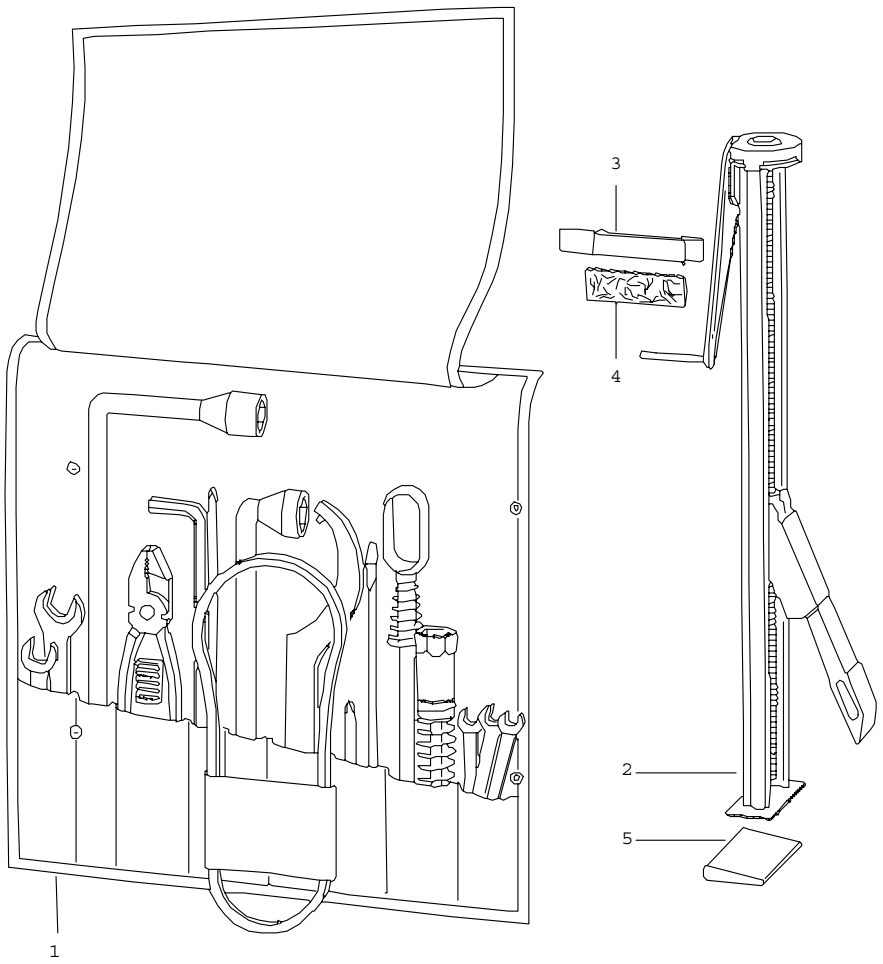

Pos	Part Number	Name	Remarks	Qty	Model
		accessories			
(1)	930 721 002 00	tool bag with contents comprising:	-79	1	TURBO
-	-	tool bag		1	
-	999 571 045 02	rim wrench		1	
-	999 195 011 02	double-end spanner 8 X 9		1	
-	999 195 012 02	double-end spanner 10 X 11		1	
-	999 195 007 02	double-end spanner 12 X 13		1	
-	999 195 014 02	double-end spanner 14 X 15		1	
-	999 195 015 02	double-end spanner 17 X 19		1	
-	999 205 003 02	tool		1	
-	999 107 003 02	universal pliers		1	
-	999 192 176 50	narrow v-belt		1	
-	911 721 013 00	bag with fuse		1 5	
-	999 571 047 02	tool		1	
-	A 477 012 203 A	spark plug wrench		1	
-	477 012 203 A	spark plug wrench		1	
-	477 012 227	angular screw driver		1	
-	911 721 107 02	screw driver		3	
(1)	911 721 002 05	tool bag with contents comprising: tool bag	-79	1 1	SC
-	999 571 045 02	rim wrench		1	
-	999 195 011 02	double-end spanner 8 X 9		1	
-	999 195 012 02	double-end spanner 10 X 11		1	

Pos	Part Number	Name	Remarks	Qty	Model
-	999 195 007 02	double-end spanner 12 X 13		1	
-	999 195 014 02	double-end spanner 14 X 15		1	
-	999 195 015 02	double-end spanner 17 X 19		1	
-	999 205 003 02	tool		1	
-	999 107 003 02	universal pliers		1	
-	999 192 097 50	narrow v-belt		1	
-	911 721 013 00	bag		1	
		with			
		fuse		5	
-	999 571 047 02	tool		1	
-	477 012 203 A	spark plug wrench		1	
-	477 012 227	angular screw driver		1	
-	911 721 107 02	screw driver		1	
(1)	911 721 002 09	tool bag	-81	1	
		with contents comprising:			
		tool bag		1	
-	477 012 203 A	spark plug wrench		1	
-	477 012 227	angular screw driver		1	
-	900 066 004 02	screw driver		1	
-	999 571 045 02	rim wrench		1	
-	999 195 011 02	double-end spanner 8 X 9		1	
-	999 195 012 02	double-end spanner 10 X 11		10	
-	999 195 013 02	double-end spanner 12 X 13		1	
-	999 195 015 02	double-end spanner 17 X 19		1	
-	999 195 014 02	double-end spanner 14 X 15		1	
-	999 205 003 02	tool		1	
-	911 721 107 02	screw driver		1	

Pos	Part Number	Name	Remarks	Qty	Model
-	999 107 003 02	universal pliers		1	
-	999 192 176 50	narrow v-belt 9,5 X 710		1	
-	911 721 013 00	bag		1	
		with			
		fuse		5	
-	911 721 231 00	angular screw driver		1	
-	911 721 235 00	extension rod		1	
-	999 571 047 02	tool		1	
(1)	911 721 002 11	tool bag	82-	1	
		with contents comprising:			
		tool bag		1	
-	477 012 203 A	spark plug wrench		1	
-	477 012 227	angular screw driver		1	
-	900 066 004 02	screw driver		1	
-	999 571 045 02	rim wrench		1	
-	999 195 011 02	double-end spanner 8 X 9		1	
-	999 195 012 02	double-end spanner 10 X 11		1	
-	999 195 013 02	double-end spanner 12 X 13		1	
-	999 195 015 02	double-end spanner 17 X 19		1	
-	999 195 014 02	double-end spanner 14 X 15		1	
-	999 571 046 02	tool		1	
-	911 721 107 02	screw driver		1	
-	999 107 004 02	universal pliers		1	
-	999 192 176 50	narrow v-belt 9,5 X 710		1	
-	911 721 013 00	bag		1	
		with			
		fuse		5	
-	911 721 231 00	angular screw driver		1	

Pos	Part Number	Name	Remarks	Qty	Model
-	911 721 235 00	extension rod		1	
-	999 571 047 02	tool		1	
		jack			
2	911 721 011 04	jack		1	
3	911 722 021 01	bracket for jack		1	
4	911 556 208 02	felt strip		1	
5	911 721 131 00	clamping piece		1	
		stickers			
-	901 701 111 05	sticker paint	-80	1	
-	900 093 001 02	t-headed screw		4	
-	911 701 127 00	sticker		1	
-	911 701 139 00	indication sticker cruise control		1	
-	911 701 171 00	sticker heating actuator		1	
-	901 006 502 00	sticker firing order	-78	1	
-	930 006 509 00	sticker firing order	79-	1	
-	901 006 503 00	sticker valve clearance		1	
-	911 006 504 01	sticker engine oil level	-80	1	TURBO
-	930 006 504 00	sticker engine oil level	-80	1	SC
-	930 006 504 02	sticker engine oil level	81-	1	
-	930 006 505 01	sticker tyre pressure		1	TURBO
-	911 006 512 11	sticker tyre pressure	-80	1	SC
-	911 006 512 14	sticker tyre pressure	81-	1	SC

Pos	Part Number	Name	Remarks	Qty	Model
-	911 701 137 02	sticker emergency wheel		1	
-	911 006 512 12	sticker tyre pressure 6 J X 16 7 J X 16	-80 /V /H	1	SC
-	911 006 512 13	sticker FUER REIFENDRUCK 6 J X 16 7 J X 16	81- /V /H	1	SC
-	930 006 513 04	sticker engine specifications	-78	1	SC,(CAL)
-	930 006 513 07	sticker engine specifications	79	1	SC,(CAL)
-	930 006 513 14	sticker engine specifications	80-	1	SC
-	930 006 513 16	sticker engine specifications	81	1	(USA)
-	930 006 513 18	sticker engine specifications	82	1	(USA)
-	930 006 513 21	sticker engine specifications	83-	1	(USA)
-	930 006 513 17	sticker engine specifications	81	1	(CAL)
-	930 006 513 19	sticker engine specifications	82	1	(CAL)
-	930 006 513 22	sticker engine specifications	83-	1	(CAL)
-	930 006 513 05	sticker engine specifications	-78	1	SC,(USA)(CDN
-	930 006 513 08	sticker engine specifications	79-	1	SC,(USA)(CDN
-	930 006 537 02	sticker engine specifications	-78	1	TURBO,(USA) (CDN)
-	930 006 537 05	sticker engine specifications	-80	1	TURBO,(USA) (CDN)
-	930 006 537 03	sticker engine specifications	-78	1	TURBO,(CAL)
-	930 006 537 06	sticker engine specifications	-80	1	TURBO,(CAL)

Pos	Part Number	Name	Remarks	Qty	Model
-	928 006 901 00	sticker drawbar load trailer coupling		1	
-	911 701 251 00	indication sticker unleaded white		1	
-	911 701 251 01	indication sticker unleaded black		1	
-	911 701 253 00	sticker unleaded		1	(CDN)
-	944 701 193 00	sticker wheel nut emergency wheel		1	
		- -- E N D -- -			

Pos	Part Number	Name	Remarks	Qty	Model

Model	Year	MG	SG	Illustration	Restrictions	Update		
911	83	0	02	2-00		203	10:47	18.08.2006

Pos	Part Number	Name	Remarks	Qty	Model
		accessories snow chains			
-	911 361 909 00	snow chains 1 set for tyre 185/70 - 15, 215/60 - 15 205/55 - 16, 225/50R 16		1	
-	928 361 047 03	wheel nut lockable 1 set		1	
-	928 361 306 03	wheel nut lockable without lock		4	
-	928 361 310 00	cap		4	
		roof rack			
-	901 801 953 00	leather strap for roof rack 1 set		1	COUPE
		ski rack			
-	928 801 011 02	cylinder lock with spring clamp - 2 - key state lock number		1	COUPE
		vertical seat adjustment			
-	911 521 493 00	spacer		X	
-	900 067 089 02	pan-head screw M 6 X 25 for 13 MM elevation		X	
-	N 014 749 2	pan-head screw M 6 X 40 for 26 MM elevation		X	
-	911 522 071 00	child car seat cushion	/L	1	
	4CR	black porsche lettering			
-	911 522 072 00	child car seat cushion	/R	1	
	4CR	black porsche lettering			

Model	Year	MG	SG	Illustration	Restrictions	Update		
911	83	0	02	2-00		203	10:47	18.08.2006

Pos	Part Number	Name	Remarks	Qty	Model
		- -- E N D -- -			

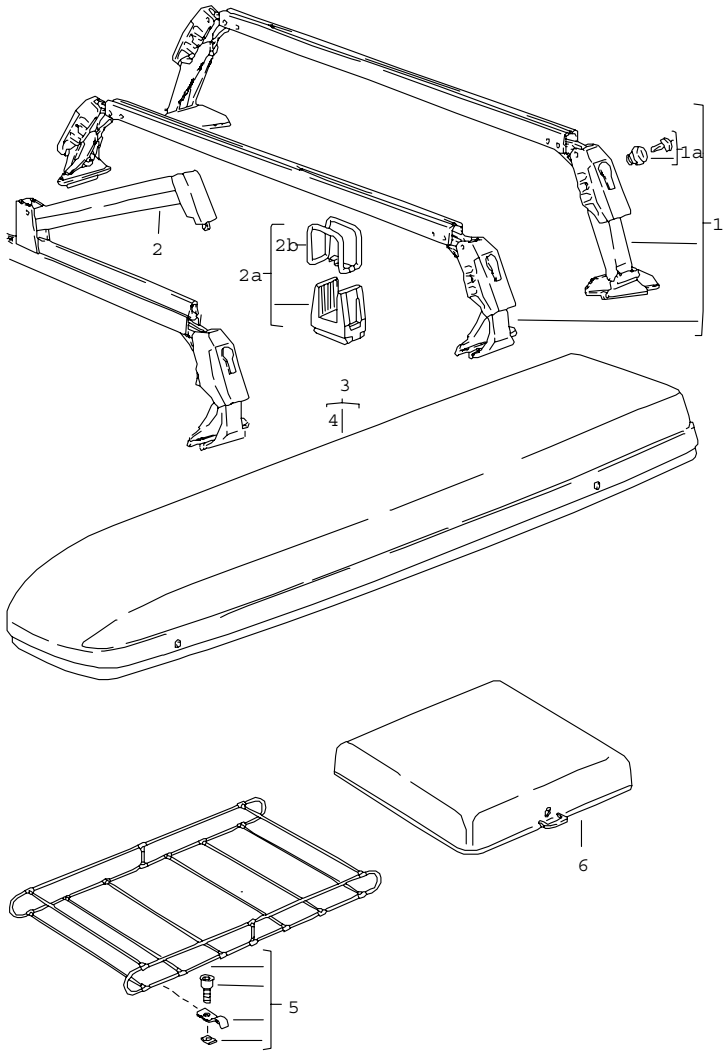

Pos	Part Number	Name	Remarks	Qty	Model
		roof transport system - 1 -			
1	911 801 055 00	set of main supports		1	COUPE
(1)	911 801 055 60	set of main supports 35 KG		1	TARGA/ CABRIO
-	911 801 275 60	desk pad for claw		2	
-	911 801 273 60	protective strip		2	TARGA
-	928 801 111 02	protection cap for lock		4	
1A	928 801 011 02	cylinder lock with spring clamp with - 2 - key state lock number		1	
2	928 801 061 02	retaining strip 1 set		1	
2A	928 801 903 02	rubber support for skis		1	
2B	928 801 193 02	retaining strap		1	
3	928 801 063 02	ski box	/L	1	COUPE
(3)	928 801 064 02	ski box	/R	1	COUPE
5	928 801 081 02	roof rack		1	
6	928 801 073 02	box for suitcase		1	COUPE
		- -- E N D -- -			

Model	Year	MG	SG	Illustration	Restrictions	Update				
911	83	0	02	2-06		203	10:48	18.08.2006	PORSCHE	PET	PORSCHE

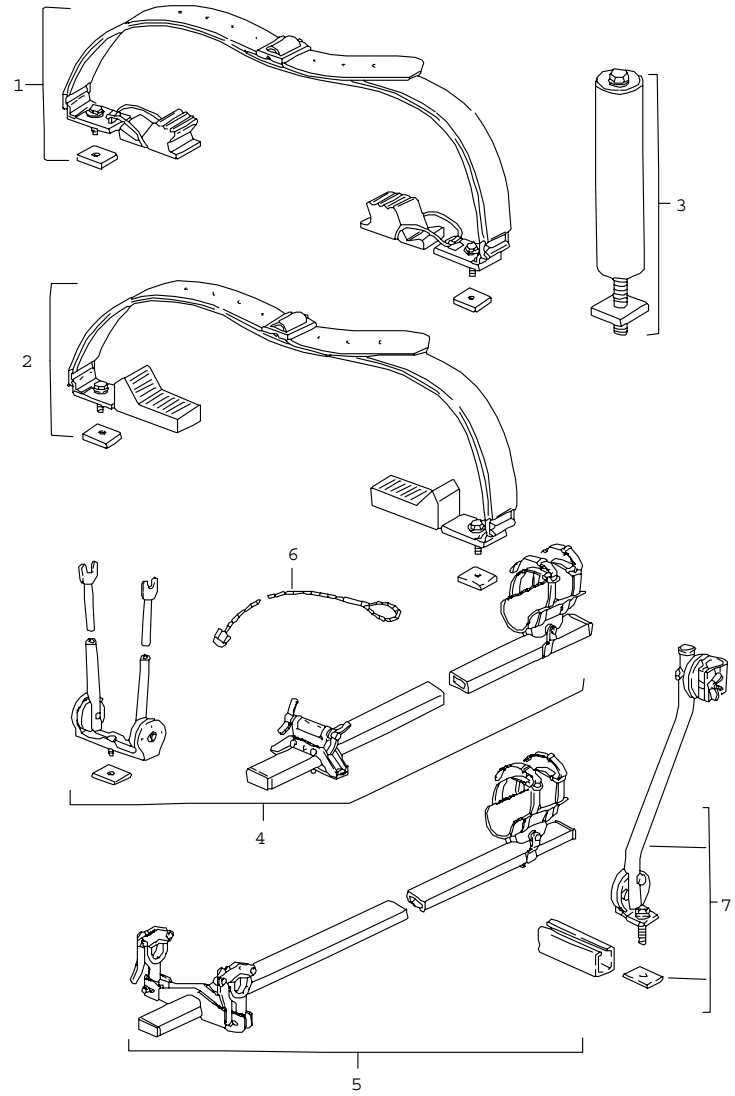

Pos	Part Number	Name	Remarks	Qty	Model
		roof transport system - 2 -			
1	928 801 019 02	set of surf board supports		1	
2	928 801 017 02	set - canoe carrier		1	COUPE
3	928 801 085 02	ladder support mandrel		X	
4	928 801 093 02	set - bike carrier for racing bike		1	
5	928 801 095 02	set - bike carrier for standard bike		1	
6	928 801 079 02	safety rope		1	
7	928 801 097 02	support for bicycle		1	
		- -- E N D -- -			

Model	Year	MG	SG	Illustration	Restrictions	Update		
911	83	0	03	3-00		203	10:48	18.08.2006

Pos	Part Number	Name	Remarks	Qty	Model
		antenna radio installation parts			
-	911 645 301 04	telescopic antenna with key		1	
-	> 911 645 033 06	antenna	-80	1	
-	> 911 645 033 04	automatic antenna	81-	1	
-	477 035 513	antenna rod for automatic antenna		1	
		radio			
>>	> 911 645 111 14	installation set for radio PORSCHE		1	
>>	> 911 645 405 02	installation set stereo rear loudspeaker only together with back wall lining for loudspeaker and door speaker comprising:	-82	1	
-	911 645 403 01	rear loudspeaker 8 OHM/ 5 W		2	
-	900 025 002 02	washer A 4,3		8	
-	N 011 004 6	hexagon nut M 4		8	
-	N 012 224 3	spring washer A 4		8	
-	911 612 067 01	wiring harness for rear loudspeaker		1	
-	911 612 095 02	wiring harness rear loudspeaker radio		1	
-	911 645 409 00	door speaker		2	
-	911 645 435 00	rear loudspeaker		2	
-	911 645 605 00	fader		1	
-	928 645 413 00	mid-range loudspeaker side trim panel		2	

Model	Year	MG	SG	Illustration	Restrictions	Update		
911	83	0	03	3-00		203	10:48	18.08.2006

Pos	Part Number	Name	Remarks	Qty	Model
-	928 645 423 00	loudspeaker grille		2	
-	900 143 132 07	tapping screw B 3,9 X 16		8	
		- -- E N D -- -			

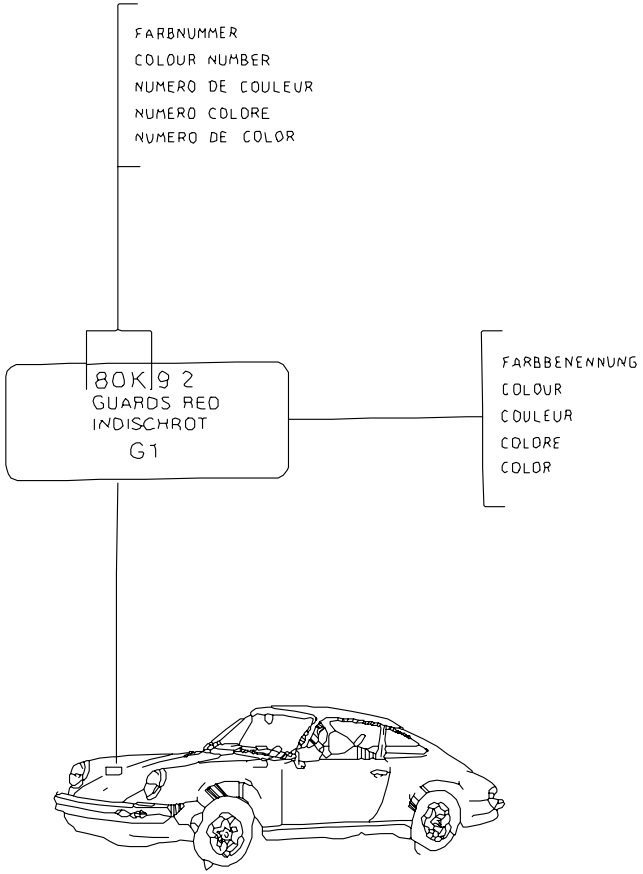

Pos	Part Number	Name	Remarks	Qty	Model
		lacquers basic materials			
-	ALN 787 003 10	polyester filler 1 KG		X	
-	ALN 787 003 20	polyester filler 2 KG		X	
-	ALZ 018 000 02	hardener for polyester filler 30 GRAMM		X	
-	L 014 200	spotting putty 1 KG		X	
-	ALN 788 007	spray filler 1 L		X	
-	ALZ 840 000 02	hardener for spray filler 25 ML		X	
-	911 096 162 04	primer R48 SUPER comprising: wash primer 2 KG hardener 1 KG		X	
-	911 096 310 06	thinner for wash primer 1 L		X	
-	ALN 786 000 13	acrylic primer filler 3 L		X	
-	ALZ 009 001 06	hardener for primer filler long 500 ML		X	
-	ALZ 009 002 06	hardener for primer filler short 500 ML		X	
-	ALV 855 000 15	thinner for primer filler 5 L		X	

Pos	Part Number	Name	Remarks	Qty	Model
-	ALN 790 000 13	acrylic primer filler HIGH SOLID 3 L		X	
-	999 915 330 40	high build coating EPOXY F90 1 L		X	
-	999 901 010 40	hardener for high build coating F 90 1 L		X	
-	999 901 008 40	polyurethane prime coat 1 L		X	
-	999 901 009 40	hardener for polyurethane prime coat 1 L		X	
-	911 096 330 03	thinner for polyurethane prime coat 1 L		X	
-	911 096 271 05	polyurethane plastic putty 500 GR		X	
-	999 901 012 40	underbody protection underbody protection white 1 L		X	
-	999 901 011 40	underbody protection underbody protection grey 1 L		X	
-	L 016 006	nitro-cellulose thinner 2,5 L		X	
-	000 043 001 00	tin SN 90 %, 300 G		X	
-	911 095 903 80	synthetic resin prime coat 1 L		X	
	265	oak green metallic			265
	275	LINDGRUEN-METALLIC			275
	30T	light blue metallic			30T
	304	minerva blue			304
	376	PETROLBLAU-METALLIC			376

Pos	Part Number	Name	Remarks	Qty	Model
	443	BRAUN-KUPFER-DIAMANT			443
	463	casablanca beige metallic			463
	464	tobacco metallic			464
	708	black-metallic			708
	936	silver metallic			936
	20C	moss green metallic			20C
	31G	PAZIFICBLAU-METALLIC			31G
	474	PALISANDER-METALLIC			474
	655	platinum-metallic			655
	895	burgundy-metallic			895
	956	zinc metallic			956
	961	meteor metallic			961
	655	platinum-metallic			655
	661	SCHIEFERBLAU-METALLIC			661
	662	RAUCHQUARZ-METALLIC			662
	810	ruby red metallic			810
	811	ZIEGELROT-METALLIC			811
	20C	moss green metallic			20C
-	911 096 320 00	thinner for synthetic resin lacquer		X	
-	911 095 902 60	top-coat paint 1 L		X	
	027	guards red			027
	106	talbot yellow			106
	107	CONTINENTAL ORANGE			107
	260	DAPHNEGRUEN			260
	273	fern green			273
	274	olive green			274
	305	arrow blue			305
	408	bitter chocolate			408

Pos	Part Number	Name	Remarks	Qty	Model
	451	mocha black			451
	502	cashmere beige			502
	700	black			700
	908	grand prix white			908
	601	flieder			601
	20A	mint green			20A
	182	CHIFFONWEISS			182
	523	bamboo beige			523
	524	caramel			524
	32Z	GLETSCHERBLAU			32Z
-	ALN 769 000 10	clear lacquer 1 L		X	
-	ALV 855 000 15	thinner for 2k - acryl lacquer 5L		X X	
-	911 095 932 20	paint touch-up applicator		X	
	027	guards red			027
	106	talbot yellow			106
	107	CONTINENTALORANGE			107
	260	DAPHNEGRUEN			260
	265	oak green metallic			265
	273	fern green			273
	274	olive green			274
	304	minerva blue			304
	305	arrow blue			305
	408	bitter chocolate			408
	451	mocha black			451
	502	cashmere beige			502
	700	black			700
	908	grand prix white			908
	601	flieder			601

Pos	Part Number	Name	Remarks	Qty	Model
	20A	mint green			20A
	182	CHIFFONWEISS			182
	523	bamboo beige			523
	524	caramel			524
	32Z	GLETSCHERBLAU			32Z
-	911 095 933 20	paint touch-up applicator set comprising: paint touch-up applicator top-coat paint paint touch-up applicator clear lacquer		X	
	20C	moss green metallic			20C
	275	LINDGRUEN - METALLIC			275
	376	petrol blue			376
	443	BRAUN-KUPFER-DIAMANT			443
	936	silver metallic			936
	30T	light blue metallic			30T
	463	casablanca beige metallic			463
	464	tobacco metallic			464
	708	black-metallic			708
	31G	PAZIFICBLAU - METALLIC			31G
	474	PALISANDER - METALLIC			474
	655	platinum-metallic			655
	895	burgundy-metallic			895
	956	zinc metallic			956
	661	SCHIEFERBLAU - METALLIC			661
	662	RAUCHQUARZ - METALLIC			662
	810	ruby red metallic			810
	811	ZIEGELROT - METALLIC			811
		hardener			

Pos	Part Number	Name	Remarks	Qty	Model	Pos	Part Number	Name	Remarks	Qty	Model
-	911 096 220 05	hardener LESONAL 500 ML		X							
-	911 096 220 02	hardener GLASURIT 500 ML		X							
-	911 096 220 12	hardener for clear lacquer 500 ML		X							
-	911 096 300 17	thinner for black mat 1 KG		X	TURBO						
		- -- E N D -- -									

Model	Year	MG	SG	Illustration	Restrictions	Update		
911	83	0	05	5-00		203	10:48	18.08.2006

Pos	Part Number	Name	Remarks	Qty	Model
		securing liquid sealing compound preservative agent			
		securing liquid			
-	928 101 921 00	loctite -270- 10 CCM high strength		X	
-	000 043 012 00	loctite -221- 10 CCM low strength		X	
		sealing compound			
-	000 043 010 00	loctite -574- 50 CCM		X	
-	000 043 011 00	loctite -638- 10 CCM for balance shaft		X	
-	000 043 013 00	loctite adhesive remover -80646- spraying can		X	
-	AMV 176 000 05	adhesive sealing compound 310 CCM		1	
		loctite for pasting metal glass ceramics thermoset plastic adhesive set comprising:		X	
-	000 043 051 00	adhesive loctite -317- 50 CCM		X	
-	000 043 202 65	loctite AKTIVATOR NF 736 180 CCM		X	
-	000 043 019 01	sealing compound SILASTIK 730 RTV 90 CCM		X	
-	000 043 004 00	mounting paste optimoly ht 1 90-g tube		X	

Model	Year	MG	SG	Illustration	Restrictions	Update		
911	83	0	05	5-00		203	10:48	18.08.2006

Pos	Part Number	Name	Remarks	Qty	Model
-	000 043 020 00	optimoly mounting paste OPTIMOLY - TA 1 tube 100 g silver		X	
-	000 043 110 01	grease OPTITEMP PU35 1 tube 100 G		X	
-	000 043 204 21	grease for lock cylinder spraying can preservative agent		X	
-	999 571 062 00	care kit comprising: suitcase		1	
-	999 901 013 40	liquid preservative		1	
-	999 901 014 41	cleaning agents		1	
-	999 901 015 40	polisher		1	
-	999 901 016 40	tar remover		1	
-	999 901 017 40	dashboard cleaner		1	
-	999 901 018 40	paint polish		1	
-	999 901 019 41	insect remover		1	
-	999 901 020 40	spot remover		1	
-	999 901 021 40	polishing cotton		1	
-	999 901 022 40	polishing cloth		1	
-	000 044 000 02	preservative agent 250 ML		X	
-	999 901 017 41	window cleaner summer 250 ML		X	
-	999 901 033 40	window cleaner winter 1000 ML		X	
-	999 901 036 40	car shampoo refilling bottle 1000 ML		X	
-	999 917 803 00	window cleaner spray bottle 250 ML		X	

Model	Year	MG	SG	Illustration	Restrictions	Update		
911	83	0	05	5-00		203	10:48	18.08.2006

Pos	Part Number	Name	Remarks	Qty	Model
-	928 628 931 00	silicone remover 1000 ML		X	
-	999 901 030 40	rim cleaner spray bottle 500 ML		X	
-	999 901 031 40	rim cleaner refilling bottle 1000 ML		X	
		- -- E N D -- -			

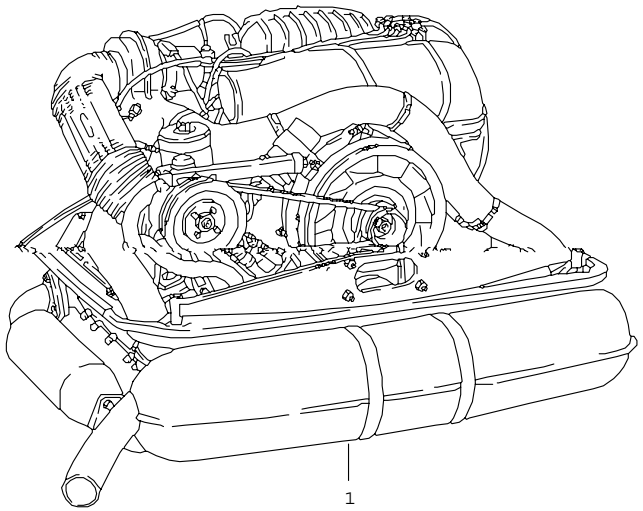

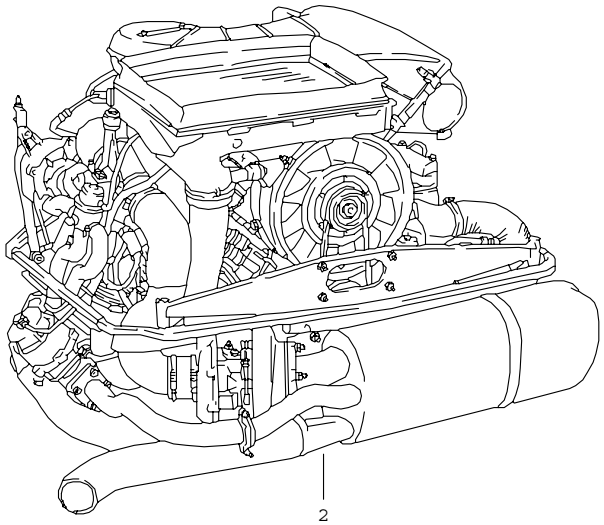

Pos	Part Number	Name	Remarks	Qty	Model
		replacement engine			
1	930 100 204 00	engine		1	930.04 (USA) (CDN) COUPE/TARGA
1	930 100 205 00	engine		1	930.05 (J) COUPE/TARGA
1	930 100 206 00	engine		1	930.06 CALIFORNIA COUPE/TARGA
1	930 100 207 00	engine		1	930.07 (USA) (CDN) COUPE/TARGA
1	930 100 208 00	engine		1	930.08 (J) COUPE/TARGA
1	930 100 215 00	engine		1	930.15 (J) COUPE/TARGA
1	930 100 216 00	engine		1	930.16 (USA) COUPE/TARGA
1	930 100 216 01	engine		1	930.16(USA) CABRIO
1	930 100 217 00	engine		1	930.17 (J) COUPE/TARGA
1	930 100 217 01	engine		1	930.17(J) CABRIO
2	> 930 100 260 00	engine		1	930.60
2	930 100 261 00	engine		1	930.61 (USA) (CDN)
2	930 100 262 00	engine		1	930.62 (J)
2	930 100 263 00	engine		1	930.63 CALIFORNIA
2	930 100 264 00	engine		1	930.64 (USA) (CDN)
2	930 100 265 00	engine		1	930.65 (J)
2	> 930 100 266 04	engine		1	930.66
		- -- E N D -- -			

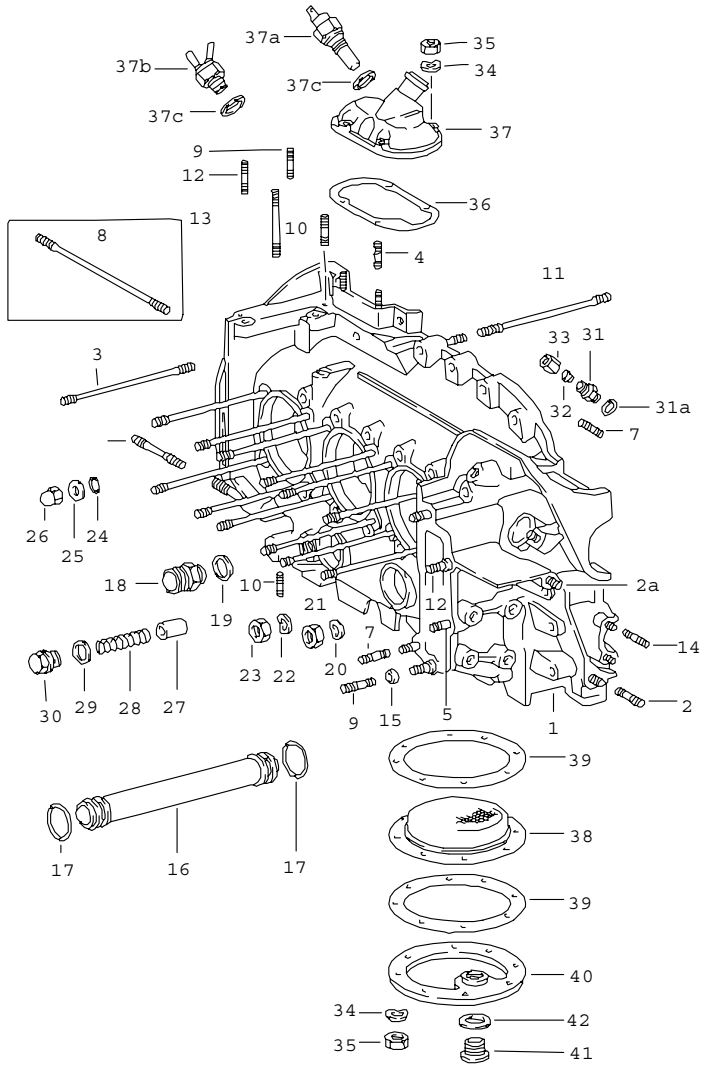

Pos	Part Number	Name	Remarks	Qty	Model
		crankcase left			
1	930 101 915 00	crankcase with studs M >> 63D 4069 M >> 64D 3716 M >> 63D 8154 M >> 67D 0711		1	SC
1	930 101 917 00	crankcase with studs M 63D 4070 >> M 64D 3717 >> M 63D 8155 >> M 67D 0712 >>		1	SC
1	930 101 916 00	crankcase with studs M >> 63D 4069 M >> 64D 3716 M >> 63D 8154 M >> 67D 0711		1	TURBO
1	930 101 918 00	crankcase with studs M 63D 4070 >> M 64D 3717 >> M 63D 8155 >> M 67D 0712 >>		1	TURBO
2	999 062 090 02	stud M 10 X 40 M >> 63D 4069 M >> 64D 3716 M >> 63D 8154 M >> 67D 0711		1	SC
2	999 062 207 02	stud M 10 X 45 M >> 63D 4069 M >> 64D 3716 M >> 63D 8154 M >> 67D 0711		1	TURBO
2/A	999 062 039 02	stud M 10 X 50 M >> 63D 4069 M >> 64D 3716 M >> 63D 8154 M >> 67D 0711		1	SC
2/A	999 062 060 02	stud M 10 X 80 M >> 63D 4069 M >> 64D 3716 M >> 63D 8154 M >> 67D 0711		1	TURBO

Pos	Part Number	Name	Remarks	Qty	Model
3	911 101 172 00	stud upper		12	SC
3	A 930 101 170 00	stud (DILAVAR) lower		12	SC
3	993 101 170 51	stud lower		12	SC
3	A 930 101 170 00	stud (DILAVAR)		24	TURBO
3	993 101 170 51	stud		24	TURBO
4	999 062 085 02	stud M 6 X 20		4	
5	999 062 006 02	stud M 8 X 20		2	
6	999 061 034 02	stud M 10 X 67		2	SC
6	999 062 192 02	stud M 10 X 122		1	TURBO
(6)	999 062 099 02	stud M 10 X 105		1	TURBO
7	999 062 007 02	stud M 8 X 20		5	
8	999 062 099 02	stud M 10 X 105	SPM	2	SC
9	999 062 009 02	stud M 8 X 28		3	
10	999 062 055 02	stud M 6 X 12		4	
11	930 101 174 01	stud		2	
12	999 062 008 02	stud M 8 X 25		3	
13	999 062 147 02	stud M 8 X 62		1	
14	999 062 002 02	stud M 6 X 15 M >> 63D 4069 M >> 64D 3716 M >> 63D 8154 M >> 67D 0711		3	
15	901 101 145 00	dowel sleeve		2	
16	901 107 351 01	oil tube		4	
16	930 107 040 00	oil tube divided set comprising: oil tube oil tube		X 1 1	
-	A 900 041 013 01	circlip		1	
-	900 041 013 01	circlip		1	
-	999 707 113 40	round seal		2	
-	999 707 112 40	round seal		2	
17	* 999 707 112 40	round seal		8	
18	999 136 008 09	connection piece		1	
19	* 900 123 011 30	sealing ring A 22 X 27		1	
-	911 101 011 01	splash valve		3	SC
-	930 101 015 00	splash valve		3	TURBO
20	900 031 014 30	washer 8,4		24	
21	900 910 022 02	lock nut M 8		24	
22	N 012 242 3	spring washer B 10 X 18		1	
23	900 076 052 02	hexagon nut M 10 X 1		1	
24	* 999 701 006 40	o-ring		12	
25	901 101 161 01	washer		12	
26	930 101 172 01	cap nut		13	
27	911 107 512 00	piston		1	
28	901 107 531 00	compression spring		1	
29	900 123 106 30	sealing ring A 18 X 24		1	
30	999 064 026 02	screw plug		1	
31	901 107 375 00	screw socket		1	

Pos	Part Number	Name	Remarks	Qty	Model
31A	* 900 123 101 30	sealing ring A 12 X 18		1	
32	A N 020 825 1	cutting ring LL 8		1	
32	N 020 825 1	cutting ring LL 8		1	
33	900 104 003 02	union nut A II 8		1	
34	N 012 226 5	spring washer B 6 M >> 63D 4069 M >> 64D 3716 M >> 63D 8154 M >> 67D 0711		12	
35	900 076 010 02	hexagon nut M 6 M >> 63D 4069 M >> 64D 3716 M >> 63D 8154 M >> 67D 0711		12	
36	* 930 107 791 00	gasket		1	
37	901 107 073 02	cover	-80	1	SC (USA)
37	930 107 073 00	cover	81-	1	SC (USA)
37	901 107 073 02	cover	-82	1	TURBO
37	930 107 073 00	cover	83-	1	TURBO
37A	930 606 117 01	temperature switch	81-	1	SC USA
37B	930 110 401 01	thermo valve	83-	1	TURBO
37C	900 123 008 30	sealing ring A 14 X 20	81-	1	SC USA
37C	900 123 007 30	sealing ring A 14 X 18	83-	1	TURBO
38	930 107 314 00	oil strainer M >> 63D 4069 M >> 64D 3716 M >> 63D 8154 M >> 67D 0711		1	SC
(38)	930 107 313 01	oil strainer M >> 63D 4069 M >> 64D 3716 M >> 63D 8154 M >> 67D 0711		1	TURBO

Pos	Part Number	Name	Remarks	Qty	Model
39	* 930 101 391 01	gasket M >> 63D 4069 M >> 64D 3716 M >> 63D 8154 M >> 67D 0711		2	
40	A 930 101 902 00	cover M >> 63D 4069 M >> 64D 3716 M >> 63D 8154 M >> 67D 0711		1	
(40)	930 101 902 00	cover		1	
41	A 911 107 176 03	screw plug M >> 63D 4069 M >> 64D 3716 M >> 63D 8154 M >> 67D 0711		1	
41	911 107 176 03	screw plug M >> 63D 4069 M >> 64D 3716 M >> 63D 8154 M >> 67D 0711			
41	A 944 107 197 01	screw plug M 63D 4070 >> M 64D 3717 >> M 63D 8155 >> M 67D 0712 >>		1	
41	944 107 197 01	screw plug		1	B
42	* 900 123 011 20	sealing ring A 22 X 27 M >> 63D 4069 M >> 64D 3716 M >> 63D 8154 M >> 67D 0711		1	
42	900 123 118 30	sealing ring A 22 X 27 M 63D 4070 >> M 64D 3717 >> M 63D 8155 >> M 67D 0712 >>		1	

- -- E N D -- -

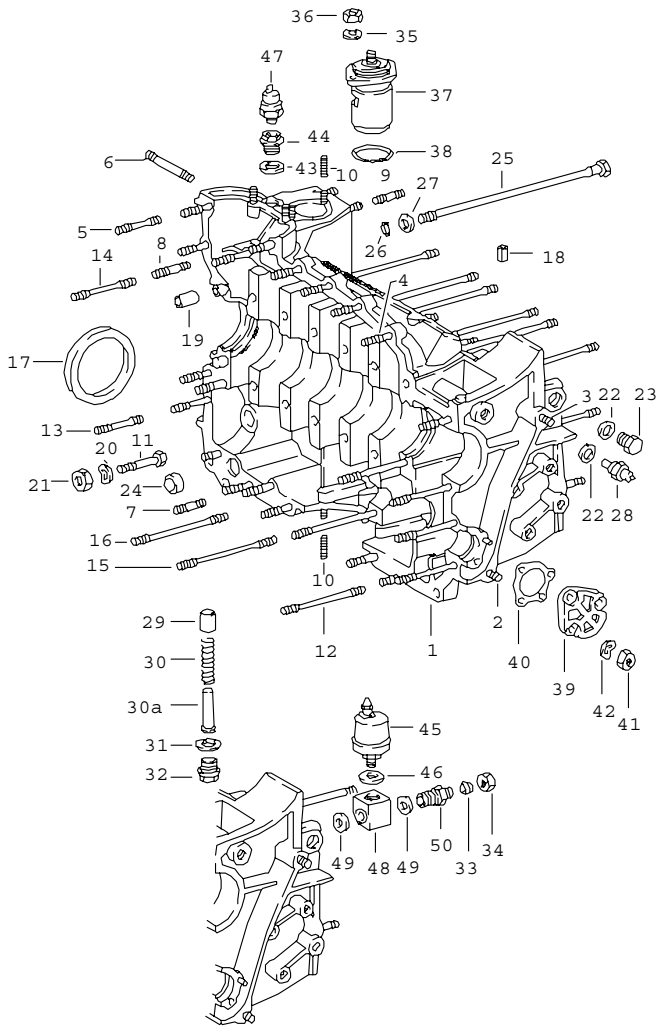

Pos	Part Number	Name	Remarks	Qty	Model
		crankcase right			
1	930 101 915 00	crankcase with studs M >> 63D 4069 M >> 64D 3716 M >> 63D 8154 M >> 67D 0711		1	SC
1	930 101 917 00	crankcase with studs M 63D 4070 >> M 64D 3717 >> M 63D 8155 >> M 67D 0712 >>		1	SC
1	930 101 916 00	crankcase with studs M >> 63D 4069 M >> 64D 3716 M >> 63D 8154 M >> 67D 0711		1	TURBO
1	930 101 918 00	crankcase with studs M 63D 4070 >> M 64D 3717 >> M 63D 8155 >> M 67D 0712 >>		1	TURBO
2	999 062 090 02	stud M 10 X 40 M >> 63D 4069 M >> 64D 3716 M >> 63D 8154 M >> 67D 0711		1	SC
2	999 062 207 02	stud M 10 X 45 M >> 63D 4069 M >> 64D 3716 M >> 63D 8154 M >> 67D 0711		1	TURBO
3	999 061 056 02	stud M 10 X 45 M >> 63D 4069 M >> 64D 3716 M >> 63D 8154 M >> 67D 0711		1	
4	999 062 010 02	stud M 8 X 35		1	
5	999 062 115 02	stud M 8 X 32		13	

Pos	Part Number	Name	Remarks	Qty	Model
6	999 062 192 02	stud M 10 X 102		1	SC
(6)	999 062 191 02	stud M 10 X 145	SPM	1	SC
(6)	999 062 225 02	stud BM 10 X 140		1	TURBO
7	999 062 006 02	stud M 8 X 20		3	
8	999 062 009 02	stud M 8 X 28		1	
9	999 062 073 02	stud M 8 X 15		4	
10	999 062 055 02	stud M 6 X 12 M >> 63D 4069 M >> 64D 3716 M >> 63D 8154 M >> 67D 0711		7	
11	900 074 134 02	hexagon-head bolt M 8 X 45		1	
12	N 014 432 4	stud M 8 X 78		3	
13	999 062 075 02	stud M 8 X 48		2	
14	999 062 138 02	stud M 8 X 52		1	
15	999 062 051 02	stud M 8 X 108		1	
16	930 101 175 00	stud		1	
17	* 999 113 264 40	radial sealing ring		1	
18	900 095 025 01	roll pin 8 X 16		1	
19	901 101 195 00	dowel sleeve		2	
20	* 900 031 014 30	washer 8,4		1	
21	900 910 022 02	lock nut M 8		1	
22	* 900 123 007 30	sealing ring 14 X 18		1	
23	900 124 002 02	screw plug AM 14 X 1,5	SPM	1	SC
24	* 999 704 172 50	sealing ring		1	
25	A 930 101 173 02	screw	-81	11	
25	930 101 173 02	screw		11	
26	* 999 701 006 40	o-ring		12	
27	901 101 161 01	washer		12	
-	911 101 011 01	splash valve		3	SC
-	930 101 015 00	splash valve		3	TURBO
28	901 641 632 00	remote temperature sensor	SPM	1	SC
28	911 606 112 00	remote temperature sensor		1	
29	911 107 512 00	piston		1	
30	930 107 531 01	compression spring		1	
30A	930 107 533 00	guide sleeve		1	
31	900 123 106 30	sealing ring A 18 X 24		1	
32	A 999 064 026 02	screw plug	-80	1	
32	999 064 026 02	screw plug		1	
33	N 020 825 1	cutting ring LL 8		1	
34	900 104 003 02	union nut A II 8		1	
35	N 012 226 5	spring washer B 6		2	
36	900 076 010 02	hexagon nut M 6		2	
37	930 107 765 00	oil thermostat		1	
38	* 999 701 053 40	o-ring 39,2 X 3		1	
39	911 105 162 00	cover M >> 63D 4069 M >> 64D 3716 M >> 63D 8154 M >> 67D 0711		1	

Pos	Part Number	Name	Remarks	Qty	Model
(39)	930 105 165 00	cover M 63D 4070 >> M 64D 3717 >> M 63D 8155 >> M 67D 0712 >>		1	
40	* 930 105 198 01	gasket M >> 63D 4069 M >> 64D 3716 M >> 63D 8154 M >> 67D 0711		1	
(40)	999 701 658 40	round seal 33,3 X 2,4 M 63D 4070 >> M 64D 3717 >> M 63D 8155 >> M 67D 0712 >>		1	
41	900 910 012 02	lock nut M 6 M >> 63D 4069 M >> 64D 3716 M >> 63D 8154 M >> 67D 0711		3	
41	900 075 057 02	hexagon-head bolt M 6 X 16 M 63D 4070 >> M 64D 3717 >> M 63D 8155 >> M 67D 0712 >>		2	
42	* 900 031 011 30	washer 6,4		3	
43	* 900 123 140 30	sealing ring A 18 X 22		1	
44	901 101 175 01	adapter		1	SC
(44)	930 107 705 00	reducing socket		1	TURBO
45	911 606 111 01	pressure transmitter		1	
46	* 900 123 009 20	sealing ring		1	
47	A 911 606 230 00	oil pressure switch	-79	1	
47	911 606 230 00	oil pressure switch	80-	1	
48	911 107 704 00	connection piece		1	
49	* 900 123 101 30	sealing ring A 12 X 18		2	
50	911 107 709 01	screw socket		1	
-	900 108 022 00	ball $ 9 MM - -- E N D -- -		1	TURBO

Model	Year	MG	SG	Illustration	Restrictions	Update			
911	83	1	02	102-00		203	10:49	18.08.2006	PORSCHE PET PORSCHE

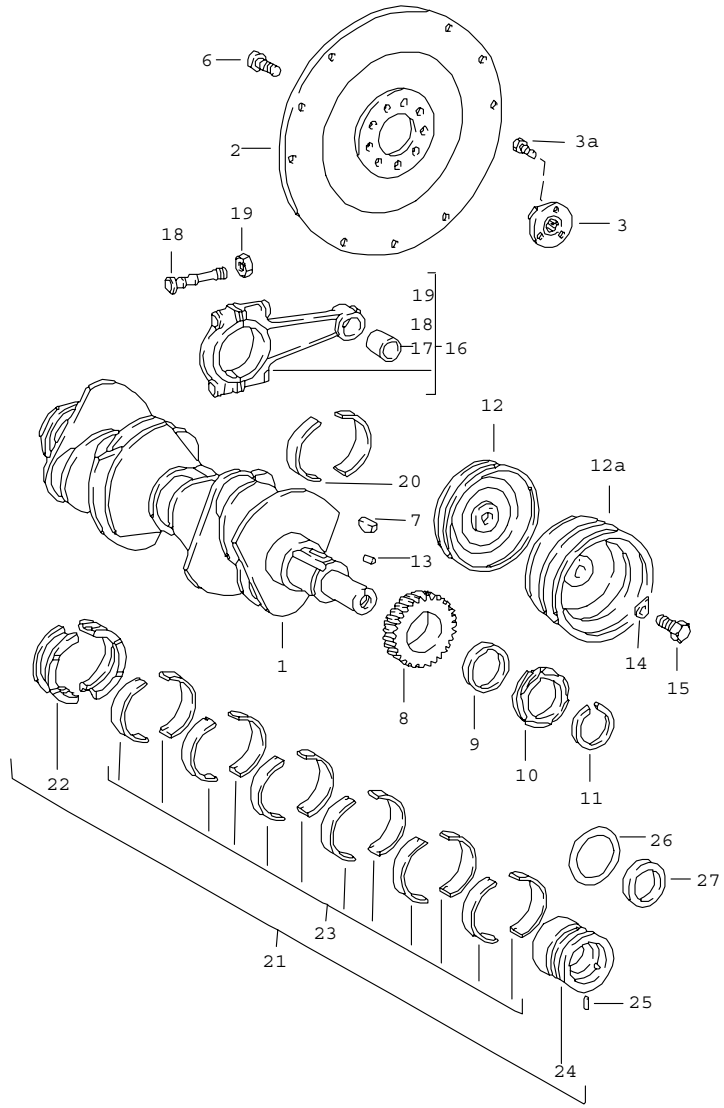

Pos	Part Number	Name	Remarks	Qty	Model
		crankshaft			
1	> 930 102 015 01	crankshaft	-79	1	SC
		M >> 639 4605			SC
		M >> 629 2280			SC
		M >> 619 0293			SC
		M >> 659 1575			SC
		M >> 679 0895			TURBO
		M >> 689 1231			TURBO
		M >> 689 0504			TURBO
1	> 930 102 015 05	crankshaft	80-	1	SC
		M 639 4606 >>			SC
		M 629 2281 >>			SC
		M 619 0294 >>			SC
		M 659 1576 >>			SC
		M 679 0896 >>			TURBO
		M 689 1232 >>			TURBO
		M 689 0505 >>			TURBO
1	> 930 102 014 00	crankshaft	-79	1	TURBO
		M >> 639 4605			SC
		M >> 629 2280			SC
		M >> 619 0293			SC
		M >> 659 1575			SC
		M >> 679 0895			TURBO
		M >> 689 1231			TURBO
		M >> 689 0504			TURBO
1	A 930 102 014 10	crankshaft	80-	1	TURBO
		M 639 4606 >>			SC
		M 629 2281 >>			SC
		M 619 0294 >>			SC
		M 659 1576 >>			SC
		M 679 0896 >>			TURBO
		M 689 1232 >>			TURBO
		M 689 0505 >>			TURBO
1	930 102 014 10	crankshaft	80-	1	TURBO
		M 639 4606 >>			SC
		M 629 2281 >>			SC
		M 619 0294 >>			SC
		M 659 1576 >>			SC
		M 679 0896 >>			TURBO
		M 689 1232 >>			TURBO
		M 689 0505 >>			TURBO
2	> 930 102 204 00	flywheel	-79	1	SC
		M >> 639 4605			SC
		M >> 629 2280			SC
		M >> 619 0293			SC
		M >> 659 1575			SC
		M >> 679 0895			TURBO
		M >> 689 1231			TURBO
		M >> 689 0504			TURBO

Pos	Part Number	Name	Remarks	Qty	Model
2	> 930 102 215 00	flywheel	80-	1	SC
		M 639 4606 >>			SC
		M 629 2281 >>			SC
		M 619 0294 >>			SC
		M 659 1576 >>			SC
		M 679 0896 >>			TURBO
		M 689 1232 >>			TURBO
		M 689 0505 >>			TURBO
2	> 930 102 202 01	flywheel	-79	1	TURBO
		M >> 639 4605			SC
		M >> 629 2280			SC
		M >> 619 0293			SC
		M >> 659 1575			SC
		M >> 679 0895			TURBO
		M >> 689 1231			TURBO
		M >> 689 0504			TURBO
2	> 930 102 213 00	flywheel	80-	1	TURBO
		M 639 4606 >>			SC
		M 629 2281 >>			SC
		M 619 0294 >>			SC
		M 659 1576 >>			SC
		M 679 0896 >>			TURBO
		M 689 1232 >>			TURBO
		M 689 0505 >>			TURBO
3	901 102 025 01	bush	-79	1	SC
		M >> 639 4605			SC
		M >> 629 2280			SC
		M >> 619 0293			SC
		M >> 659 1575			SC
		M >> 679 0895			TURBO
		M >> 689 1231			TURBO
		M >> 689 0504			TURBO
3	930 102 025 00	bush	-79	1	TURBO
		M >> 639 4605			SC
		M >> 629 2280			SC
		M >> 619 0293			SC
		M >> 659 1575			SC
		M >> 679 0895			TURBO
		M >> 689 1231			TURBO
		M >> 689 0504			TURBO
3	930 102 042 00	bush	80-	1	
		M 639 4606 >>			SC
		M 629 2281 >>			SC
		M 619 0294 >>			SC
		M 659 1576 >>			SC
		M 679 0896 >>			TURBO
		M 689 1232 >>			TURBO
		M 689 0505 >>			TURBO

Pos	Part Number	Name	Remarks	Qty	Model
3A	900 067 008 02	pan-head screw		3	
		M 6 X 12			
		M 639 4606 >>			SC
		M 629 2281 >>			SC
		M 619 0294 >>			SC
		M 659 1576 >>			SC
		M 679 0896 >>			TURBO
		M 689 1232 >>			TURBO
		M 689 0505 >>			TURBO
6	930 102 206 00	pan-head screw		9	
7	901 102 147 00	woodruff key		1	
8	901 102 111 00	timing gear		1	
		(KENNZAHL) 0			
(8)	901 102 111 10	timing gear		1	
		(KENNZAHL) 1			
9	901 102 145 00	intermediate ring		1	
10	930 102 115 01	drive wheel		1	
11	901 102 148 00	circlip		1	
		(KENNZAHL 0)			
11	901 102 148 01	circlip		1	
		(KENNZAHL 1)			
11	901 102 148 02	circlip		1	
		(KENNZAHL 2)			
11	901 102 148 03	circlip		1	
		(KENNZAHL 3)			
12	A 930 102 028 01	pulley	-79	1	SC
12	930 102 028 01	pulley	-79	1	SC
12	A 930 102 028 04	pulley	80-82	1	SC (J)
12	930 102 028 04	pulley	80-82	1	SC (J)
12	A 930 102 028 07	pulley	83-	1	SC (J)
12	930 102 028 07	pulley	83-	1	SC (J)
12	930 102 126 02	pulley		1	TURBO
12A	930 102 023 01	pulley	-79 6/15	1	SC M 559 M930.04/05/0
12A	930 102 023 03	pulley	80- 6/17	1	SC M 559 M930.07/08/1
12A	930 102 017 04	pulley		1	TURBO M 559

Pos	Part Number	Name	Remarks	Qty	Model
13	A N 101 090 01	straight pin 5 M 6 X 12		1	
13	N 101 090 01	straight pin 5 M 6 X 12		1	
14	A 900 028 014 01	spring washer B 12	-80	1	
14	900 028 014 02	spring washer B 12	-80	1	
15	999 093 005 02	hexagon-head bolt M12 X 1,5 X 22		1	
		connecting rod			SC
16	930 103 015 51	connecting rod weight group: 1= 633 - 642 G		6	
16	930 103 015 52	connecting rod weight group: 2= 642 - 651 G		6	
16	930 103 015 53	connecting rod weight group: 3= 651 - 660 G		6	
16	930 103 015 54	connecting rod weight group: 4= 660 - 669 G		6	
16	930 103 015 55	connecting rod weight group: 5= 669 - 678 G		6	
16	930 103 015 56	connecting rod weight group: 6= 678 - 687 G		6	
16	930 103 015 57	connecting rod weight group: 7= 687 - 696 G		6	
16	930 103 015 58	connecting rod weight group: 8= 696 - 705 G		6	
16	930 103 015 59	connecting rod weight group: 9= 705 - 714 G		6	
-	930 103 974 00	1 set connecting rods comprising: 6 connecting rods		1	SC
		connecting rod			TURBO
(16)	930 103 020 73	connecting rod weight group: 3 = 615 - 624 G		6	
(16)	930 103 020 74	connecting rod weight group: 4 = 624 - 633 G		6	
(16)	930 103 020 75	connecting rod weight group: 5 = 633 - 642 G		6	
(16)	930 103 020 76	connecting rod weight group: 6 = 642 - 651 G		6	
(16)	930 103 020 77	connecting rod weight group: 7 = 651 - 660 G		6	
(16)	930 103 020 78	connecting rod weight group: 8 = 660 - 669 G		6	
(16)	930 103 020 79	connecting rod weight group: 9 = 669 - 678 G		6	
(16)	930 103 020 80	connecting rod weight group: 10 = 678 - 687 G		6	
(16)	930 103 020 81	connecting rod weight group: 11 = 687 - 696 G		6	
-	930 103 975 00	connecting rod 1 set comprising: 6 connecting rods		1	TURBO
17	901 103 131 01	connecting rod bush		6	SC
17	930 103 134 01	connecting rod bush		6	TURBO
18	914 103 171 00	connecting rod bolt		12	SC
18	964 103 176 00	connecting rod bolt		12	TURBO
19	901 103 173 00	connecting rod nut		12	SC
19	930 103 174 00	connecting rod nut		12	TURBO
20	930 103 148 00	connecting-rod bearing		12	SC

Pos	Part Number	Name	Remarks	Qty	Model
20	930 103 148 50	connecting-rod bearing oversize 0,25 MM		12	SC
20	930 103 148 60	connecting-rod bearing oversize 0,50 MM		12	SC
20	930 103 148 70	connecting-rod bearing oversize 0,75 MM		12	SC
20	930 103 148 80	connecting-rod bearing oversize 1,00 MM		12	SC
20	930 103 147 15	connecting-rod bearing		12	TURBO
20	930 103 147 50	connecting-rod bearing oversize 0,25 MM		12	TURBO
20	930 103 147 60	connecting-rod bearing oversize 0,50 MM		12	TURBO
20	930 103 147 70	connecting-rod bearing oversize 0,75 MM		12	TURBO
20	930 103 147 80	connecting-rod bearing oversize 1,00 MM		12 12	TURBO TURBO
21	930 101 901 00	set of crankshaft bearings comprising:		1	
22	930 101 131 15	bearing shell I		2	
23	930 101 132 15	bearing shell II-VII		12	
24	964 101 138 01	bearing sleeve VIII		1	
21	930 101 901 51	set of crankshaft bearings oversize 0,25 mm inner comprising:		1	
22	930 101 131 51	bearing shell I		2	
23	930 101 132 51	bearing shell II-VII		12	
24	964 101 138 54	bearing sleeve VIII		1	
21	930 101 901 56	set of crankshaft bearings oversize 0,50 mm outer comprising:		1	
22	930 101 131 56	bearing shell I		2	
23	930 101 132 56	bearing shell II-VII		12	
24	964 101 138 55	bearing sleeve VIII		1	
21	930 101 901 66	set of crankshaft bearings oversize 0,75 MM inner comprising:		1	
22	930 101 131 66	bearing shell I		2	
23	930 101 132 66	bearing shell II-VII		12	
24	930 101 138 68	bearing sleeve VIII		1	
21	930 101 901 70	set of crankshaft bearings oversize 1,00 MM inner comprising:		1	
22	930 101 131 70	bearing shell I		2	
23	930 101 132 70	bearing shell II-VII		12	
24	930 101 138 69	bearing sleeve VIII		1	
21	930 101 901 61	set of crankshaft bearings oversize 0,25 mm outer comprising:		1	
22	930 101 131 61	bearing shell I		2	
23	930 101 132 61	bearing shell II-VII		12	

Pos	Part Number	Name	Remarks	Qty	Model
24	964 101 138 65	bearing sleeve VIII		1	
21	930 101 901 71	set of crankshaft bearings oversize 0,25 mm inner oversize 0,25 mm outer comprising:		1	
22	930 101 131 71	bearing shell I		2	
23	930 101 132 71	bearing shell II-VII		12	
24	964 101 138 66	bearing sleeve VIII		1	
21	930 101 901 76	set of crankshaft bearings oversize 0,50 mm inner oversize 0,25 mm outer comprising:		1	
22	930 101 131 76	bearing shell I		2	
23	930 101 132 76	bearing shell II-VII		12	
24	964 101 138 67	bearing sleeve VIII		1	
21	930 101 901 86	set of crankshaft bearings oversize 0,75 MM inner oversize 0,25 mm outer comprising:		1	
22	930 101 131 86	bearing shell I		2	
23	930 101 132 86	bearing shell II-VII		12	
24	930 101 138 88	bearing sleeve VIII		1	
21	930 101 901 90	set of crankshaft bearings oversize 1,00 MM inner oversize 0,25 mm outer comprising:		1	
22	930 101 131 90	bearing shell I		2	
23	930 101 132 90	bearing shell II-VII		12	
24	930 101 138 89	bearing sleeve VIII		1	
25	900 012 061 00	straight pin 5 H 8 X 10		1	
26	* 999 707 285 40	o-ring 51 X 4,5		1	
27	999 113 290 41	sealing ring 30 X 50 X 10	-80	1	
27	A 999 113 290 40	radial sealing ring 30 X 50 X 10		1	
		- -- E N D -- -			

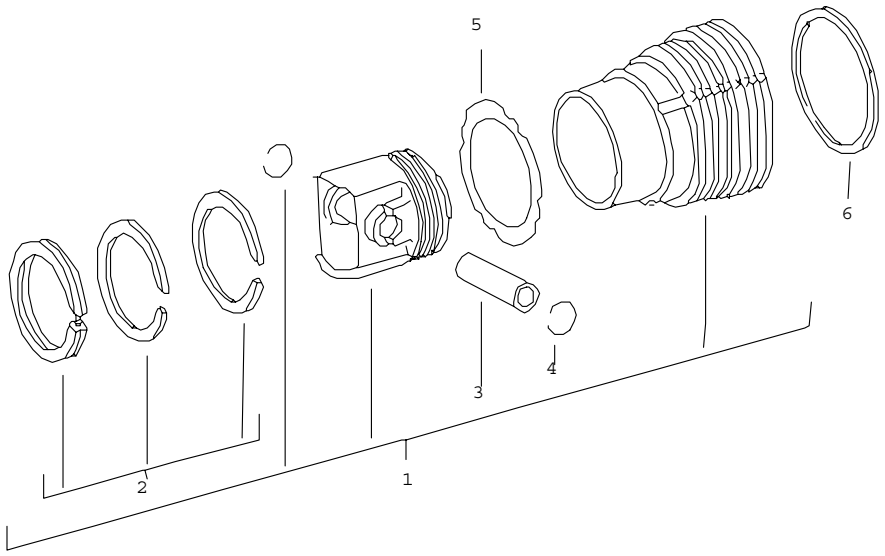

Pos	Part Number	Name	Remarks	Qty	Model
		cylinder with pistons see technical information GR.1 NR. 30			
		- mahle - group 5			
1	A 930 103 977 03	cylinder with pistons without mark	80-	6	SC
1	930 103 962 03	cylinder with pistons number plate -- / - 660-668 G	-79	6	SC
1	930 103 977 03	cylinder with pistons number plate -- / - 636-644 G	80-	6	SC
1	930 103 962 04	cylinder with pistons number plate + / ++ 668-676 G	-79	6	SC
1	930 103 977 04	cylinder with pistons number plate + / ++ 644-652 G	80-	6	SC
1	930 103 969 03	cylinder with pistons number plate -- / - 616-624 G		6	TURBO
1	930 103 969 04	cylinder with pistons number plate + / ++ 624-632 G		6	TURBO
		- mahle - group 6			
1	930 103 962 05	cylinder with pistons number plate -- / - 660-668 G	-79	6	SC
1	930 103 977 05	cylinder with pistons number plate -- / - 636-644 G	80-	6	SC
1	930 103 962 06	cylinder with pistons number plate + / ++ 668-676 G	-79	6	SC

Pos	Part Number	Name	Remarks	Qty	Model
1	930 103 977 06	cylinder with pistons number plate + / ++ 644-652 G	80-	6	SC
1	930 103 969 05	cylinder with pistons number plate -- / - 616-624 G		6	TURBO
1	930 103 969 06	cylinder with pistons number plate + / ++ 624-632 G - SCHMIDT - group 5		6	TURBO
1	A 930 103 966 04	cylinder with pistons without mark	-79	6	SC
1	930 103 966 03	cylinder with pistons number plate -- / - 695-703 G	-79	6	SC
1	930 103 984 03	cylinder with pistons number plate -- / - 673-681 G	80-	6	SC
1	930 103 966 04	cylinder with pistons number plate + / ++ 703-711 G	-79	6	SC
1	930 103 984 04	cylinder with pistons number plate + / ++ 681-689 G - SCHMIDT - group 6	80-	6	SC
1	930 103 966 02	cylinder with pistons without mark	-79	6	SC
1	930 103 966 05	cylinder with pistons number plate -- / - 695-703 G	-79	6	SC
1	930 103 984 05	cylinder with pistons number plate -- / - 673-681 G	80-	6	SC

Pos	Part Number	Name	Remarks	Qty	Model
1	930 103 966 06	cylinder with pistons number plate + / ++ 703-711 G	-79	6	SC
1	930 103 984 06	cylinder with pistons number plate + / ++ 681-689 G	80-	6	SC
		piston rings (MAHLE) set for 1 piston			
2	* 930 103 963 00	set of piston rings	-79	6	SC
2	* 930 103 986 00	set of piston rings	80-	6	SC
2	* 930 103 968 00	set of piston rings piston rings (SCHMIDT) set for 1 piston		6	TURBO
2	* 930 103 967 00	set of piston rings	-79	6	SC
2	930 103 985 00	set of piston rings	80-	6	SC
3	930 103 375 00	piston pin (MAHLE)	-79	6	
3	930 103 403 01	piston pin (SCHMIDT)	-79	6	
3	930 103 388 00	piston pin (MAHLE)	-79	6	TURBO
4	N 012 278 1	snap ring C 22		12	SC
4	900 908 019 00	ring C 23		12	TURBO
5	* 930 104 194 02	gasket 0,25 MM		6	
5	930 104 194 01	cylinder base gasket oversize 0,50 mm		6	M 930.10
6	* 930 104 317 00	ce-seal ring		6	SC
		- -- E N D -- -			

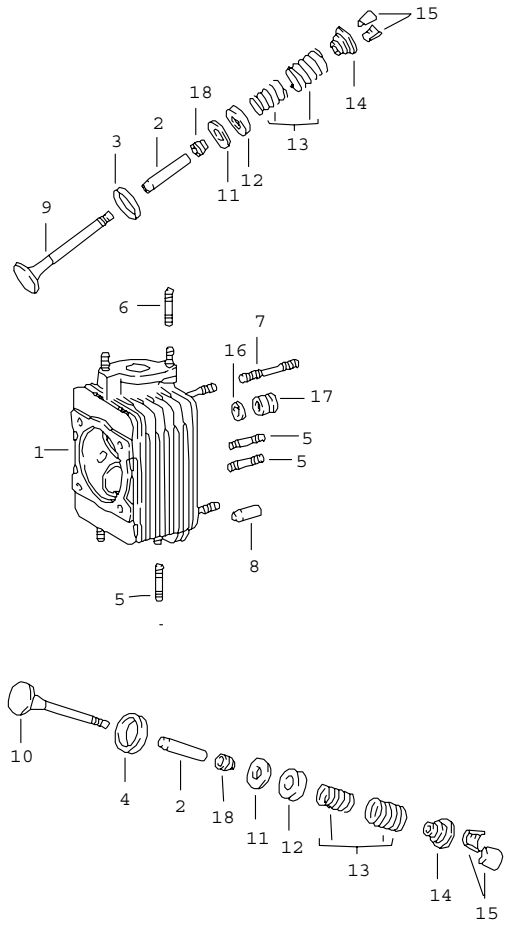

Pos	Part Number	Name	Remarks	Qty	Model
		cylinder head			
1	930 104 029 08	cylinder head without valves	79	6	SC
1	930 104 028 03	cylinder head without valves	80	6	SC
1	930 104 028 05	cylinder head without valves	81-	6	SC
1	930 104 043 09	cylinder head without valves		6	TURBO
(1)	A 930 104 019 05	cylinder head with valves ready for installation	78	6	SC
(1)	> 930 104 029 08	cylinder head with valves ready for installation	79	6	SC
(1)	930 104 018 03	cylinder head with valves ready for installation	80	6	SC
(1)	930 104 028 05	cylinder head with valves ready for installation	81-	6	SC
(1)	> 930 104 043 09	cylinder head with valves ready for installation		6	TURBO
2	930 104 321 50	valve guide 1st oversize		12	
3	930 104 331 50	valve seat ring for intake oversize		6	
4	A 930 104 335 56	valve seat ring for exhaust oversize 46 $		6	
4	930 104 335 56	valve seat ring for exhaust oversize 46 $		6	
5	999 062 006 02	stud BM 8 X 20		12	

Pos	Part Number	Name	Remarks	Qty	Model
5	999 062 239 02	stud BM 8 X 30	80-	12	SC
5	999 062 237 02	stud BM 8 X 35	-79	12	SC
5	999 062 237 02	stud BM 8 X 35		12	TURBO
6	999 062 009 02	stud BM 8 X 28	-79	12	SC
6	999 062 008 02	stud BM 8 X 25	80-	12	SC
6	999 062 178 02	stud BM 8 X 120		12	TURBO
7	999 062 041 02	stud BM 8 X 50		24	
8	999 012 006 00	straight pin		12	
9	A 930 105 409 13	intake valve		6	SC
9	930 105 409 13	intake valve		6	SC
9	964 105 409 06	intake valve		6	TURBO
10	A 930 105 419 08	exhaust valve		6	SC
10	930 105 419 51	exhaust valve		6	SC
10	930 105 419 50	exhaust valve		6	TURBO
11	A 930 105 461 00	washer		X	
11	930 105 461 00	washer		X	
12	901 105 463 00	ring		12	
13	901 105 901 50	set of valve springs		12	
14	901 105 421 03	concave washer		12	
15	901 105 417 00	collet		24	
16	999 031 091 01	washer		24	
17	A 901 104 382 02	cylinder head nut		24	
17	901 104 382 02	cylinder head nut		24	
18	928 104 193 12	valve stem seal		12	
-	000 043 204 48	sleeve		X	
		- -- E N D -- -			

Pos	Part Number	Name	Remarks	Qty	Model

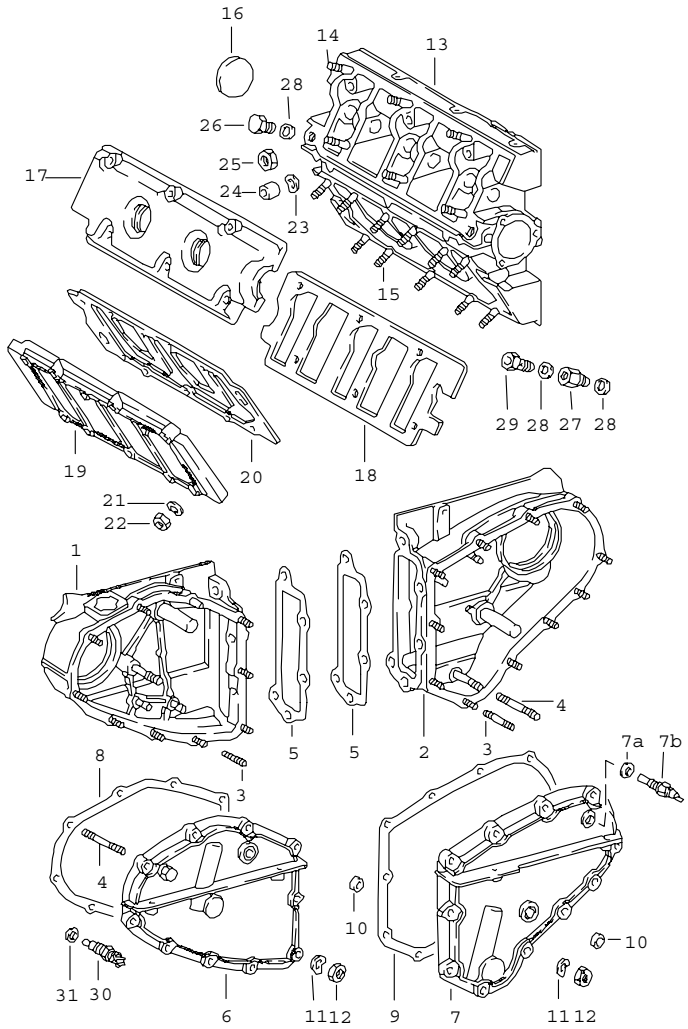

Pos	Part Number	Name	Remarks	Qty	Model
		camshaft housing chain case			
1	930 105 061 02	chain case	/L	1	
2	930 105 062 01	chain case	/R	1	
3	999 062 102 02	stud BM 6 X 22		19	
-	999 062 046 02	stud BM 8 X 65	-79	2	SC
-	999 062 052 02	stud BM 8 X 42		2	TURBO
-	999 062 052 02	stud BM 8 X 42	80-	2	SC
4 A	999 062 255 02	stud BM 8 X 60	/L	1	
4	999 062 255 02	stud BM 8 X 60	/L	1	
4	999 062 041 02	stud BM 8 X 50	/R	1	
5 *	930 105 193 00	gasket		2	
6	930 105 063 01	cover M >> 63D 4069 M >> 64D 3716 M >> 63D 8154 M >> 67D 0711	/L	1	
6	930 105 063 08	cover M 63D 4070 >> M 64D 3717 >> M 63D 8155 >> M 67D 0712 >>	/L	1	
-	999 062 010 02	stud BM 8 X 35		1	SC
7	930 105 064 10	cover use also: M >> 63D 4069 M >> 64D 3716 M >> 63D 8154 M >> 67D 0711	/R	1	
-	900 123 007 30	sealing ring		1	
-	N 016 155 3	screw plug		1	

Pos	Part Number	Name	Remarks	Qty	Model
7	A 930 105 064 01	cover M >> 63D 4069 M >> 64D 3716 M >> 63D 8154 M >> 67D 0711	/R	1	TURBO
7	930 105 064 10	cover use also: M >> 63D 4069 M >> 64D 3716 M >> 63D 8154 M >> 67D 0711	/R	1	TURBO
-	900 123 007 30	sealing ring		1	
-	N 016 155 3	screw plug		1	
7	A 930 105 064 10	cover M 63D 4070 >> M 64D 3717 >> M 63D 8155 >> M 67D 0712 >>	/R	1	TURBO
7	930 105 064 10	cover M 63D 4070 >> M 64D 3717 >> M 63D 8155 >> M 67D 0712 >>	/R	1	TURBO
7	930 105 064 02	cover M >> 63D 4069 M >> 64D 3716 M >> 63D 8154 M >> 67D 0711	/R 80-	1	SC
7	A 930 105 064 10	cover M 63D 4070 >> M 64D 3717 >> M 63D 8155 >> M 67D 0712 >>	/R	1	SC
7	930 105 064 10	cover M 63D 4070 >> M 64D 3717 >> M 63D 8155 >> M 67D 0712 >>	/R 80-	1	SC
7A	900 123 007 30	sealing ring A 14 X 18	80-	1	SC
7B	930 606 117 00	temperature switch	80-	1	SC
8	* 930 105 191 03	gasket	/L	1	
9	* 930 105 192 01	gasket	/R	1	
10	900 036 008 02	cover 15		2	

Pos	Part Number	Name	Remarks	Qty	Model
11	* 900 031 011 30	washer 6,4		19	
-	N 012 241 8	spring washer B 8		3	SC
-	900 031 014 30	washer 8,4		2	TURBO
12	900 910 012 02	lock nut M 6		19	
-	900 076 025 02	hexagon nut M 8		3	
13	930 105 021 00	camshaft housing		2	
14	999 062 009 02	stud BM 8 X 28		12	
15	999 062 010 02	stud BM 8 X 35		22	
-	930 105 362 00	oil splash tube		2	
-	901 105 379 00	plug		4	
16	930 105 161 00	cover		2	
17	901 105 115 03	cover		2	
18	* 930 105 194 00	gasket		2	
19	930 105 116 00	cover		2	
20	A 930 105 195 01	gasket		2	
20	930 105 195 02	gasket		2	
21	* 900 031 014 30	washer 8,4		40	
22	900 084 004 02	hexagon nut M 8		40	
23	N 012 241 8	spring washer B 8 X 15		40	
24	901 111 271 00	nut		6	
25	900 076 025 02	hexagon nut M 8		34	
26	901 105 374 00	screw plug		2	
27	901 105 361 01	intermediate piece		2	

Pos	Part Number	Name	Remarks	Qty	Model	Pos	Part Number	Name	Remarks	Qty	Model
28	* 900 123 005 00	sealing ring A 12 X 16		8							
29	999 134 018 02	banjo bolt A 6		2							
30	911 617 117 00	temperature switch		1							
31	* 900 123 007 70	sealing ring A 14 X 18		1							
		- -- E N D -- -									

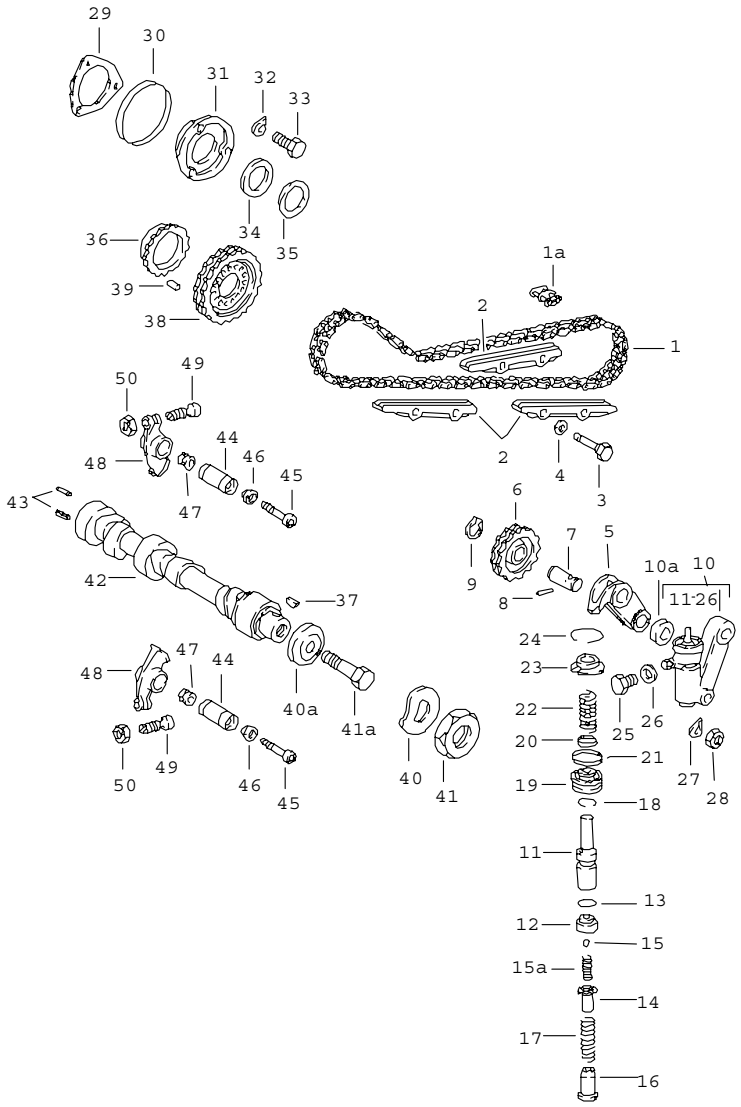

Pos	Part Number	Name	Remarks	Qty	Model
		valve control left			
1	A 901 105 529 00	timing chain		1	
1	993 105 529 00	timing chain		1	
1	A 911 105 529 50	timing chain with connecting link		1	
1	911 105 529 50	timing chain with connecting link		1	
1A	901 105 530 00	connecting link		1	
2	911 105 222 06	guide piece		3	
3	901 105 226 03	bolt		4	
4	* 900 123 066 30	sealing ring A 10 X 16		4	
5	901 105 505 02	chain wheel support M >> 640 0450 M >> 630 8135 M >> 630 1091 M >> 630 9033 M >> 670 0106 M >> 689 1301 M >> 689 0684 M >> 670 8023	-79	1	
5	930 105 509 00	chain wheel support M 640 0451 >> M 630 8136 >> M 630 1092 >> M 630 9034 >> M 670 0107 >> M 689 1302 >> M 689 0685 >> M 670 8024 >>	80-	1	
6	901 105 055 00	sprocket		1	
7	901 105 056 01	bolt		1	
8	900 197 010 00	tensioning sleeve 3 X 22		1	
9	N 012 415 1	circlip 15 X 1		1	

Pos	Part Number	Name	Remarks	Qty	Model
10	A 930 105 049 00	chain adjuster M >> 640 0450 M >> 630 8135 M >> 630 1091 M >> 630 9033 M >> 670 0106 M >> 689 1301 M >> 689 0684 M >> 670 8023		1	
10	930 105 053 00	chain adjuster M >> 63D 4069 M >> 64D 3716 M >> 63D 8154 M >> 67D 0711		1	
(10)	930 105 058 03	chain adjuster M 63D 4070 >> M 64D 3717 >> M 63D 8155 >> M 67D 0712 >>		1	
-	* 930 105 911 00	chain adjuster 1 set for subsequent installat.	-83	1	
10A	930 105 513 00	spacer sleeve see technical information GRUPPE 1 NR.29A		1	
11	930 105 559 00	piston		1	
12	* -	intermediate piece		1	
13	* -	o-ring OR 10-1		1	
14	* -	guide		1	
15	* -	ball		1	
15/A	* -	compression spring		1	
16	* -	spring guide		1	
17	916 105 534 00	compression spring		1	
18	* -	snap ring 16		1	
19	930 105 557 00	piston		1	
20	* -	o-ring CR 8,3 - 2,4		1	
21	* -	o-ring CR 20,3 - 2,4		1	
22	* 930 105 535 01	compression spring		1	
23	930 105 568 00	concave washer		1	
24	* -	snap ring 28		1	
25	930 105 573 00	bleeder screw		1	
26	* -	sealing ring 6 X 10		1	
27	N 012 241 8	spring washer B 8 X 15		1	
28	900 076 025 02	hexagon nut M 8		1	
29	* 930 105 197 05	gasket		1	SC
29	* 930 105 197 03	gasket		1	TURBO
30	* 999 701 468 40	round seal 67,5 X 75,4 X 4		1	
31	930 105 196 00	cover		1	
32	N 012 226 5	spring washer B 6		3	
33	900 075 341 02	screw M 6 X 25		3	
34	901 105 562 00	thrust washer		1	
35	901 105 561 00	shim		X	
36	901 105 583 01	flange		1	
37	N 012 708 2	woodruff key 4 X 5		1	
38	901 105 546 02	sprocket II		1	
39	900 243 001 00	straight pin 6 H 8 X 14		1	
40	900 028 021 01	spring washer	-81	1	
40	900 028 021 02	spring washer B 30	-81	1	
40A	993 105 163 50	washer	82-	1	
41	901 105 172 00	nut	-81	1	

Pos	Part Number	Name	Remarks	Qty	Model
41A	900 082 072 01	hexagon-head bolt M 12 X 1,5 X 50	82-	1	
42	A 930 105 147 08	camshaft	-81	1	SC
42	930 105 147 10	camshaft		1	SC
42	A 930 105 143 00	camshaft	-81	1	TURBO
42	A 930 105 143 03	camshaft		1	TURBO
42	930 105 143 03	camshaft		1	TURBO
43	A 900 095 017 01	roll pin	SPM	2	SC
43	900 095 017 01	roll pin 5 X 24	SPM	2	SC
44	901 105 342 04	rocker shaft		12	
45	999 067 008 00	pan-head screw		12	
46	901 105 344 02	bush		12	
47	901 105 376 02	nut		12	
48	A 930 105 043 00	rocker arm	-82	12	
48	930 105 043 00	rocker arm		12	
49	901 105 370 02	adjusting screw		12	
50	999 034 005 00	hexagon nut		12	
		- -- E N D -- -			

Pos	Part Number	Name	Remarks	Qty	Model

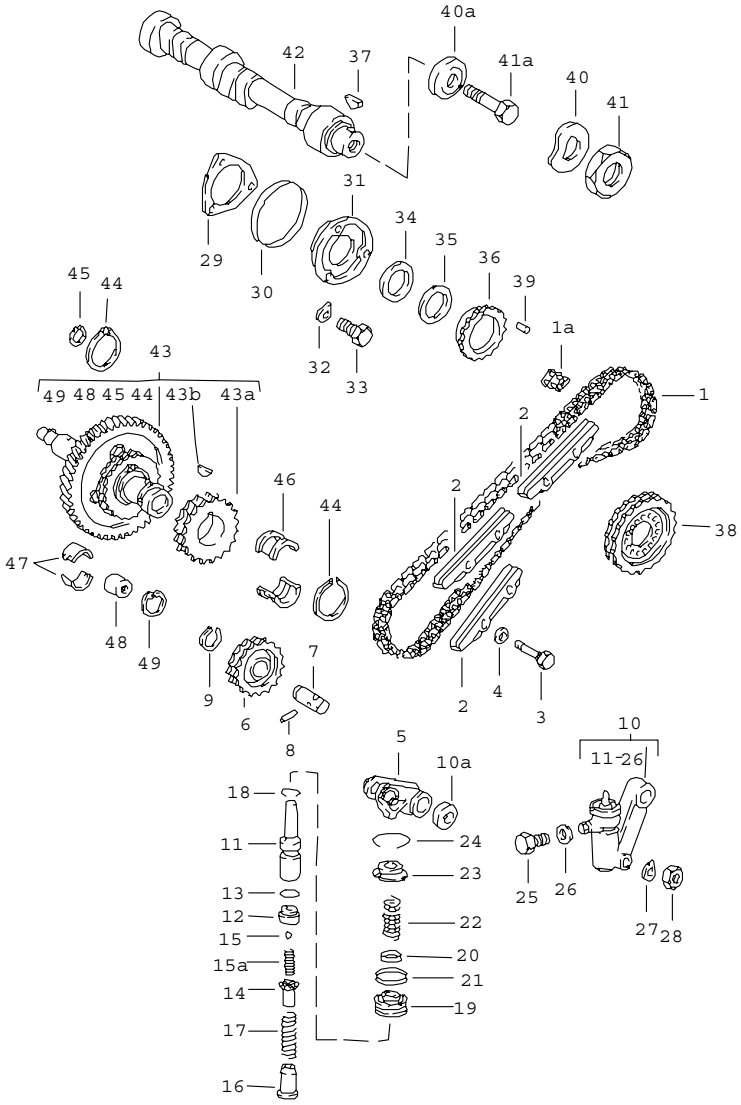

Pos	Part Number	Name	Remarks	Qty	Model
		valve control right			
1	A 901 105 529 00	timing chain		1	
1	993 105 529 00	timing chain		1	
1	A 911 105 529 50	timing chain with connecting link		1	
1	911 105 529 50	timing chain with connecting link		1	
1A	901 105 530 00	connecting link		1	
2	911 105 222 05	guide piece		1	
2	911 105 222 06	guide piece		2	
3	901 105 226 03	bolt		4	
4	* 900 123 066 30	sealing ring A 10 X 16		4	
5	901 105 506 02	chain wheel support M >> 640 0450 M >> 630 8135 M >> 630 1091 M >> 630 9033 M >> 670 0106 M >> 689 1301 M >> 689 0684 M >> 670 8023	-79	1	
5	930 105 510 00	chain wheel support M 640 0451 >> M 630 8136 >> M 630 1092 >> M 630 9034 >> M 670 0107 >> M 689 1302 >> M 689 0685 >> M 670 8024 >>	80-	1	
6	901 105 055 00	sprocket		1	
7	901 105 056 01	bolt		1	
8	900 197 010 00	tensioning sleeve 3 X 22		1	
9	N 012 415 1	circlip 15 X 1		1	

Pos	Part Number	Name	Remarks	Qty	Model
10	A 930 105 049 00	chain adjuster M >> 640 0450 M >> 630 8135 M >> 630 1091 M >> 630 9033 M >> 670 0106 M >> 689 1301 M >> 689 0684 M >> 670 8023		1	
10	930 105 053 00	chain adjuster M >> 63D 4069 M >> 64D 3716 M >> 63D 8154 M >> 67D 0711		1	
(10)	930 105 058 03	chain adjuster M 63D 4070 >> M 64D 3717 >> M 63D 8155 >> M 67D 0712 >>		1	
-	* 930 105 912 01	chain adjuster 1 set for subsequent installat.	-83	1	930.07/08 16/17
10A	930 105 513 00	spacer sleeve see technical information GRUPPE 1 NR. 29A		1	
11	930 105 559 00	piston		1	
12	* -	intermediate piece		1	
13	* -	o-ring OR 10 - 1		1	
14	* -	guide		1	
15	* -	ball		1	
15/A	* -	compression spring		1	
16	* -	spring guide		1	
17	916 105 534 00	compression spring		1	
18	* -	snap ring 16		1	
19	930 105 557 00	piston		1	
20	* -	o-ring CR 8,3 - 2,4		1	
21	* -	o-ring CR 20,3 - 2,4		1	
22	930 105 535 01	compression spring		1	
23	930 105 568 00	concave washer		1	
24	* -	snap ring 28		1	
25	930 105 573 00	bleeder screw		1	
26	* -	sealing ring A 6,5 X 9,5		1	
27	N 012 241 8	spring washer B 8 X 15		1	
28	900 076 025 02	hexagon nut M 8		1	
29	* 930 105 197 05	gasket		1	SC
29	* 930 105 197 03	gasket		1	TURBO
30	* 999 701 468 40	round seal 67,5 X 75,4 X 4		1	
31	930 105 196 00	cover		1	
32	N 012 226 5	spring washer B 6		3	
33	900 075 341 02	screw M 6 X 25		3	
34	901 105 562 00	thrust washer		1	
35	901 105 561 00	shim		X	
36	901 105 583 01	flange		1	
37	N 012 708 2	woodruff key 4 X 5		1	
38	901 105 546 02	sprocket II		1	
39	900 243 001 00	straight pin 6 H 8 X 14		1	
40	900 028 021 02	spring washer B 30	-81	1	
40A	993 105 163 50	washer	82-	1	
41	901 105 172 00	nut	-81	1	
41A	900 082 072 01	hexagon-head bolt M 12 X 1,5 X 50	82-	1	

Pos	Part Number	Name	Remarks	Qty	Model
42	A 930 105 148 08	camshaft	-81	1	SC
42	930 105 148 10	camshaft		1	SC
42	A 930 105 142 00	camshaft	-81	1	TURBO
42	A 930 105 142 03	camshaft		1	TURBO
42	930 105 142 03	camshaft		1	TURBO
43	A 930 105 013 01	intermediate shaft size 0	-79	1	
43	930 105 013 01	intermediate shaft size 0		1	
43	A 930 105 013 11	intermediate shaft size 1	-79	1	
43	930 105 013 11	intermediate shaft size 1		1	
43A	901 105 125 04	sprocket		2	
43B	900 118 010 00	woodruff key		2	
44	900 041 025 01	circlip 36 X 1,75		2	
45	900 041 026 01	circlip 13 X 1		1	
46	916 101 137 00	thrust bearing		2	
47	901 101 135 00	bearing		2	
48	901 105 275 00	plug		1	
49	N 012 296 1	circlip 16 X 1		1	
		- -- E N D -- -			

Pos	Part Number	Name	Remarks	Qty	Model

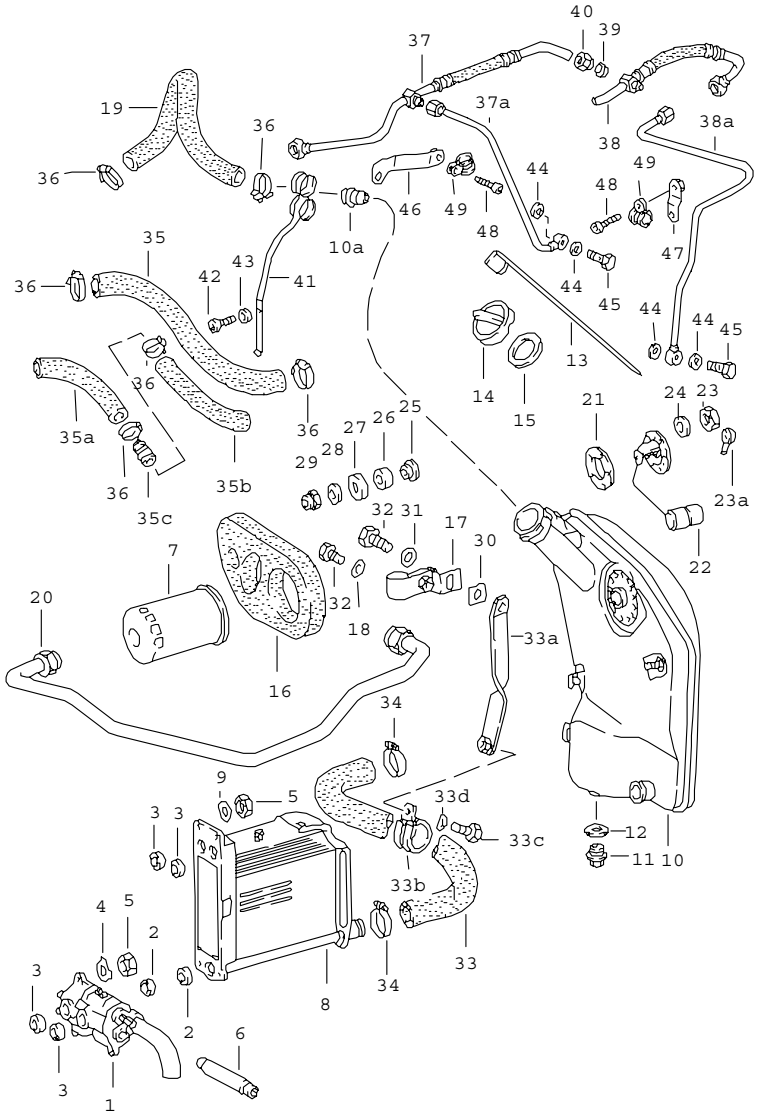

Pos	Part Number	Name	Remarks	Qty	Model
		engine lubrication			
		oil pump see technical information GR.1 NR.1/85			
1	A 911 107 008 01	oil pump M >> 63D 4069 M >> 64D 3716 M >> 63D 8154 M >> 67D 0711		1	SC
1	911 107 008 05	oil pump M 63D 4070 >> M 64D 3717 >> M 63D 8155 >> M 67D 0712 >>		1	SC
1	A 930 107 008 02	oil pump M >> 63D 4069 M >> 64D 3716 M >> 63D 8154 M >> 67D 0711		1	TURBO
1	996 107 008 70	oil pump M 63D 4070 >> M 64D 3717 >> M 63D 8155 >> M 67D 0712 >>		1	TURBO
2	* 999 704 173 50	sealing ring		2	
3	* 999 704 172 50	sealing ring		4	
4	999 039 001 00	tab washer		3	
5	900 076 025 02	hexagon nut M 8		7	
6	901 107 121 00	connecting shaft		1	SC
6	930 107 143 00	connecting shaft		1	TURBO
7	930 107 764 01	oil filter		1	
8	> 911 107 041 00	oil cooler		1	
9	N 012 241 8	spring washer B 8 X 15		4	
10	A 911 107 006 20	oil tank		1	SC
10	911 107 006 22	oil tank use also:		1	SC
-	999 512 198 02	hose clamp		1	
-	034 133 335 D	cap		1	

Pos	Part Number	Name	Remarks	Qty	Model
10	A 930 107 006 00	oil tank	SPM	1	SC
10	930 107 006 03	oil tank use also:	SPM	1	SC
-	944 107 091 01	oil filler cover		1	
-	930 107 601 02	adapter		1	
-	900 104 013 02	union nut		1	
10	A 930 107 006 00	oil tank		1	TURBO
10	930 107 006 03	oil tank use also:		1	
-	944 107 091 01	oil filler cover		1	
-	930 107 601 02	adapter		1	
-	900 104 013 02	union nut		1	
-	930 107 601 00	bush		1	TURBO(CDN) (AUS)
-	900 104 015 02	union nut B1 L10		1	TURBO(CDN) (AUS)
10A	930 107 289 00	restrictor	81-	1	
11	A 911 107 176 03	screw plug		1	
11	911 107 176 03	screw plug		1	
12	* 900 123 011 20	sealing ring A 22 X 27		1	
13	930 107 731 00	oil level dipstick	-80	1	
13	930 107 731 01	oil level dipstick	81-	1	
14	911 107 072 02	fuel tank cap		1	
15	930 107 272 01	sealing ring		1	
16	A 911 107 192 03	gasket		1	
16	911 107 192 03	gasket		1	
17	901 501 930 22	support		1	
18	A 900 028 003 01	spring washer		1	
18	N 012 226 5	spring washer A 6		1	

Pos	Part Number	Name	Remarks	Qty	Model
19	930 107 399 00	connecting hose oil tank air cleaner		1	SC
19	930 107 395 01	connecting hose oil tank air cleaner		1	TURBO
20	A 930 107 741 11	oil pipe		1	SC
20	911 107 744 10	oil pipe		1	TURBO
21	914 201 891 00	gasket		1	
22	A 911 641 541 01	tank gauge	-80	1	
22	911 641 541 02	tank gauge		1	
23	A 900 076 027 02	hexagon nut		5	
23	N 011 005 14	hexagon nut M 5		5	
23A	999 659 011 50	protection cap		1	
24	900 025 003 30	washer 5,3		5	
25	901 107 692 00	washer		2	
26	901 107 693 01	washer		2	
27	901 107 661 00	washer		2	
28	900 151 008 02	washer B 8,4		2	
29	A 999 090 004 02	hexagon nut		2	
29	999 090 004 02	hexagon nut M 8		2	
30	901 501 909 20	intermediate layer		1	
31	A N 011 524 7	washer		1	
31	N 011 524 7	washer 6,4		1	
32	900 075 057 02	hexagon-head bolt M 6 X 16		2	
33	911 107 233 00	suction hose		1	SC
33	A 930 107 233 02	suction hose		1	TURBO
33	930 107 233 02	suction hose		1	TURBO

Pos	Part Number	Name	Remarks	Qty	Model
33A	930 107 409 00	support		1	TURBO
33BA	930 107 407 03	clip		1	SC
33B	930 107 407 03	clip		1	SC
33B	999 511 123 02	clip		1	TURBO
33CA	900 075 057 02	hexagon-head bolt		1	TURBO
33C	900 075 057 02	hexagon-head bolt M 6 X 16		1	TURBO
33DA	N 012 226 5	spring washer		1	TURBO
33D	N 012 226 5	spring washer B 6		1	TURBO
34	999 512 091 00	hose clamp		2	
35	901 107 394 00	connecting hose engine oil tank	-79	1	SC
(35)	930 107 397 01	line for bleeding crankcase		1	TURBO
(35)	930 107 393 00	connecting hose engine oil tank		1	TURBO
35A	930 107 394 10	connecting hose engine oil tank	80-	1	SC
35B	930 107 394 09	connecting hose engine oil tank	80-	1	SC
35C	930 110 267 04	connecting piece	80-	1	SC
36	999 512 356 02	hose clamp 25-40/9		7	
36A	N 024 511 2	hose clamp		2	TURBO
36	999 512 252 02	hose clamp		2	TURBO
(37)	901 107 347 01	oil hose M >> 63D 4069 M >> 64D 3716 M >> 63D 8154 M >> 67D 0711	/L	1	
37	930 107 347 03	oil hose M 63D 4070 >> M 64D 3717 >> M 63D 8155 >> M 67D 0712 >>		1	
37A	930 107 347 02	oil pipe M 63D 4070 >> M 64D 3717 >> M 63D 8155 >> M 67D 0712 >>		1	
(38)	901 107 348 00	breather hose M >> 63D 4069 M >> 64D 3716 M >> 63D 8154 M >> 67D 0711	/R	1	
38	930 107 348 11	oil hose M 63D 4070 >> M 64D 3717 >> M 63D 8155 >> M 67D 0712 >>		1	
38AA	930 107 348 08	oil pipe M 63D 4070 >> M 64D 3717 >> M 63D 8155 >> M 67D 0712 >>		1	
38A	930 107 348 09	oil pipe M 63D 4070 >> M 64D 3717 >> M 63D 8155 >> M 67D 0712 >>		1	(QI-1/87)
39A	N 020 825 1	cutting ring		2	
39	N 020 825 1	cutting ring LL 8		2	
40	900 104 003 02	union nut ALL 8		2	
41	930 207 356 00	retaining bracket	80-	1	SC
42	N 010 215 13	hexagon-head bolt M 6 X 15	80-	1	SC
43	N 011 524 7	washer 6,4	80-	1	SC
44	900 123 115 30	sealing ring A 8 X 11,5 M 63D 4070 >> M 64D 3717 >> M 63D 8155 >> M 67D 0712 >>		4	

Pos	Part Number	Name	Remarks	Qty	Model
45	N 021 073 1	banjo bolt LL 3-5 M 63D 4070 >> M 64D 3717 >> M 63D 8155 >> M 67D 0712 >>		2	
46	930 107 341 00	support	/L	1	
47	930 107 342 01	support	/R	1	
48	900 119 059 02	pan-head screw M 4 X 10		2	
49	999 511 174 02	clip 4/9		2	
		- -- E N D -- -			

Pos	Part Number	Name	Remarks	Qty	Model

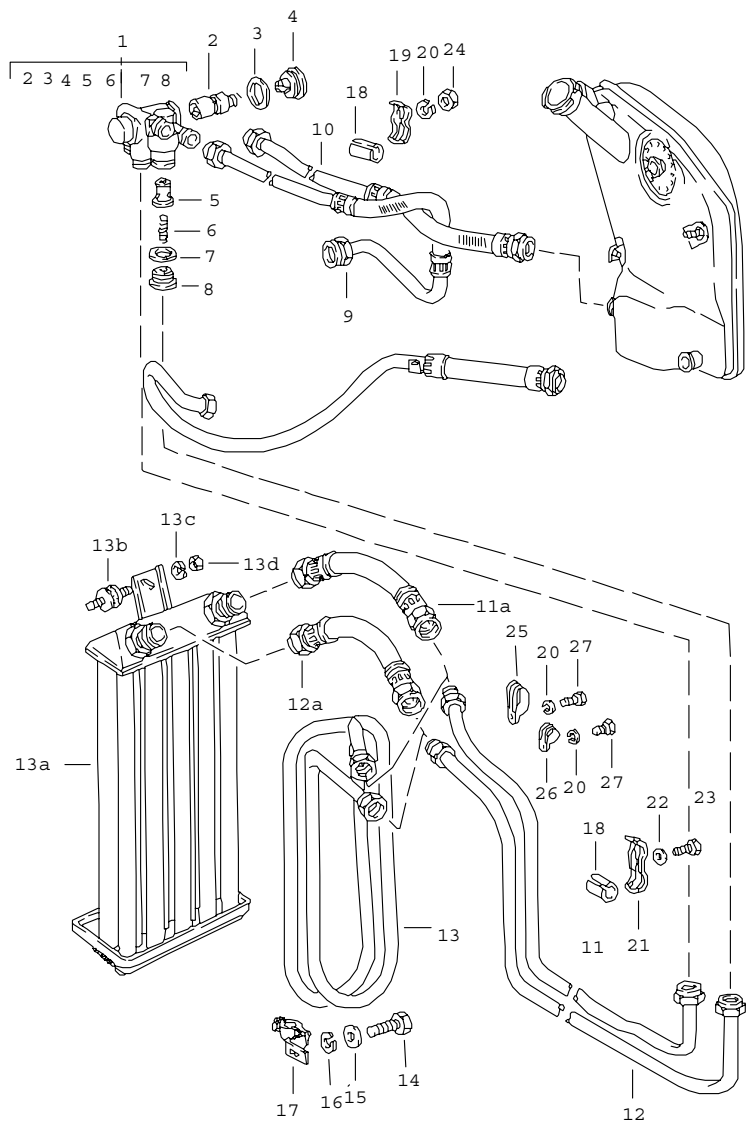

Pos	Part Number	Name	Remarks	Qty	Model
		engine lubrication radiator coil			
1	930 107 017 00	regulator housing		1	
2	930 107 155 00	regulator insert		1	
3	900 123 136 30	sealing ring A 42 X 49		1	
4	911 107 155 00	screw plug		1	
5	930 107 076 00	piston		1	
6	900 280 008 00	compression spring		1	
7	900 123 075 30	sealing ring A 32 X 38		1	
8	916 107 276 00	screw plug		1	
9	911 107 743 10	oil pipe		1	SC
9	930 107 729 10	oil pipe		1	TURBO
10	A 911 107 730 11	oil pipe		1	
10	911 107 730 11	oil pipe		1	
11	930 207 046 01	return pipe		1	
12	930 207 045 01	intake tube	-80	1	
12	930 207 045 01	intake tube	81-	1	
13	911 207 050 01	radiator coil		1	
14	900 075 085 02	hexagon-head bolt M 8 X 20		1	
15	900 025 007 02	washer 8,4		1	
16	900 027 015 02	lock ring B 8		1	
17	911 207 051 00	clip		1	
18	964 207 302 00	hose piece		2	
19	911 207 237 00	support		1	
20	N 012 006 4	lock ring B 6		4	
21	911 207 303 00	support		3	

Pos	Part Number	Name	Remarks	Qty	Model
22	900 151 007 02	washer B 7,4		3	
23	900 187 032 02	tapping screw BZ 6,3 X 32		3	SC
23	900 187 028 02	tapping screw BZ 6,3 X 25		3	TURBO
24	900 076 010 02	hexagon nut M 6		1	
25	999 511 084 02	clip 1100 2 X 22/15		1	
26	999 511 080 02	clip 1100 22/15		1	
27	N 010 217 9	hexagon-head bolt M 6 X 20		3	
		- -- E N D -- -			

Pos	Part Number	Name	Remarks	Qty	Model

Model	Year	MG	SG	Illustration	Restrictions	Update	10:51	18.08.2006	PORSCHE PET PORSCHE
911	83	1	04	104-10		203			

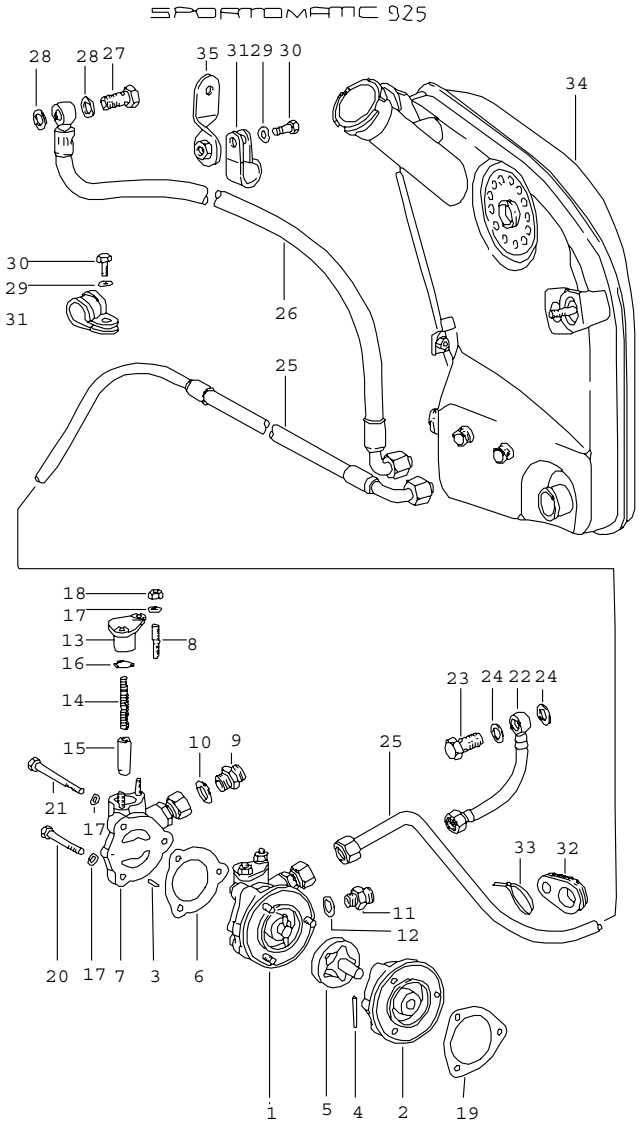

Pos	Part Number	Name	Remarks	Qty	Model
		SPM- oil supply for converter			
1	905 107 006 04	oil pump		1	
2	905 107 101 03	rotor housing		1	
3	900 197 017 00	tensioning sleeve 4 X 14		1	
4	900 302 001 00	straight pin 4M 6 X 32		1	
5	905 107 901 01	rotor set		1	
6	* 905 107 191 02	gasket		1	
7	905 107 015 04	cover		1	
8	999 062 002 02	stud BM 6 X 15		2	
9	999 099 011 02	union AM-10-11 ST.		1	
10	* 900 123 008 30	sealing ring A 14 X 20		1	
11	999 136 007 02	union		1	
12	* 900 123 116 30	sealing ring A 12 X 15,5		1	
13	905 107 141 03	flat connector		1	
14	905 107 142 01	compression spring		1	
15	905 107 143 01	slide		1	
16	* 999 701 135 50	o-ring R 15 X 2,5		1	
17	N 012 226 5	spring washer B 6		5	
18	900 076 010 02	hexagon nut M 6		2	
19	* 930 105 197 05	gasket		1	
20	900 074 111 02	hexagon-head bolt M 6 X 50		2	
21	900 074 022 02	hexagon-head bolt M 6 X 65		1	

Pos	Part Number	Name	Remarks	Qty	Model
22	925 125 038 07	pressure pipe PUMPE - converter housing		1	
23	999 134 012 02	banjo bolt		1	
24	* 900 123 006 30	sealing ring A 12 X 18		2	
25	911 125 335 01	oil pipe order also:		1	
-	999 104 007 02	union nut		1	
-	999 103 001 02	collet		1	
26	925 301 117 11	return line		1	
27	900 123 101 30	sealing ring A 10		1	
28	900 123 019 30	sealing ring		2	
29	N 011 524 7	washer		2	
30	N 010 215 13	hexagon-head bolt M 6 X 15		2	
31	N 020 607 1	clamp		2	
32	905 107 173 00	spacer rubber		2	
33	999 513 002 40	tie-wrap		2	
34	A 930 107 006 00	oil tank		1	
34	930 107 006 03	oil tank use also:		1	
-	944 107 091 01	oil filler cover		1	
-	930 107 601 02	adapter		1	
-	900 104 013 02	union nut		1	
35	925 301 018 00	fastening clip		1	
		- -- E N D -- -			

Model	Year	MG	SG	Illustration	Restrictions	Update	10:51	18.08.2006	PORSCHE	PET	PORSCHE
911	83	1	05	105-00		203					

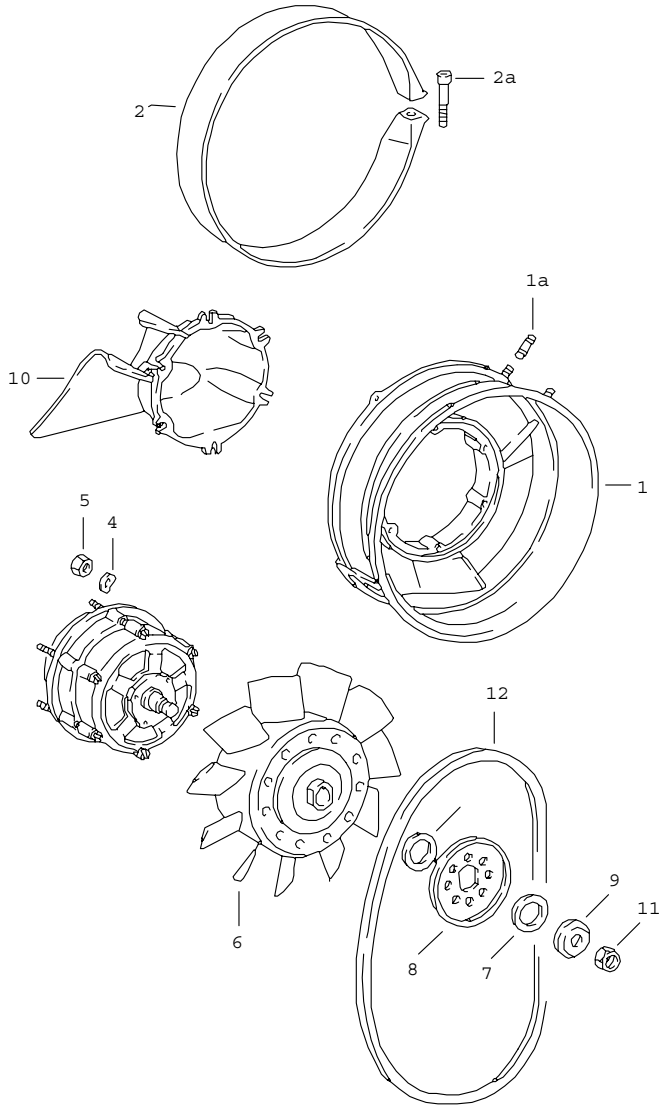

Pos	Part Number	Name	Remarks	Qty	Model
		air cooling			
1	930 106 005 00	fan housing	-79	1	SC
1	930 106 006 00	fan housing	80-	1	SC
1	930 106 006 00	fan housing		1	TURBO
1A	999 062 006 02	stud BM 8 X 20		2	
2	964 106 251 20	clip		1	
2A	A N 014 715 3	pan-head screw M 8 X 45		1	
2A	900 067 020 02	pan-head screw M 8 X 50		1	
4	N 012 226 5	spring washer B 6		6	
5	900 076 010 02	hexagon nut M 6		6	
6	930 106 011 01	impeller	-79	1	SC
6	930 106 012 00	impeller		1	SC
6	930 106 012 00	impeller		1	TURBO
6	930 106 012 00	impeller		1	TURBO
7	930 106 564 00	shim		X	
8	911 106 208 00	pulley	-79	1	SC
8	930 106 209 02	pulley half	80-	1	SC
8	930 106 209 02	pulley half		1	TURBO
9	901 603 428 00	tensioning cap	-81	1	
9	911 603 428 01	tensioning cap	82-	1	
10	A 911 106 033 03	hub extension		1	SC
10	A 930 106 033 00	hub extension		1	TURBO
10	A 911 106 033 04	hub extension		1	
10	911 106 033 05	hub extension		1	
11	901 603 905 00	hexagon nut M 16 X 1	-81	1	
11	928 603 904 00	set of fastening parts M 17 X 1,5	82-	1	

Pos	Part Number	Name	Remarks	Qty	Model
12	999 192 097 50	narrow v-belt 9,5 X 725	-79	1	SC
12	999 192 176 50	narrow v-belt 9,5 X 710	80-	1	SC
12	999 192 176 50	narrow v-belt 9,5 X 710		1	TURBO
		- -- E N D -- -			

Model	Year	MG	SG	Illustration	Restrictions	Update	10:52	18.08.2006	PORSCHE PET PORSCHE
911	83	1	05	105-05		203			

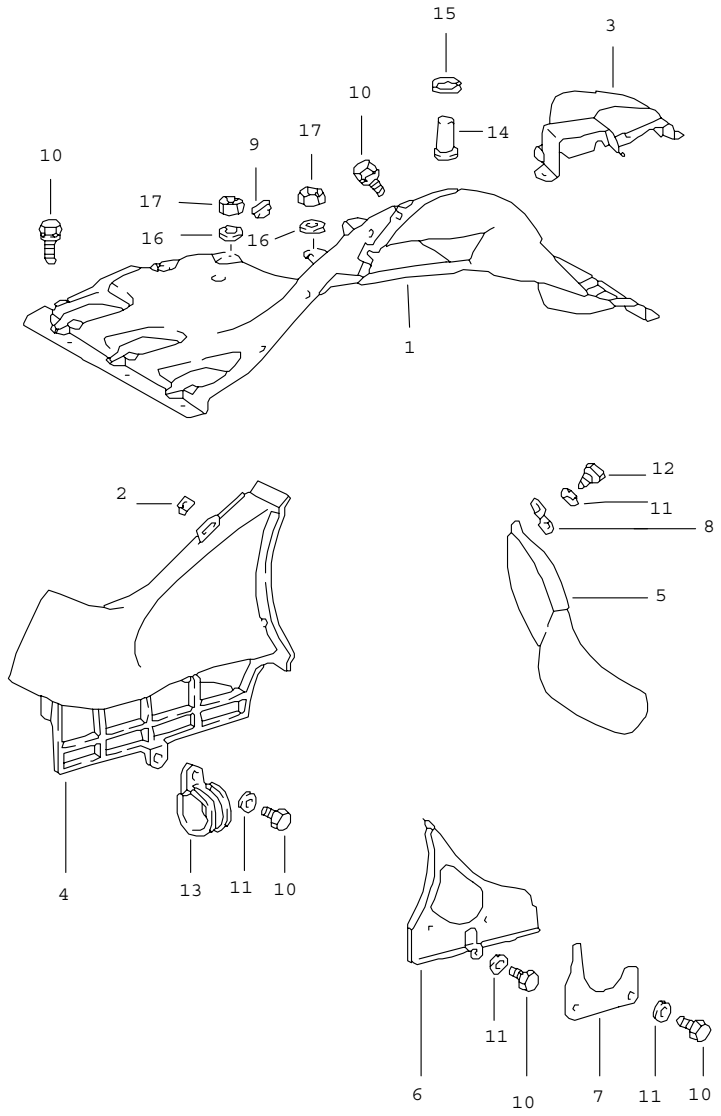

Pos	Part Number	Name	Remarks	Qty	Model
		air duct			
1	A 930 106 041 00	air duct red	-78	1	SC
1	PCG 106 041 04	air duct black		1	SC
1	A 930 106 041 12	air duct red	-78	1	TURBO
1	930 106 041 13	air duct red		1	TURBO
2	999 507 003 02	speed nut B 6,3		5	
3	911 106 406 00	air duct		1	
4	930 106 326 01	hot air socket		1	SC
(4)	930 106 321 01	hot air socket		1	TURBO
5	911 106 327 00	hot air socket		1	TURBO
6	911 106 036 01	cover plate		1	SC
(6)	911 106 036 00	cover plate		1	TURBO
7	911 106 827 00	closing plate		1	TURBO
8	911 106 331 00	support		1	TURBO
9	999 703 092 40	plug 9 X 18,5/14		1	
10	999 075 039 02	screw M 6 X 12		10	
10	999 143 004 08	locking screw M 6 X 12		8	
10	900 075 057 02	hexagon-head bolt M 6 X 16		2	
10	900 075 014 02	hexagon-head bolt M 6 X 18		2	
11	N 011 524 7	washer 6,4		8	
11	999 025 108 02	washer 6,4 X 14		15	
11	N 011 666 7	washer B 6,4		2	

Pos	Part Number	Name	Remarks	Qty	Model
11	999 025 070 02	washer 6,1		2	
12	900 187 015 02	tapping screw B 6,3 X 16		4	
12	900 187 027 02	hexagon-head tapping screw BZ 6,3 X 23		1	TURBO
13	999 511 069 02	clamp		1	SC
14	911 106 415 01	pipe		1	TURBO
15	999 591 369 02	locking washer		1	TURBO
16	N 011 524 7	washer A 6,4		2	
17	900 076 010 02	hexagon nut M 6		2	
		- -- E N D -- -			

Pos	Part Number	Name	Remarks	Qty	Model

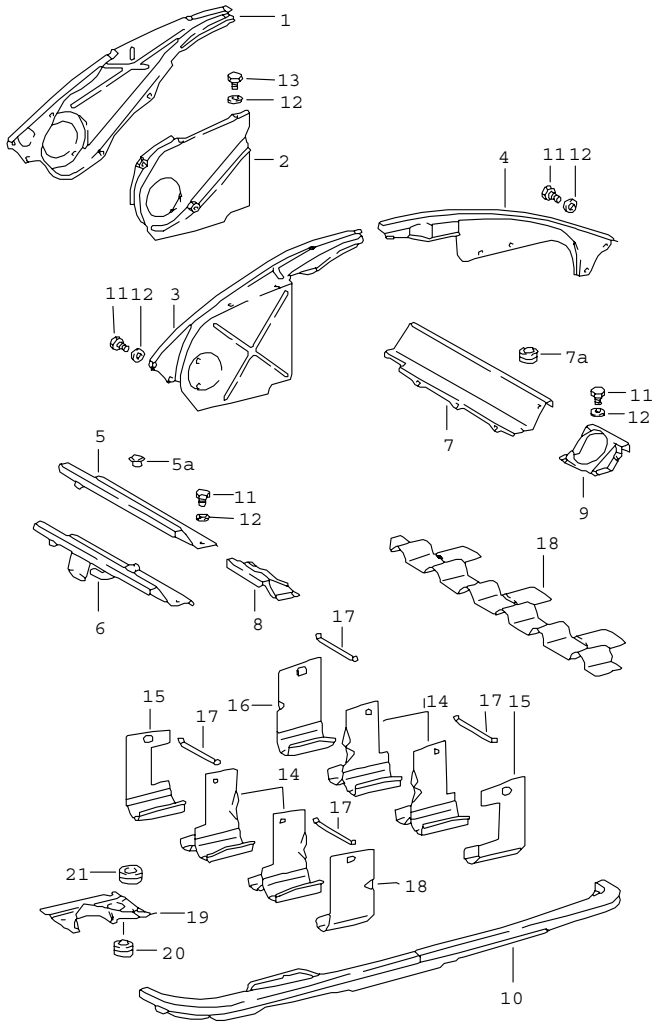

Pos	Part Number	Name	Remarks	Qty	Model
		air duct engine cover			
1	930 106 705 01	engine cover		1	TURBO
2	930 106 707 01	engine cover		1	TURBO
3	901 106 081 04	engine cover		1	SC
3	905 106 081 04	engine cover	SPM	1	SC
4	911 106 802 00	engine cover		1	SC
4	930 106 805 00	engine cover		1	TURBO
5	A 901 106 083 00	engine cover	-79	1	SC
5	911 106 083 01	engine cover use also: 999 703 224 40	-79	1	SC
5	911 106 083 01	engine cover	80-	1	SC
5A	999 703 224 40	cap $ 20,5		1	SC
6	930 106 703 01	engine cover		1	TURBO
7	901 106 084 00	engine cover	-79	1	SC
7	901 106 084 00	engine cover	80-	1	SC
7	930 106 084 00	engine cover	-79	1	SC(CALIF)(J)
7	930 106 084 00	engine cover		1	TURBO
8	911 106 853 00	cover not for M 027, M 193	-79	1	SC
8	930 106 853 00	cover		1	SC(CALIF)(J)
8	901 106 825 00	cover		1	TURBO
9	901 106 826 00	cover		1	SC
9	A 930 106 826 01	cover		1	TURBO
9	930 106 826 01	cover		1	TURBO
10	911 106 085 02	engine cover	80-	1	SC
10	911 106 085 03	engine cover	80-	1	SC M 559
10	930 106 085 02	engine cover	-79	1	SC
10	930 106 085 04	engine cover	-79	1	SC M 399

Pos	Part Number	Name	Remarks	Qty	Model	Pos	Part Number	Name	Remarks	Qty	Model
10	930 106 851 05	engine cover		1	TURBO						
10	930 106 851 06	engine cover		1	TURBO (J)						
10	930 106 851 07	engine cover		1	TURBO M 559						
10	930 106 851 08	engine cover		1	TURBO M 559 (J)						
11	999 075 039 02	screw M 6 X 12		39							
12	N 011 524 7	washer 6,4		41							
13	N 010 208 5	hexagon-head bolt M 6 X 8		2	TURBO						
14	930 106 023 00	baffle plate		4	SC						
14	930 106 023 01	baffle plate		4	TURBO						
15	930 106 221 00	baffle plate		2	SC						
15	930 106 221 01	baffle plate		2	TURBO						
16	930 106 222 00	baffle plate		2	SC						
16	930 106 222 01	baffle plate		2	TURBO						
17	930 106 228 00	leaf spring		6							
18	930 106 301 00	cover plate		2	SC						
19	930 106 852 01	cover		1	TURBO						
20	930 106 175 00	rubber sleeve 21,5 $		1	TURBO						
21	930 106 176 00	rubber sleeve 34 $		1	TURBO						
-	A N 010 210 13	hexagon-head bolt		1	TURBO (J)						
-	N 010 210 13	hexagon-head bolt M 6 X 10		1	TURBO (J)						
-	N 012 226 5	spring washer B 6		1	TURBO (J)						
		- -- E N D -- -									

Model	Year	MG	SG	Illustration	Restrictions	Update				
911	83	1	06	106-00		203	10:52	18.08.2006	PORSCHE	PET	PORSCHE

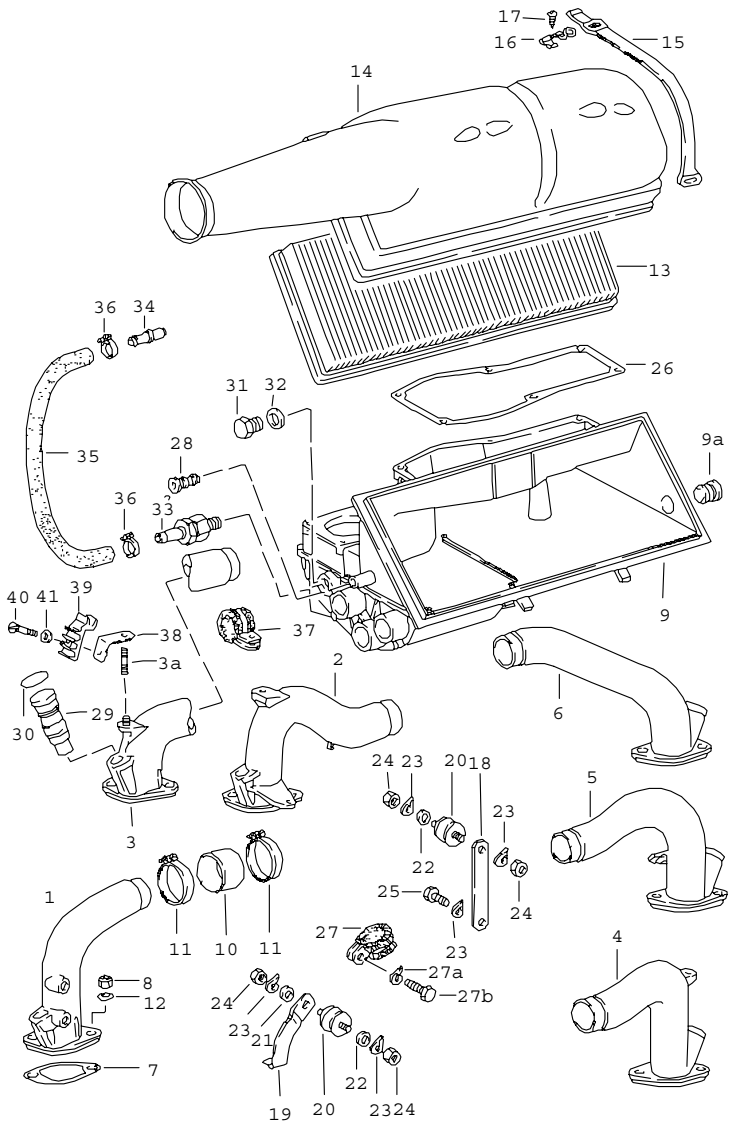

Pos	Part Number	Name	Remarks	Qty	Model
		air cleaner			911 SC
1	911 110 420 06	intake pipe cylinder 1	-79	1	
1	911 110 420 02	intake pipe cylinder 1	80-	1	
2	911 110 470 06	intake pipe cylinder 2	-79	1	
2	911 110 470 02	intake pipe cylinder 2	80-	1	
3	911 110 480 06	intake pipe cyl. 3	-79	1	
3	911 110 480 02	intake pipe cyl. 3	80-	1	
3A	999 062 006 02	stud BM 8 X 20		2	
4	911 110 440 06	intake pipe cyl. 4	-79	1	
4	911 110 440 02	intake pipe cyl. 4	80-	1	
5	911 110 450 06	intake pipe cylinder 5	-79	1	
5	911 110 450 02	intake pipe cylinder 5	80-	1	
6	911 110 490 06	intake pipe cyl. 6	-79	1	
6	911 110 420 06	intake pipe cyl. 6	-79	1	(CALIF.)(J)
6	911 110 420 02	intake pipe cyl. 6	80-		
7	* 930 110 197 12	gasket		6	
8	999 084 601 02	lock nut M 8		12	
9	A 911 110 106 13	housing	-79	1	
9	911 110 906 00	housing		1	
9	A 911 110 106 15	housing	-79	1	(CAL)(J)
9	911 110 906 00	housing		1	(CAL)(J)
9	A 911 110 104 24	housing	80	1	

Pos	Part Number	Name	Remarks	Qty	Model
9	911 110 904 00	housing		1	
9	A 911 110 104 29	housing	81-	1	
9	911 110 904 00	housing		1	
9A	930 110 299 00	plug		1	
10	928 110 158 01	rubber sleeve	-79	6	
10	930 110 885 00	rubber sleeve	80-	6	
11	999 512 230 02	hose clamp S 51/9	-79	12	
11	999 512 267 02	hose clamp S 45/9	80-	12	
12	A 900 025 007 02	washer		12	
12	900 025 007 02	washer A 8,4		12	
13	911 110 185 02	filter element		1	
14	930 110 184 00	cover		1	
15	930 110 365 00	restraining strap		2	
16	911 110 356 01	support		2	
17	900 143 126 02	tapping screw		2	
18	911 110 133 02	strut		1	
19	911 110 269 00	strut	-80	1	
19	911 110 132 00	strut	81-	1	
20	911 110 154 00	bonded rubber buffer		2	
21	900 025 007 02	washer A 8,4		1	
22	900 151 008 02	washer B 8,4		2	
23	N 012 241 8	spring washer B 8		5	
24	900 076 025 02	hexagon nut M 8		4	
25	A N 010 239 11	hexagon-head bolt		1	
-	N 010 239 11	hexagon-head bolt M 8 X 18		1	

Pos	Part Number	Name	Remarks	Qty	Model
26	* 911 110 394 02	gasket		1	
27	999 511 111 02	clip	80-	1	
27A	A N 012 226 5	spring washer	80-	1	
27A	N 012 226 5	spring washer B 6		1	
27B	999 072 005 09	hexagon-head bolt M 6 X 12	80-	1	
28	911 108 291 00	plug	-79	1	
29	911 110 886 03	sleeve		6	
30	999 701 446 40	o-ring		6	
31	900 124 002 02	screw plug AM 14 X 1,5		1	
32	900 123 007 70	sealing ring A 14-18		1	
33	911 125 341 01	union	/LL SPM	1	
33	911 125 341 02	union M >> 640 2869 M >> 630 8274	/LL	1	
33	930 110 357 00	union M 640 2870 >> M 630 8275 >>	80-	1	
34	930 110 267 00	connecting socket	/LL	1	
-	A 999 239 018 40	hose		*	
-	999 181 022 51	hose 12 X 19		*	
35	-	220 MM	-79	1	
35	-	110 MM	80-	1	
36	999 512 554 00	hose clamp	/LL	2	
37	999 511 115 02	clip	80	1	
38	930 110 374 01	retaining bracket	81-	1	
39	930 110 361 00	support	81-	1	
40	N 014 117 9	oval-head screw M 4 X 16	81-	1	
41	N 011 522 14	washer A 4,3	81-	1	

Model	Year	MG	SG	Illustration	Restrictions	Update			
911	83	1	06	106-00		203	10:52	18.08.2006	PORSCHE PET PORSCHE

Pos	Part Number	Name	Remarks	Qty	Model	Pos	Part Number	Name	Remarks	Qty	Model
		- -- E N D -- -									

Model	Year	MG	SG	Illustration	Restrictions	Update	10:52	18.08.2006	PORSCHE PET PORSCHE
911	83	1	06	106-05		203			

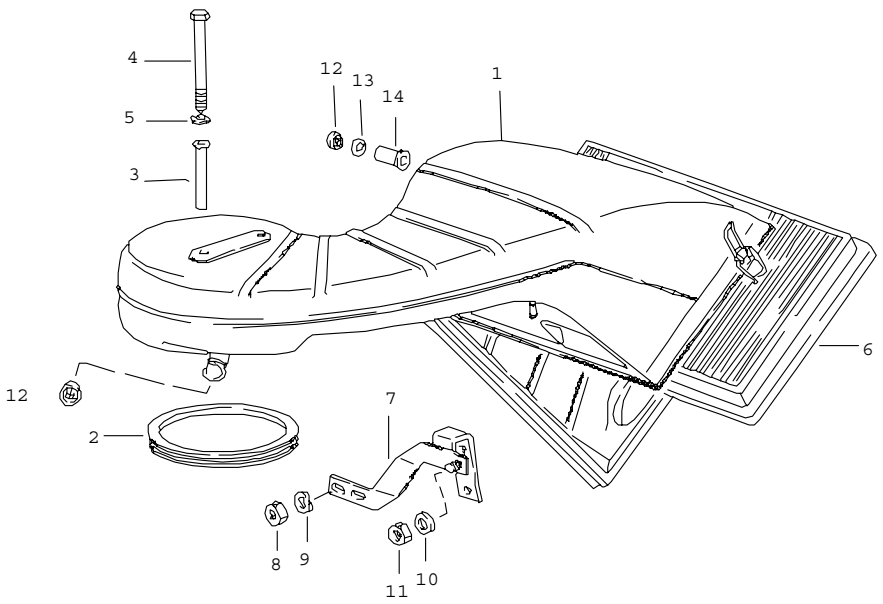

Pos	Part Number	Name	Remarks	Qty	Model
		air cleaner			TURBO
1	930 110 020 01	air cleaner		1	
2	* 930 110 122 00	sealing ring		1	
-	930 110 121 02	support ring		1	
3	930 110 436 01	spacer sleeve		2	
4	900 074 023 02	hexagon-head bolt		2	
5	A N 011 524 7	washer		2	
5	N 011 524 7	washer 6,4		2	
6	930 110 185 02	air cleaner cartridge		1	
7	A 930 110 331 02	support		1	
7	930 110 331 02	support		1	
8	999 084 423 02	lock nut		1	
9	A 900 025 007 02	washer		2	
9	900 025 007 02	washer 8,4		2	
10	A N 012 241 8	spring washer		2	
10	N 012 241 8	spring washer B 8		2	
11	900 076 025 02	hexagon nut M 8		2	
12	911 106 415 01	pipe		1	M 026
13	999 591 369 02	locking washer		1	M 026
14	911 106 415 01	pipe		1	M 026
		- -- E N D -- -			

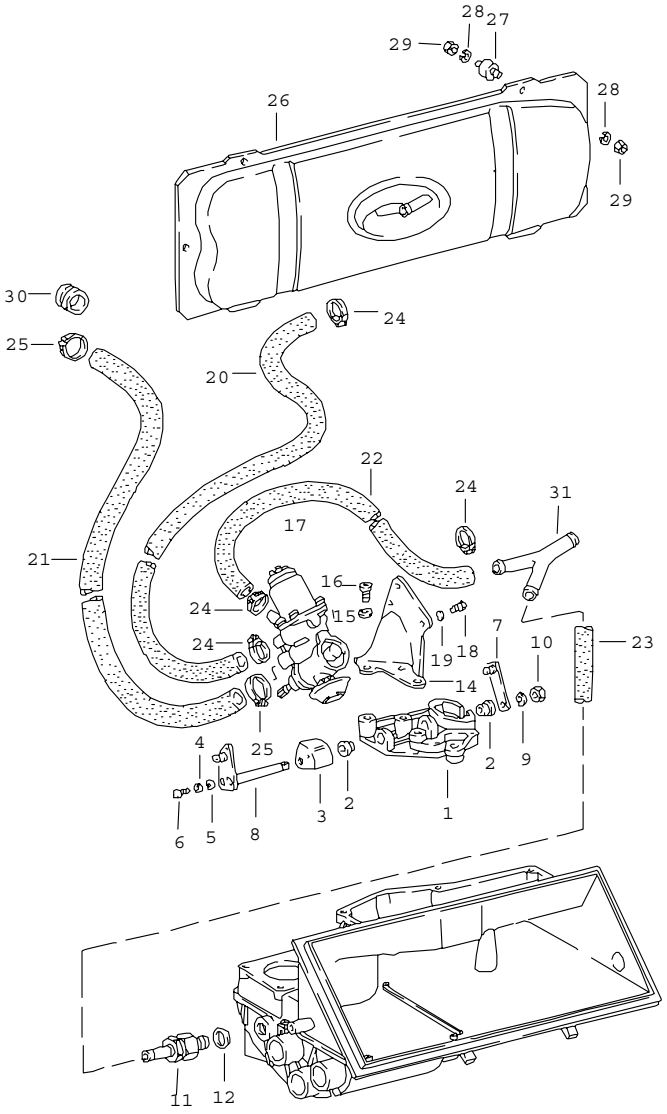

Pos	Part Number	Name	Remarks	Qty	Model
		SPM- vacuum system for clutch release			
1	911 110 234 00	bracket		1	
2	901 423 253 00	bearing sleeve		2	
3	911 125 027 01	disc cam		1	
4	900 089 011 02	washer 4		1	
5	A N 012 224 3	spring washer		1	
5	N 012 224 3	spring washer B 4		1	
6	900 067 080 02	pan-head screw M 4 X 10		1	
7	911 110 110 00	lever		1	
8	911 110 060 01	lever		1	
9	A N 012 241 8	spring washer		1	
9	N 012 241 8	spring washer B 8		1	
10	900 076 025 02	hexagon nut M 8		2	
(11)	911 125 341 01	union	/LL	1	
12	* 900 123 007 70	sealing ring A 14 X 18		1	
14	911 125 331 01	support		1	
15	N 012 241 8	spring washer B 8		3	
16	N 014 707 2	pan-head screw M 8 X 15		3	
17	905 108 370 02	control valve		1	
18	999 072 005 09	hexagon-head bolt M 6 X 12		3	
19	N 012 226 5	spring washer B 6		3	
20	911 125 703 00	vacuum hose 12 X 3,5 550 MM		1	

Pos	Part Number	Name	Remarks	Qty	Model
21	999 181 282 50	vacuum hose 360 MM		1	
22	A 911 125 703 02	vacuum hose	/LL	1	
22	999 181 022 51	hose 130 MM		1	
23	A 911 125 703 01	vacuum hose		1	
23	999 181 022 51	hose 220 MM		1	
24	999 512 554 00	hose clamp		4	
25	A N 023 565 3	hose clamp		2	
25	N 023 565 3	hose clamp S 21/9 ZY. VERZ.		2	
26	911 116 033 00	vacuum tank		1	
27	901 504 853 20	bearing		2	
28	A 900 027 014 01	lock ring		8	
28	N 012 006 4	lock ring B 6		8	
29	900 076 010 02	hexagon nut M 6		8	
30	999 702 064 50	rubber sleeve		1	
31	911 125 342 00	y-piece	/LL	1	
		- -- E N D -- -			

Pos	Part Number	Name	Remarks	Qty	Model

Model	Year	MG	SG	Illustration	Restrictions	Update	10:53	18.08.2006	PORSCHE PET PORSCHE
911	83	1	07	107-00		203			

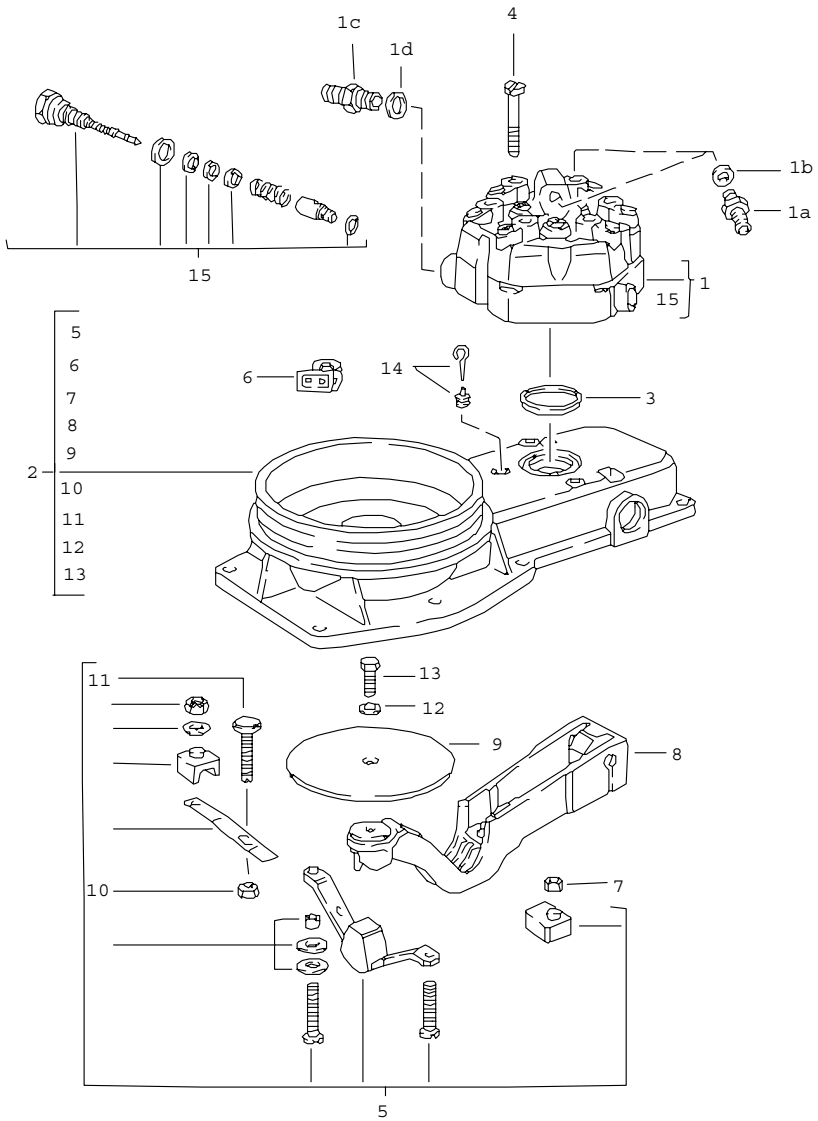

Pos	Part Number	Name	Remarks	Qty	Model
		mixture control unit			911 SC
1	911 110 967 00	fuel distributor		1	M930.04/05
1	911 110 967 X	fuel distributor		1	M930.04/05 M930.06/15
1	911 110 971 00	fuel distributor		1	M930.07/08
1	911 110 971 X	fuel distributor		1	M930.07/08 M930.16/17
1A	930 110 629 00	screw socket	81-	8	
1B A	900 123 050 30	sealing ring	81-	8	
1B	900 123 115 30	sealing ring A 8 X 11,5	81-	8	
1C	900 283 001 02	connection piece	81-	2	
1D	900 123 116 30	sealing ring A 12 X 15,5	81-	2	
2	911 110 965 00	mass air flow		1	M930.04/05 M930.06/15
2 A	911 110 973 00	mass air flow	80	1	M930.07/08
2	911 110 975 00	mass air flow use also:	80	1	M930.07/08
-	911 110 934 00	plug		1	
2	911 110 975 00	mass air flow	81-	1	M930.16/17
3	911 110 932 00	sealing ring		1	
4	911 110 933 00	pan-head screw M 5 X 50		3	
5 A	911 110 947 02	stop stop		1	
5	911 110 947 02	set stop		1	
6	911 110 929 00	safety contact		1	
7	911 110 945 00	lock nut		2	
8	911 110 939 00	control lever		1	
9	911 110 943 00	air flow sensor plate	-79	1	
9	911 110 943 02	air flow sensor plate	80-	1	
10	911 110 950 00	hexagon nut		1	

Pos	Part Number	Name	Remarks	Qty	Model
11	911 110 949 00	adjusting screw		1	
12	A N 012 226 5	spring washer		1	
12	N 012 226 5	spring washer A 6		1	
13	911 110 944 00	hexagon-head bolt		1	
14	A 911 110 934 00	plug		1	M930.17
14	911 110 934 00	plug		1	
(14)	930 110 647 02	shear bolt		1	M930.16
15	A 928 110 920 01	parts kit	-80	1	
15	928 110 920 01	parts kit		1	
		- -- E N D -- -			

Pos	Part Number	Name	Remarks	Qty	Model

Model	Year	MG	SG	Illustration	Restrictions	Update	10:53	18.08.2006	PORSCHE PET PORSCHE
911	83	1	07	107-05		203			

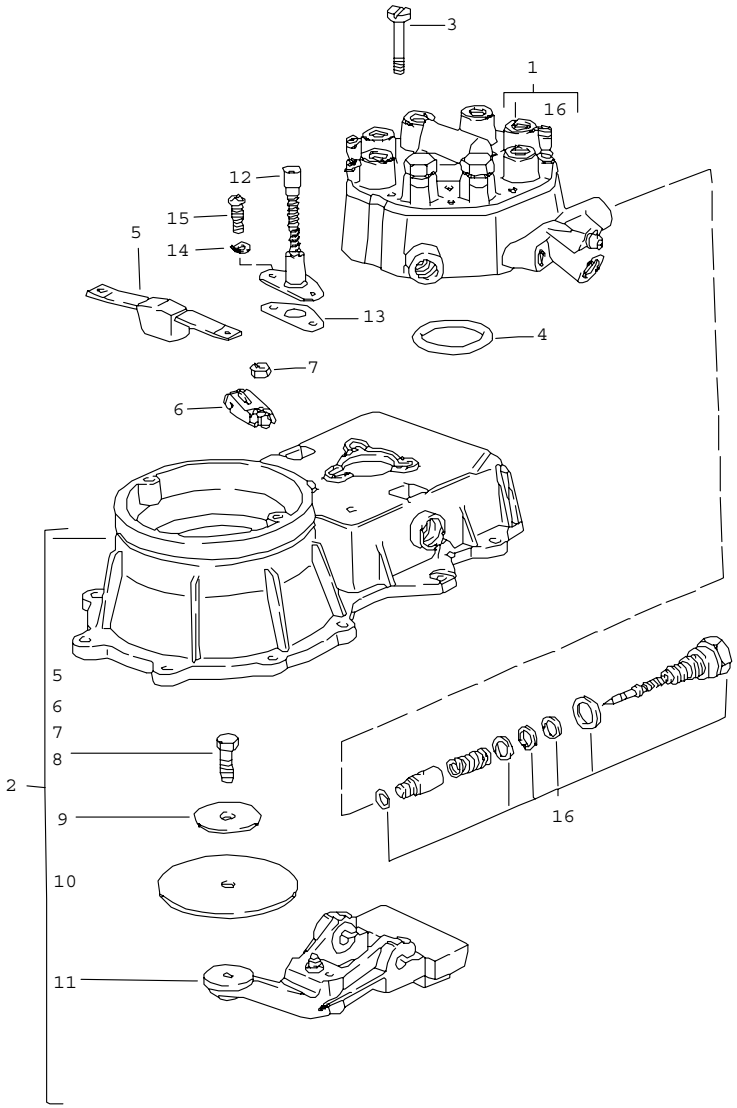

Pos	Part Number	Name	Remarks	Qty	Model
		mixture control unit			TURBO
1	> 930 110 909 00	fuel distributor		1	
2	930 110 907 00	mass air flow		1	
3	900 146 045 02	oval-head screw AM 5 X 45		3	
4	911 110 936 01	gasket		1	
5	911 110 961 00	stop		1	
6	911 110 929 00	safety contact		1	
7	911 110 945 00	lock nut		1	
8	911 110 944 01	hexagon-head bolt		1	
9	911 110 960 00	support washer		1	
10	911 110 943 01	air flow sensor plate		1	
11	911 110 959 00	control lever		1	
12	930 110 910 02	adjusting key		1	
13	930 110 911 00	gasket		1	
14	N 012 005 3	lock ring B 5		2	
15	N 014 128 13	oval-head screw AM 5 X 8		2	
16	A 928 110 920 01	parts kit	-80	1	
16	928 110 920 01	parts kit		1	
		- -- E N D -- -			

Model	Year	MG	SG	Illustration	Restrictions	Update	10:53	18.08.2006	PORSCHE PET PORSCHE
911	83	1	07	107-10		203			

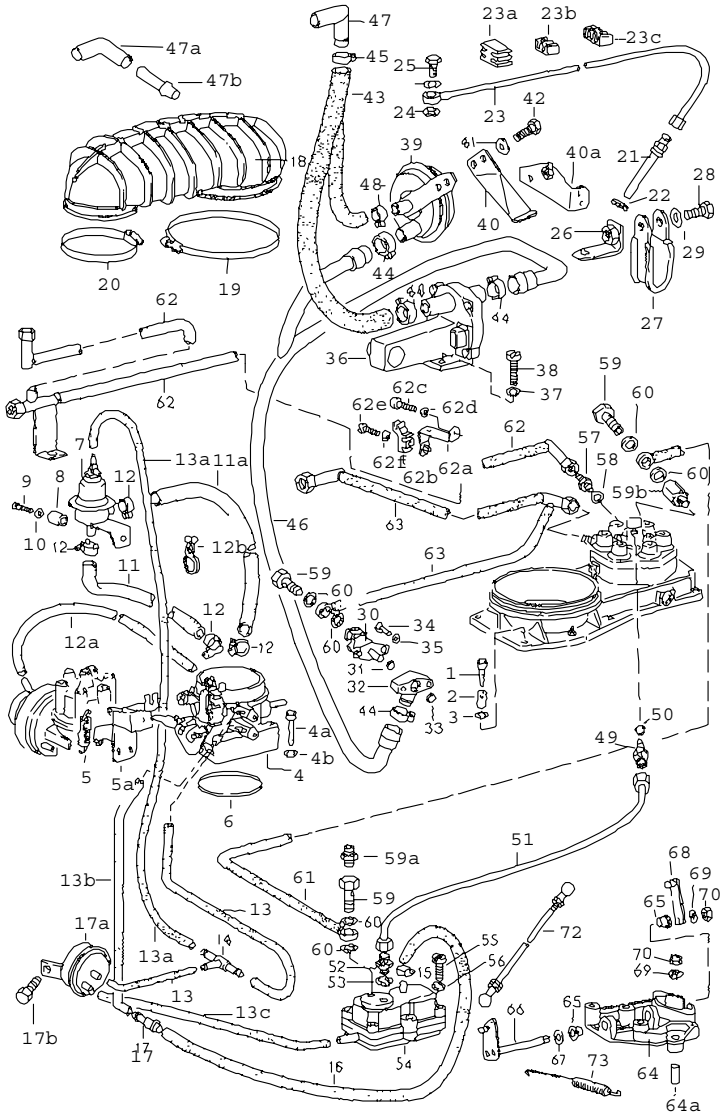

Pos	Part Number	Name	Remarks	Qty	Model
		k-jetronic			911 SC M930.03/04 M930.05/06 M930.09/10 M930.13/15 M930.19
1	900 067 089 02	pan-head screw M 6 X 25		6	
2	911 110 364 00	compression spring		6	
3	900 031 011 02	washer 6,4		6	
4	930 110 248 02	throttle housing 63 $	-79	1	
-	930 110 292 00	plug	-80	1	
4A	900 067 013 02	pan-head screw M 6 X 35		4	
4B	N 011 524 7	washer		4	
5	930 110 497 00	tension spring		1	
5A	911 110 918 01	support for throttle housing	-80	1	
6	* 999 701 124 40	o-ring 67,5 X 4		1	
7	911 110 220 00	vacuum limiter		1	
8	911 110 591 00	spacer sleeve		1	
9	N 010 220 3	hexagon-head bolt M 6 X 28		1	
10	N 012 226 5	spring washer B 6		1	
-	N 020 359 1	hose 9 X 2,5		*	
11	-	190 MM		1	
11A	-	110 MM		1	
12	N 023 577 2	hose clamp A 9 X 14		4	
-	999 239 020 40	hose 3,2 X 7 red	80-	*	

Pos	Part Number	Name	Remarks	Qty	Model
-	N 020 353 5	hose		*	
-	N 020 353 5	hose 3,5 X 2		*	
13	-	245 MM		1	
13A	-	30 MM		1	
13B	-	370 MM		2	
13C	-	330 MM		1	
14	999 137 004 40	t-socket		1	
15	N 023 577 2	hose clamp A 9 X 14		1	
-	999 181 709 50	hose 8 X 14		*	
16	-	40 MM		1	
17	930 110 273 02	reducing socket		1	
-	930 110 292 00	plug		1	
17A	911 606 106 01	thermo valve	-79	1	
18	930 110 358 05	air box		1	
19	999 512 303 02	hose clamp S 131/9		1	
20	999 512 302 02	hose clamp S 85/9		1	
21	911 110 225 01	injector valve		6	
22	* 999 701 423 40	o-ring		6	
23	911 110 093 11	injection line cylinder 1 cylinder 2 cyl. 3	-80	3	
23	911 110 093 12	injection line cyl. 4 cylinder 5 cyl. 6	-80	3	
24	* 900 123 115 30	sealing ring A 8 X 11,5		8	
25	911 110 899 00	banjo bolt		6	
26	911 110 238 00	bracket	-80	1	
27	999 511 097 02	clip		1	
28	999 072 005 09	hexagon-head bolt M 6 X 12		1	
29	N 012 226 5	spring washer B 6		1	
30	911 606 107 01	start valve		1	
31	* 999 701 395 50	o-ring 7-2 B		1	
32	911 110 264 00	intermediate piece		1	
33	999 701 210 40	o-ring OR 20-2,5		1	
34	900 067 150 02	pan-head screw M 5 X 32		2	
35	A 900 028 007 02	spring washer		2	
35	N 012 222 4	spring washer B 5		2	
36	911 606 102 01	auxiliary air regulator	-82	1	
36	911 606 102 04	auxiliary air regulator		1	(USA)
37	A N 012 226 5	spring washer		2	
37	N 012 226 5	spring washer A 6		2	
38	A N 014 740 2	pan-head screw		2	
36	N 014 740 2	pan-head screw M 6 X 16		2	
39	911 110 273 00	additional air valve	-79	1	
40	911 110 274 01	support		1	
40A	930 110 355 01	retaining bracket	80-	1	
41	N 012 226 5	spring washer B 6		2	
42	A N 010 210 13	hexagon-head bolt		2	
42	N 010 210 13	hexagon-head bolt M 6 X 10		2	
43	911 110 276 02	hose line		1	
44	N 024 162 1	hose clamp S 25/9		4	

Pos	Part Number	Name	Remarks	Qty	Model
45	N 024 141 2	hose clamp 9 X 31 ZY		2	
46	911 110 277 01	pipeline		1	
47	911 110 286 00	connecting pipe		1	
47A	930 107 286 00	connecting pipe	-81	1	
47B	901 107 729 00	backfire grid	-81	1	
48	999 512 045 02	hose clamp S 22/9		1	
49	911 110 160 01	screw socket	-80	1	
50	A 900 123 050 30	sealing ring		1	
50	900 123 115 30	sealing ring		1	
51	930 110 502 00	fuel line	-80	1	
52	900 915 004 02	connection piece		1	
54	911 606 105 09	warm-up valve	-79	1	
54	911 606 105 JX	warm-up valve	-79	1	
54	911 606 105 09	warm-up valve		1	
54	911 606 105 JX	warm-up valve		1	
55	A N 044 703 3	pan-head screw		2	
55	N 044 703 3	pan-head screw M 6 X 45		2	
56	A N 012 226 5	spring washer		2	
56	N 012 226 5	spring washer A 6		2	
57	A N 020 704 2	connection piece		2	
57	N 020 704 2	connection piece		2	
58	* 900 123 116 30	sealing ring A 12 X 15,5		2	
59	911 110 899 00	banjo bolt	-80	3	
60	* 900 123 115 30	sealing ring A 8 X 11,5		6	
61	930 110 513 00	fuel line	-80	1	
62	930 110 514 00	fuel line	-80	1	
63	930 110 570 00	fuel line	-80	1	
64	911 110 234 00	bracket		1	
64A	901 110 236 00	spacer tube		1	
65	901 423 253 00	bearing sleeve		2	
66	911 110 060 01	lever		1	
67	A 900 031 001 02	washer		1	
67	900 025 007 02	washer 8,4		1	
68	911 110 110 00	lever		1	
69	N 012 241 8	spring washer		4	
70	900 076 025 02	hexagon nut		4	
72	A 911 110 077 03	pull rod		1	
72	911 110 077 01	pull rod		1	
73	911 110 165 02	tension spring		1	
		- -- E N D -- -			

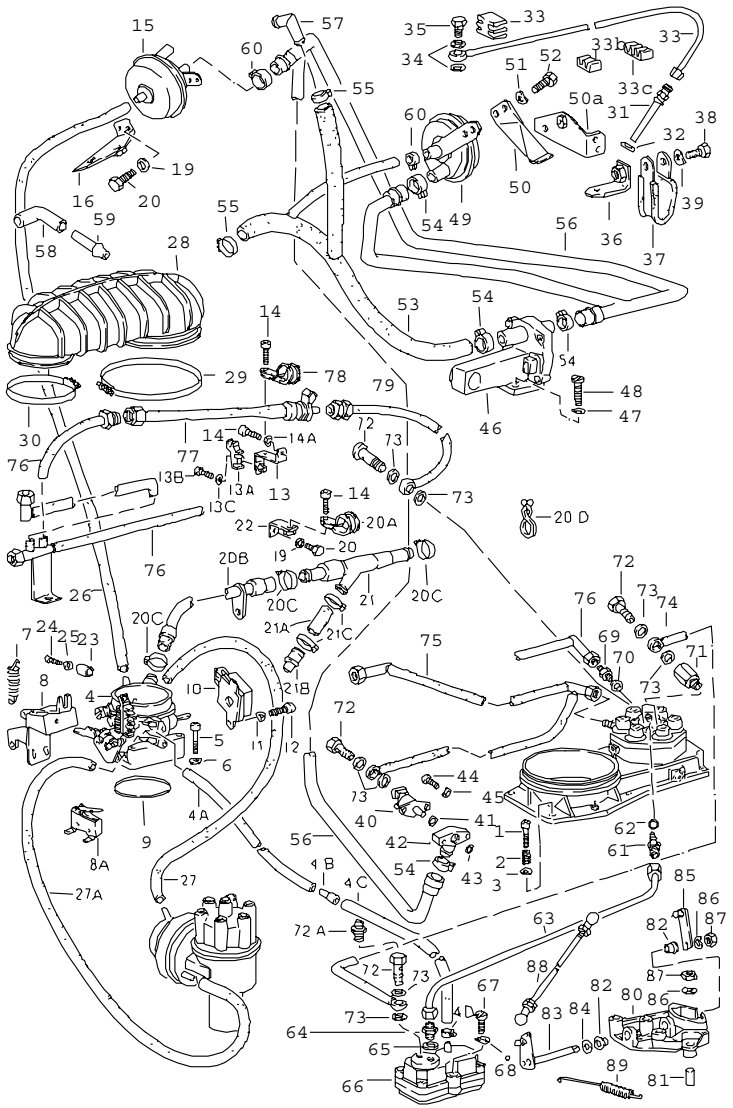

Pos	Part Number	Name	Remarks	Qty	Model
		k-jetronic			911 SC M930.07/08 M930.16/17
1	A 900 067 089 02	pan-head screw		6	
1	900 067 089 02	pan-head screw M 6 X 25		6	
2	911 110 364 00	compression spring		6	
3	900 031 011 02	washer 6,4		6	
4	930 110 248 05	throttle housing 63 $ M >> 640 2869 M >> 630 8274		1	
4	930 110 248 08	throttle housing 63 $ M 640 2870 >> M 630 8275 >>	-80	1	
4	A 930 110 248 09	throttle housing 63 $	81	1	(USA)
4	A 930 110 248 12	throttle housing 63 $	81	1	(USA)
4	930 110 248 15	throttle housing 63 $	82-	1	(USA)
4	A 930 110 248 13	throttle housing 63 $	81-	1	(J)
4	930 110 248 13	throttle housing 63 $	81-	1	(J)
-	930 110 292 00	plug		1	
-	N 020 363 1	hose 15 X 2,5 370 MM		* 1	
4B	930 110 273 02	reducing socket		1	
-	999 239 006 40	hose 8 X 14 40 MM		* 1	
4D	N 023 577 2	hose clamp A 9 X 14		1	
5	900 067 013 02	pan-head screw M 6 X 35		4	

Pos	Part Number	Name	Remarks	Qty	Model
6	N 012 226 5	spring washer B 6		4	
7	930 110 497 00	tension spring		1	
8	911 110 918 01	support	-80	1	
8	911 110 918 02	support for throttle housing 930 110 248 09 930 110 248 10	81-	1	
8	911 110 918 03	support for throttle housing 930 110 248 12 930 110 248 13	81-	1	
8A	911 606 131 00	alarm switch	81-	1	(USA)
9	999 701 124 40	o-ring 67,5 X 4		1	
10	930 606 119 00	throttle-valve switch		1	
10	930 606 119 01	throttle-valve switch	81-	1	(USA)
11	A N 012 224 3	spring washer		2	
11	N 012 224 2	spring washer B 4		2	
12	900 067 175 02	pan-head screw M 4 X 18		2	
(13)	930 110 371 01	bracket M >> 640 2869 M >> 630 8274		1	
(13)	930 110 371 02	bracket M 640 2870 >> M 630 8275 >>		1	
13	930 110 374 00	retaining bracket	81-	1	
13A	930 110 361 00	support	81-	1	
13B	N 014 117 9	oval-head screw M 4 X 16	81-	1	
13C	N 011 522 14	washer A 4,3	81-	1	
14	900 075 341 02	screw M 6 X 25		1	
14A	N 012 226 5	spring washer		1	
15	930 110 190 00	vacuum limiter		1	
16	930 110 355 01	retaining bracket		1	
19	N 011 524 7	washer 6,4		3	
20	999 072 005 09	hexagon-head bolt M 6 X 12		4	
20A	N 020 647 1	clamp	-80	1	
20B	930 110 328 00	pipeline M >> 640 2869 M >> 630 8274		1	
20B	930 110 328 01	pipeline M 640 2870 >> M 630 8275 >>		1	
20CA	999 512 056 02	hose clamp		4	
20C	999 512 554 00	hose clamp		4	
20D	999 651 154 40	cable tie	81-	1	
21	035 133 753 A	venturi tube		1	
-	999 239 019 40	vacuum hose 15 X 22		*	
21A	-	110 MM		1	
21A	-	220 MM		1	
21B	930 110 276 00	reducing socket		1	
21C	N 900 170 01	hose clamp		2	
22	930 110 481 00	retaining bracket	-80	1	
23	911 110 591 00	spacer sleeve		1	
24	A N 010 220 3	hexagon-head bolt		1	
24	N 010 220 3	hexagon-head bolt M 6 X 28		1	
25	N 012 226 5	spring washer B 6		1	
-	N 020 353 5	hose		*	
-	N 020 353 5	hose 3,5 X 2		*	
26	-	750 MM		1	

Pos	Part Number	Name	Remarks	Qty	Model
-	999 239 020 40	hose red 3,2 X 7		*	
27	-	930 MM		1	
-	999 239 021 40	hose blue 3,5 X 7		*	
27A	-	1130 MM		1	
28	930 110 358 05	air box		1	
29	999 512 303 02	hose clamp S 131/9		1	
30	999 512 302 02	hose clamp S 85/9		1	
31	911 110 225 01	injector valve		6	
32	* 999 701 423 40	o-ring		6	
33	911 110 093 11	injection line cylinder 1 cylinder 2 cyl. 3	-80	3	
33	911 110 093 12	injection line cyl. 4 cylinder 5 cyl. 6	-80	3	
(33)	930 110 485 00	injection line cylinder 1	81-	1	
(33)	930 110 486 00	injection line cylinder 2	81-	1	
(33)	930 110 487 00	injection line cyl. 3	81-	1	
(33)	930 110 488 00	injection line cyl. 4	81-	1	
(33)	A 930 110 489 02	injection line cylinder 5	81-	1	
(33)	930 110 489 02	injection line cylinder 5	83-	1	
(33)	930 110 490 00	injection line cyl. 6	81-	1	
33A	928 110 149 00	terminal	81-	2	
33B	928 110 150 00	terminal	81-	3	
33C	928 110 150 01	terminal	81-	1	
34	* 900 123 115 30	sealing ring A 8 X 11,5		9	
35	911 110 899 00	banjo bolt		6	
36	911 110 238 00	bracket	-80	1	
37	999 511 097 02	clip		1	
38	900 075 010 02	hexagon-head bolt M 6 X 12		1	
39	999 072 005 09	hexagon-head bolt M 6		1	
40	911 606 107 01	start valve		1	
41	* 999 701 395 50	o-ring 7-2 B		1	
42	911 110 264 00	intermediate piece		1	
43	999 701 210 40	o-ring OR 20 - 2,5		1	
44	900 067 150 02	pan-head screw M 5 X 32		2	
45	N 012 222 4	spring washer B 5		2	
46	A 911 606 102 05	auxiliary air regulator		1	
46	911 606 102 09	auxiliary air regulator		1	
47	A N 012 226 5	spring washer		2	
47	N 012 226 5	spring washer A 6		2	
48	A N 014 740 2	pan-head screw		2	
48	N 014 740 2	pan-head screw M 6 X 16		2	
49	911 110 273 01	additional air valve		1	
50	911 110 274 01	support		1	
50A	930 110 355 01	retaining bracket	80-	1	
51	N 012 226 5	spring washer B 6		2	
52	A N 010 210 13	hexagon-head bolt		2	

Pos	Part Number	Name	Remarks	Qty	Model
52	N 010 210 13	hexagon-head bolt M 6 X 10		2	
53	911 110 276 03	hose line		1	
54	N 024 162 1	hose clamp S 25/9		5	
55	N 024 141 2	hose clamp S 31/9		2	
56	911 110 277 02	pipeline		1	
57	911 110 286 00	connecting pipe		1	
58	930 107 286 00	connecting pipe	-80	1	
59	901 107 729 00	backfire grid	-80	1	
60	999 512 045 02	hose clamp S 22/9		2	
61	911 110 160 01	screw socket	-80	1	
62	A 900 123 050 30	sealing ring		1	
62	900 123 115 30	sealing ring		1	
63	930 110 502 00	fuel line	-80	1	
(63)	A 930 110 494 00	fuel line	81-	1	
(63)	930 110 494 01	fuel line	81-	1	
64	900 915 004 02	connection piece		1	
65	* 900 123 144 30	sealing ring A 10 X 13,5		1	
66	911 606 105 10	warm-up valve		1	M930.07/08
66	911 606 105 KX	warm-up valve		1	M930.07/08 M930.17
66	911 606 105 08	warm-up valve		1	M930.16
66	911 606 105 HX	warm-up valve		1	M930.16
67	A 900 067 067 02	pan-head screw		2	
67	N 014 749 2	pan-head screw M 6 X 45		2	
68	N 012 226 5	spring washer A 6		2	
69	A N 020 704 2	connection piece		2	
69	N 020 704 2	connection piece		2	
70	A 900 123 043 30	sealing ring		2	
70	900 123 116 30	sealing ring A 12 X 15,5		2	
71	930 110 429 00	screw socket	-80	1	
72	911 110 899 00	banjo bolt	-80	4	
72A	930 110 629 00	screw socket	81-	1	
73	* 900 123 115 30	sealing ring A 8 X 11,5		8	
74	930 110 513 00	fuel line	-80	1	
(74)	930 110 495 00	fuel line	81-	1	
75	930 110 570 00	fuel line	-80	1	
(75)	930 110 491 00	fuel line	81-	1	
76	930 110 090 00	fuel line	-80	1	
(76)	930 110 492 00	fuel line	81-	1	
77	930 110 095 01	cycle valve	-80	1	
77	930 110 095 01	cycle valve	81-	1	
78	999 511 080 02	clamp		1	
79	930 110 080 00	fuel line	-80	1	
(79)	930 110 493 00	fuel line	81-	1	
80	911 110 234 00	bracket		1	
81	901 110 236 00	spacer tube		1	
82	901 423 253 00	bearing sleeve		2	
83	911 110 060 01	lever		1	
84	A 900 031 001 02	washer		1	
84	900 025 007 02	washer 8,4		1	
85	911 110 110 00	lever		1	
86	N 012 241 8	spring washer		4	
87	A 900 076 025 02	hexagon nut		4	
87	900 076 025 02	hexagon nut		4	

Model	Year	MG	SG	Illustration	Restrictions	Update			
911	83	1	07	107-15		203	10:54	18.08.2006	PORSCHE PET PORSCHE

Pos	Part Number	Name	Remarks	Qty	Model	Pos	Part Number	Name	Remarks	Qty	Model
88	A 911 110 077 03	pull rod		1							
88	A 911 110 077 01	pull rod		1							
88	911 110 077 00	pull rod		1							
89	911 110 165 02	tension spring		1							
		- -- E N D -- -									

Model	Year	MG	SG	Illustration	Restrictions	Update	10:54	18.08.2006	PORSCHE PET PORSCHE
911	83	1	07	107-20		203			

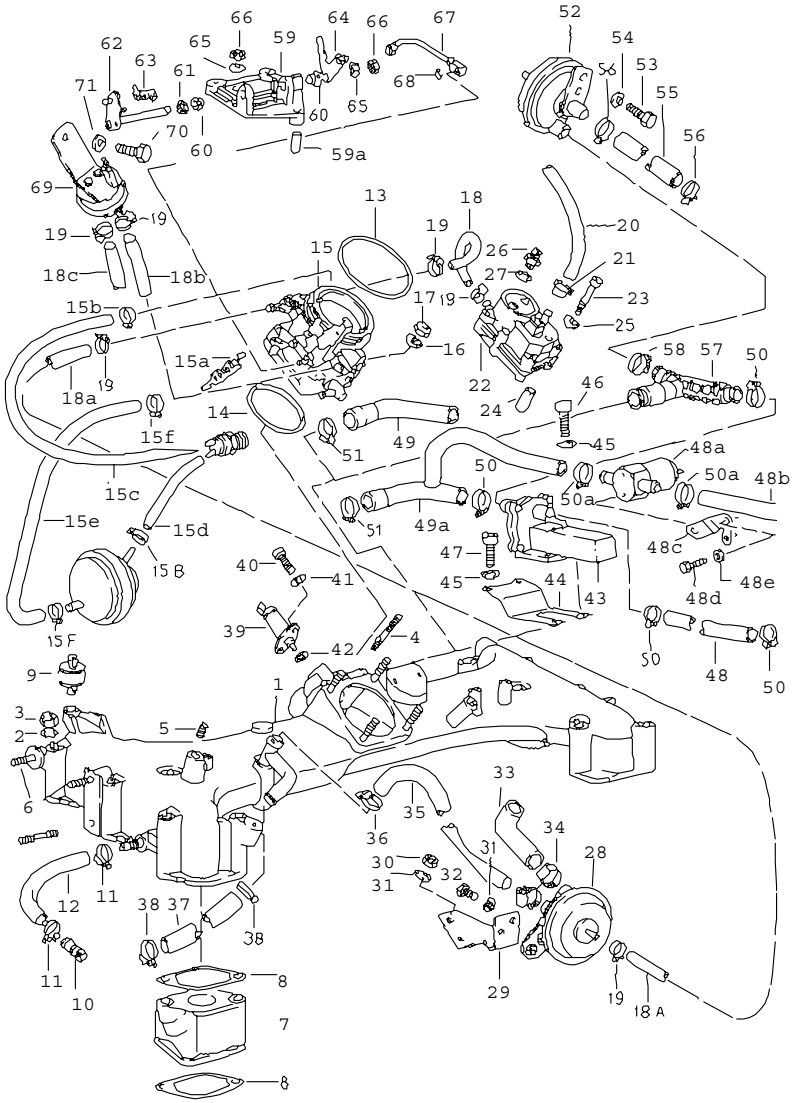

Pos	Part Number	Name	Remarks	Qty	Model
		k-jetronic I			TURBO M930.60/61 M930.62/66
1	930 110 034 00	intake manifold	80-	1	(CDN)
1	930 110 034 01	intake manifold	-79	1	
2	N 012 241 8	spring washer B 8		12	
3	900 076 025 02	hexagon nut M 8		12	
4	999 062 093 02	screw BM 6 X 35		4	
5	999 504 004 00	threaded insert M 8		3	
6	A 999 062 009 02	stud		3	
6	999 062 009 02	stud BM 8 X 28		3	
7	930 110 141 03	flange		6	
8	* 930 110 197 10	gasket		12	
9	930 110 194 00	bonded rubber buffer		3	
10	930 110 267 00	connecting socket		1	
11	999 512 554 00	hose clamp		2	
-	999 239 011 40	hose 12 X 19		*	
12	-	270 MM		1	
13	* 999 701 477 40	round seal		1	
14	* 999 701 468 40	round seal		1	
15	930 110 250 03	throttle housing		1	M930.60
15	930 110 250 08	throttle housing		1	M930.66
15	930 110 250 05	throttle housing		1	M930.61/62
15A	930 110 497 00	tension spring		1	
15B	999 512 361 02	hose clamp		2	M930.66
-	999 239 020 40	hose red 3,2 X 7		X	M930.66

Pos	Part Number	Name	Remarks	Qty	Model
15C	-	390 MM		1	M930.66
15D	-	1000 MM		1	M930.66
-	999 239 022 40	hose blue 4 X 10		X	M930.66
15E	-	575 MM		1	M930.66
15F	999 512 159 02	hose clamp		2	M930.66
16	N 011 524 7	washer		4	
17	900 076 010 02	hexagon nut M 6		4	
-	999 239 013 40	hose 5 X 11		*	
18	-	150 MM		1	
18A	-	405 MM		1	
18B	-	300 MM		1	
-	-	500 MM		1	
18C	-	400 MM		1	
19	999 512 082 02	hose clamp		12	
-	999 239 006 40	hose 8 X 14		*	
20	-	100 MM		1	
21	999 512 160 02	hose clamp		4	
22	930 606 105 03	warm-up valve		1	M930.60/61
22	930 606 105 CX	warm-up valve		1	M930.60/61
22	930 606 105 05	warm-up valve		1	M930.62/66
22	930 606 105 EX	warm-up valve		1	M930.62/66
23	N 044 703 3	pan-head screw M 6 X 45		2	
23	900 119 055 02	pan-head screw M 6 X 60		2	
24	911 110 591 00	spacer sleeve	-80	2	
25	N 012 226 5	spring washer A 6		2	
26	900 915 004 02	connection piece		1	
27	* 900 123 144 30	sealing ring A 10 X 13,5		1	
28	930 110 173 00	vacuum limiter		1	
29	930 110 167 00	retaining bracket		1	
30	900 076 010 02	hexagon nut M 6		2	
31	N 012 226 5	spring washer B 6		4	
32	999 072 005 09	hexagon-head bolt M 6 X 12		2	
33	930 110 171 01	hose		1	
34	999 512 237 02	hose clamp		2	
-	999 239 007 40	hose 15 X 24		*	
35	-	90 MM		1	
36	N 024 115 1	hose clamp		2	
-	999 181 284 50	hose 15 X 3,5		*	
37	-	300 MM		1	
38	999 512 045 02	hose clamp		2	
39	930 606 107 01	electric starting valve		1	
40	N 014 740 2	pan-head screw M 6 X 16		2	
41	N 012 226 5	spring washer A 6		2	
42	* 999 701 395 50	o-ring		1	
43	930 606 102 00	auxiliary air regulator	80-	1	(CDN)
43	930 606 102 02	auxiliary air regulator	-79	1	(J)
43	930 606 102 03	auxiliary air regulator	-79	1	
44	930 110 229 01	support		1	
45	N 012 226 5	spring washer B 6		4	

Pos	Part Number	Name	Remarks	Qty	Model
46	999 062 009 02	stud M 6 X 15		2	
47	900 067 008 02	pan-head screw M 6 X 12		2	
48	A 999 239 009 40	hose		1	
48	999 239 009 40	hose 18 X 26 X 180		1	
48A	928 606 215 01	electric air valve		1	M930.66
48B	930 110 403 01	hose		1	M930.66
48C	930 110 623 00	retaining bracket		1	M930.66
48D	N 010 208 5	hexagon-head bolt M6X8		1	M930.66
48E	N 011 524 7	washer A 6,4		1	M930.66
49	930 110 335 00	air hose	80-82	1	(CDN)
49A	930 110 335 01	air hose		1	M930.66
50	999 512 552 00	hose clamp		3	
50A	A 999 512 198 02	hose clamp		2	M930.66
50A	N 023 570 2	hose clamp		2	M930.66
51	N 024 141 2	hose clamp		1	
52	930 110 275 01	additional air valve	-79	1	
53	999 072 005 09	hexagon-head bolt M 6 X 12	-79	2	
54	N 012 226 5	spring washer B 6	-79	2	
-	999 239 007 40	hose 15 X 24	-79	*	
55	-	300 MM	-79	1	
56	999 512 045 02	hose clamp	-79	2	
57	930 110 333 00	air hose	-79	1	
58	N 024 162 1	hose clamp	-79	1	
59	A 930 110 061 02	bracket		1	
59	911 110 091 07	bracket		1	
59A	901 110 236 00	spacer tube		1	
60	901 423 253 00	bearing sleeve		2	
-	999 504 008 00	threaded insert M 6		2	
61	900 025 007 02	washer 8,4		2	
62	930 110 060 02	lever		1	
63	930 110 148 01	spring		1	
64	930 110 110 02	lever		1	
64	930 110 110 06	lever use also:		1	
62	930 110 060 06	lever		1	
63	930 110 148 05	spring		1	
65	N 012 241 8	spring washer B 8		4	
66	900 076 025 02	hexagon nut M 8		4	
67	A 930 110 079 04	pull rod		1	
67	930 110 079 05	pull rod		1	
68	A N 012 434 1	lock washer		1	
68	900 116 003 02	circlip		1	
69	911 606 106 01	thermo valve	-79	1	
70	900 067 008 02	pan-head screw M 6 X 12	-79	1	
71	N 012 226 5	spring washer B 6	-79	1	

- -- E N D -- -

Model	Year	MG	SG	Illustration	Restrictions	Update	10:54	18.08.2006	PORSCHE PET PORSCHE
911	83	1	07	107-25		203			

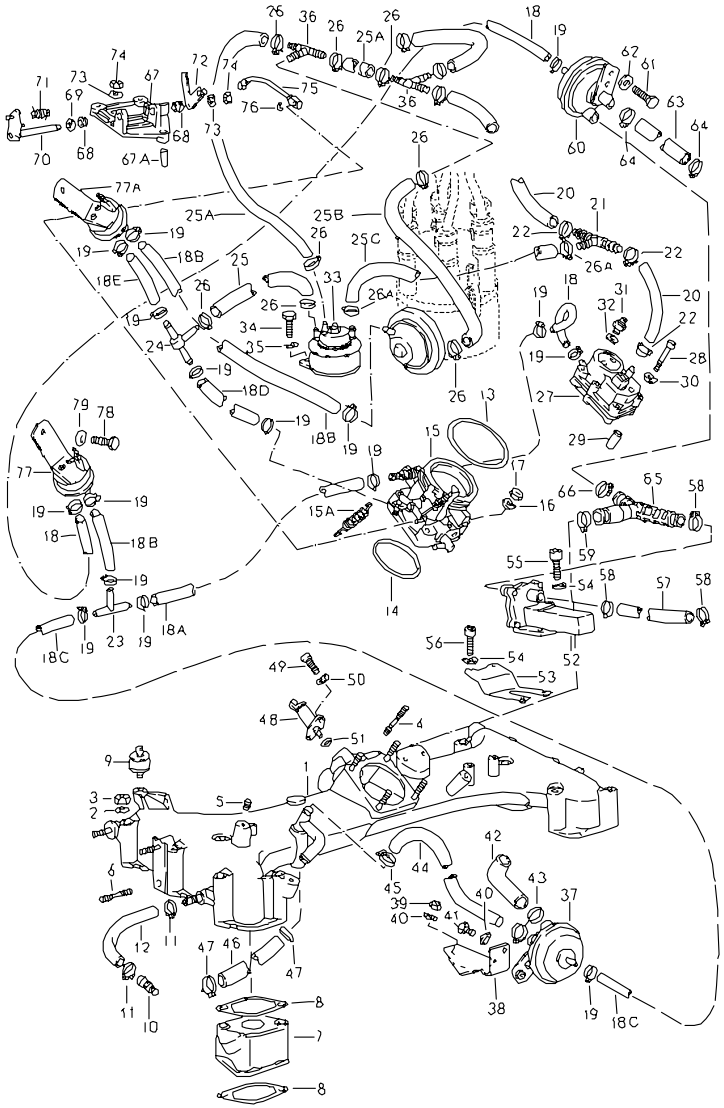

Pos	Part Number	Name	Remarks	Qty	Model
		k-jetronic I			TURBO M930.63/64 M930.65
1	930 110 034 01	intake manifold		1	
2	N 012 241 8	spring washer B 8		12	
3	900 076 025 02	hexagon nut M 8		12	
4	999 062 093 02	screw BM 6 X 35		4	
5	999 504 004 00	threaded insert M 8		3	
6	999 062 009 02	stud BM 8 X 28		3	
7	930 110 141 03	flange		6	
8	* 930 110 197 10	gasket		12	
9	930 110 194 00	bonded rubber buffer		3	
10	930 110 267 00	connecting socket		1	
11	999 512 554 00	hose clamp		2	
-	999 239 011 40	hose 12 X 19		*	
12	-	270 MM		1	
13	* 999 701 477 40	round seal		1	
14	* 999 701 468 40	round seal		1	
15	930 110 250 07	throttle housing		1	
15A	930 110 497 00	tension spring		1	
16	N 012 226 5	spring washer B 6		4	
17	900 076 010 02	hexagon nut M 6		4	
-	999 239 013 40	hose 5 X 11		*	
18	-	150 MM		2	M930.63
18A	-	275 MM		1	M930.63
18B	-	400 MM		2	M930.63

Pos	Part Number	Name	Remarks	Qty	Model
18C	-	350 MM		1	M930.63
(18C)	-	405 MM		1	M930.64/65
18D	-	175 MM		1	
18E	-	85 MM		1	
19	999 512 082 02	hose clamp		16	
-	999 239 006 40	hose 8 X 14		*	
20	-	45 MM		2	
21	999 137 015 40	t-socket		1	
22	999 512 160 02	hose clamp		4	
23	999 137 005 40	t-piece		1	M930.63
24	930 110 271 01	t-piece		1	
-	000 043 204 94	hose 4 X 10		*	
25	-	320 MM		1	
25A	-	75 MM		2	
25B	-	460 MM		1	
25C	-	520 MM		1	
26	999 512 309 02	hose clamp		10	
26A	999 512 069 02	hose clamp		2	
-	N 020 902 1	tie-wrap		2	
-	N 020 902 1	tie-wrap		2	
27	930 606 105 03	warm-up valve		1	
27	930 606 105 CX	warm-up valve		1	
28	A N 044 703 3	pan-head screw		2	
28	N 044 703 3	pan-head screw M 6 X 45		2	
28	900 119 055 02	pan-head screw M 6 X 60		2	
29	911 110 591 00	spacer sleeve		2	
30	N 012 226 5	spring washer		2	
31	900 915 004 02	connection piece		1	
32	A 900 123 003 30	sealing ring		1	
32	900 123 144 30	sealing ring A 10 X 14		1	
33	930 113 197 00	shut-off valve		1	
34	A 900 075 010 02	hexagon-head bolt		2	
34	999 072 005 09	hexagon-head bolt M 6 X 10		2	
35	N 012 226 5	spring washer B 6		2	
36	999 137 004 40	t-socket		2	
37	930 110 173 00	vacuum limiter		1	
38	930 110 167 00	retaining bracket		1	
39	900 076 010 02	hexagon nut M 6		2	
40	N 012 226 5	spring washer B 6		4	
41	999 072 005 09	hexagon-head bolt M 6 X 12		2	
42	930 110 171 01	hose		1	
43	999 512 237 02	hose clamp		2	
-	999 239 007 40	hose 15 X 24		*	
44	-	90 MM		1	
45	N 024 115 1	hose clamp		2	
-	999 181 284 50	hose 15 X 3,5		*	
46	-	300 MM		1	
47	999 512 045 02	hose clamp		2	
48	930 606 107 01	electric starting valve		1	
49	N 014 740 2	pan-head screw M 6 X 16		2	
50	N 012 226 5	spring washer A 6		2	

Pos	Part Number	Name	Remarks	Qty	Model
51	* 999 701 395 50	o-ring		1	
52	930 606 102 03	auxiliary air regulator		1	
53	930 110 229 01	support		1	
54	N 012 226 5	spring washer B 6		4	
55	A 900 067 009 02	pan-head screw		2	
55	900 067 009 02	pan-head screw M 6 X 15		2	
56	A 900 067 008 02	pan-head screw		2	
56	900 067 008 02	pan-head screw M 6 X 12		2	
57	A 999 239 009 40	hose		1	
57	999 239 009 40	hose 18 X 26 X 180		1	
58	N 024 162 1	hose clamp		3	
59	N 024 141 2	hose clamp		1	
60	930 110 275 01	additional air valve		1	
61	999 072 005 09	hexagon-head bolt M 6 X 12		2	
62	N 012 226 5	spring washer B 6		2	
-	999 239 007 40	hose 15 X 24		*	
63	-	300 MM		1	
64	999 512 045 02	hose clamp		2	
65	930 110 333 00	air hose		1	
66	N 024 162 1	hose clamp		1	
67	A 930 110 061 02	bracket		1	
67	911 110 091 07	bracket		1	
67A	901 110 236 00	spacer tube		1	
68	901 423 253 00	bearing sleeve		2	
-	999 504 008 00	threaded insert M 6		2	
69	900 025 007 02	washer 8,4		2	
70	930 110 060 02	lever		1	
71	930 110 148 01	spring		1	
72	930 110 110 03	lever		1	
73	N 012 241 8	spring washer B 8		4	
74	900 076 025 02	hexagon nut M 8		4	
75	A 930 110 079 04	pull rod		1	
75	930 110 079 05	pull rod		1	
76	A N 012 434 1	lock washer		1	
76	900 116 003 02	circlip		1	
77	930 606 106 00	thermo valve	-78	1	M930.63
77	911 606 106 01	thermo valve	79-	1	M930.63
77A	911 606 106 01	thermo valve valve housing		1	
78	900 067 008 02	pan-head screw M 6 X 12		1	M930.63
79	N 012 226 5	spring washer B 6		1	M930.63
		- -- E N D -- -			

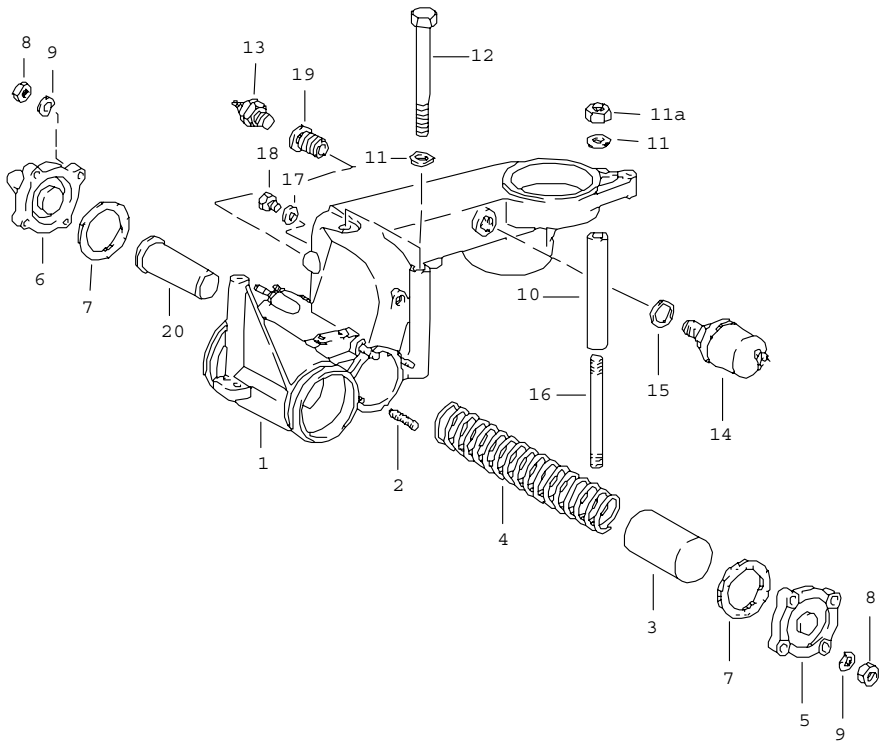

Pos	Part Number	Name	Remarks	Qty	Model
		k-jetronic II			TURBO
1	A 930 110 018 03	valve housing		1	
1	930 110 018 03	valve housing		1	
2	999 062 127 02	stud M 6 X 25		8	
-	999 062 001 02	stud M 6 X 10		2	
-	999 504 004 00	threaded insert M 8 X 2 D		2	
-	999 504 116 00	threaded insert M 10 X 1 X 1 D		1	
-	999 504 117 00	threaded insert M 18 X 1,5 X 0,50		1	
3	930 110 151 00	piston		1	
-	930 110 160 00	spring guide		1	
4	930 110 157 00	compression spring		1	
5	930 110 156 06	cover		1	
6	930 110 056 02	cover		1	
7	* 930 110 149 00	gasket		2	
8	900 076 010 02	hexagon nut M 6		8	
9	N 012 226 5	spring washer B 6		8	
9	N 011 524 7	washer A 6,4		1	
10	930 110 332 00	spacer tube		1	
11	N 012 241 8	spring washer B 8		3	
11A	900 076 025 02	hexagon nut M 8	79-	1	
12	900 074 264 02	hexagon-head bolt M 8 X 135	78	3	
12	900 074 264 02	hexagon-head bolt M 8 X 135	79-	2	

Pos	Part Number	Name	Remarks	Qty	Model
13	930 606 101 00	switch switch		1	
14	993 606 103 00	pressure transmitter boost pressure		1	
15	A 900 123 009 30	sealing ring		1	
15	900 123 106 30	sealing ring A 18 X 24		1	
16	999 062 234 02	stud BM 8 X 135	79-	1	
17	900 123 144 30	sealing ring A 10 X 13,5		1	
18	900 124 023 0A	screw plug CM 10 X 1		1	
19	930 110 367 01	threaded insert M 10 X 1 X 1D		1	
20	930 110 160 00	spring guide		1	
		- -- E N D -- -			

Model	Year	MG	SG	Illustration	Restrictions	Update			
911	83	1	07	107-35		203	10:55	18.08.2006	PORSCHE PET PORSCHE

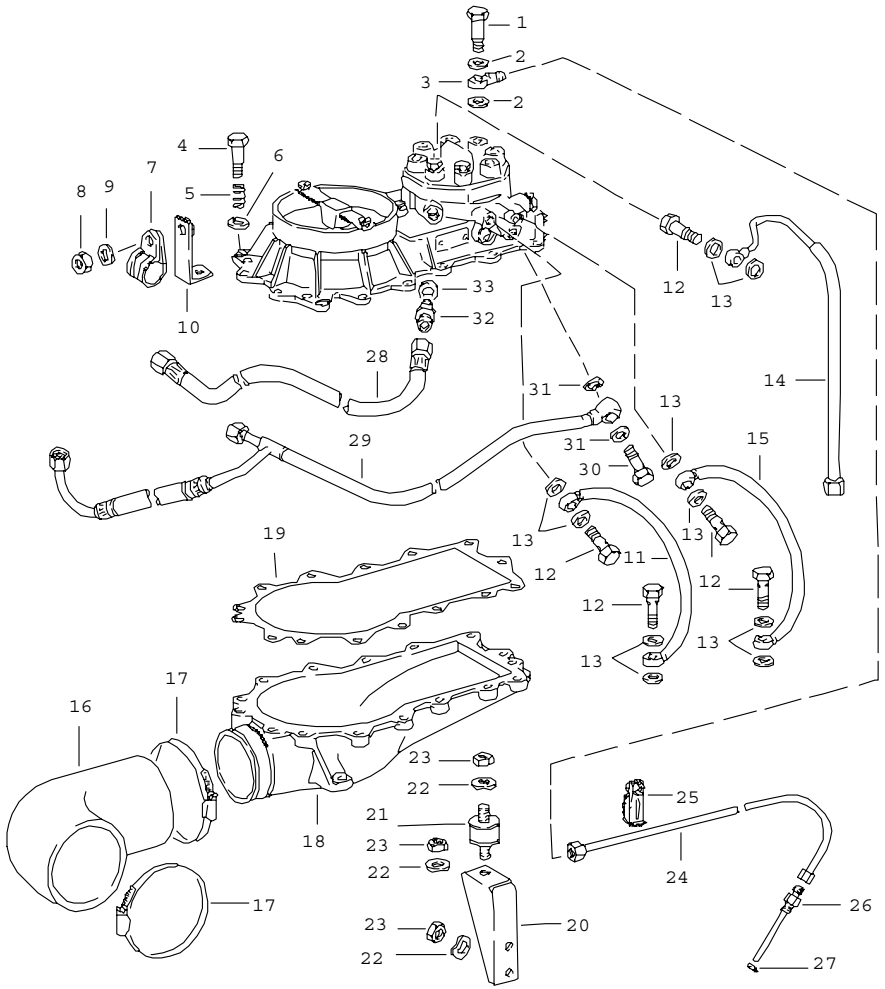

Pos	Part Number	Name	Remarks	Qty	Model
		k-jetronic III			TURBO
1	930 110 547 00	banjo bolt		6	
2	* 900 123 144 30	sealing ring A 10 X 13,5		12	
3	999 215 002 02	ring piece		6	
4	A 900 067 011 02	pan-head screw		4	
4	900 067 011 02	pan-head screw M 6 X 20		4	
4	900 067 089 02	pan-head screw M 6 X 25		10	
4	900 075 341 02	screw M 6 X 25		1	
5	911 110 364 00	compression spring		11	
6	N 012 226 5	spring washer B 6		15	
7	999 511 085 02	clamp		1	
8	900 075 057 02	hexagon-head bolt M 6 X 16		1	
9	N 012 226 5	spring washer B 6		1	
10	930 110 434 01	clip		1	
11	930 110 303 01	fuel line intake start valve		1	
12	911 110 899 00	banjo bolt		5	
13	* 900 123 115 30	sealing ring A 8 X 11,5		10	
14	930 110 302 01	fuel line intake warm-up valve		1	
15	930 110 305 02	fuel line return warm-up valve		1	
16	930 110 137 02	hose elbow		1	
17	999 512 350 02	hose clamp		2	
18	A 930 110 035 04	lower part		1	

Pos	Part Number	Name	Remarks	Qty	Model
18	930 110 035 04	lower part		1	
-	999 062 022 02	stud M 8 X 12		2	
19	* 930 110 394 00	gasket		1	
20	930 110 133 00	retaining bracket		1	
21	930 110 194 00	bonded rubber buffer		3	
22	N 012 241 8	spring washer B 8		7	
23	900 076 025 02	hexagon nut M 8		7	
24	930 110 041 02	injection line cylinder 1		1	
24	930 110 042 02	injection line cylinder 2		1	
24	930 110 043 02	injection line cyl. 3		1	
24	930 110 044 01	injection line cyl. 4		1	
24	930 110 045 02	injection line cylinder 5		1	
24	930 110 046 02	injection line cyl. 6		1	
25	A 930 110 606 01	clip		1	
25	930 110 432 02	clip for 2 lines		1	
25	A 930 110 607 01	clip		3	
25	930 110 432 03	clip for 3 lines		3	
26	930 110 225 02	injector valve		6	
27	* 900 123 144 30	sealing ring A 10 X 13,5		6	
28	930 110 301 04	fuel line intake	-80	1	
28	930 110 301 05	fuel line intake	81-	1	
29	A 930 110 304 03	fuel line return	-79	1	
29	930 110 304 03	fuel line return		1	
30	A 900 175 020 02	banjo bolt		1	
30	N 021 071 2	banjo bolt		1	
31	* 900 123 101 30	sealing ring A 12 X 18		2	
32	A N 020 704 2	connection piece		1	
32	N 020 704 2	connection piece		1	
33	* 900 123 116 30	sealing ring A 12 X 15,5		1	

- -- E N D -- -

Model	Year	MG	SG	Illustration	Restrictions	Update			
911	83	1	07	107-40		203	10:55	18.08.2006	PORSCHE PET PORSCHE

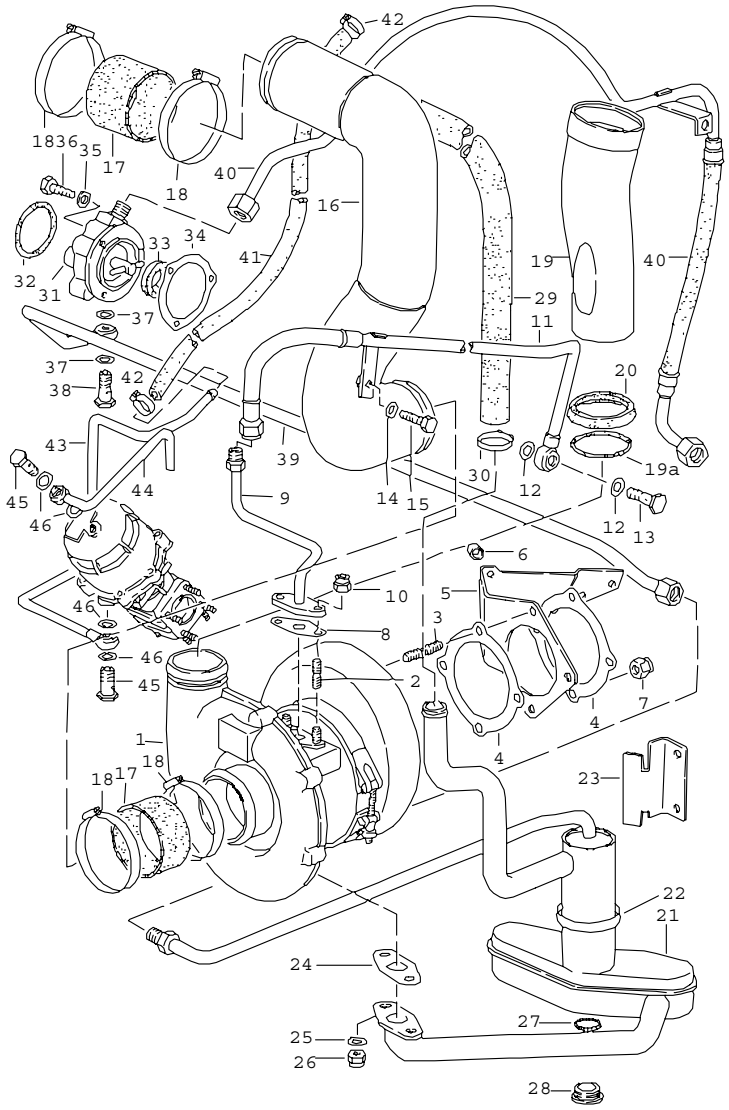

Pos	Part Number	Name	Remarks	Qty	Model
		turbocharging			TURBO
1	> 930 123 003 01	turbocharger		1	
2	900 081 004 02	stud M 8 X 20		4	
3	900 081 051 02	stud M 10 X 35		4	
4	* 930 123 191 01	gasket		2	
5	930 123 121 02	bracket		1	
6	930 123 123 00	spacer tube		1	
7	900 910 099 02	lock nut M 10		4	
8	* 930 107 123 01	gasket		1	
9	930 107 124 01	oil pipe		1	
10	A 999 084 052 02	lock nut		2	
10	999 084 052 02	lock nut M 8		2	
11	930 107 125 03	oil pipe		1	
12	A 900 123 007 30	sealing ring		2	
12	900 123 007 30	sealing ring A 14 X 18		2	
13	930 107 706 00	banjo bolt		1	
14	N 012 226 5	spring washer B 6		1	
15	999 072 005 09	hexagon-head bolt M 6 X 12		1	
16	930 110 165 02	intake pipe		1	
17	930 110 158 01	rubber sleeve		2	
18	A 999 512 250 02	clamp		4	
18	999 512 351 02	hose clamp		4	
19	930 110 192 01	pressure line		1	
19A	* 999 701 473 40	round seal		1	
20	* 930 110 230 00	sealing ring		1	
21	930 107 001 07	oil collection container		1	

Pos	Part Number	Name	Remarks	Qty	Model
21	930 107 004 01	oil collection container		1	
22	999 512 341 02	clip		2	
23	930 107 113 01	retaining bracket		1	
24	* 930 107 116 01	gasket		1	
25	N 012 241 8	spring washer B 8		2	
26	999 084 052 02	lock nut M 8		2	
27	* 900 123 055 30	sealing ring A 12 X 17		1	
28	900 219 006 02	screw plug M 12 X 1,5		1	
29	930 107 394 02	connecting hose		1	
30	999 512 252 02	hose clamp		2	
31	964 107 005 21	oil pump		1	
32	* 999 707 289 40	round seal 47 X 2		1	
33	* 999 113 246 40	radial sealing ring		1	
34	* 930 105 197 05	gasket		1	
35	N 012 226 5	spring washer B 6		3	
-	900 076 010 02	hexagon nut M 6		3	
37	* 900 123 018 30	sealing ring A 16 X 20		2	
38	900 175 005 02	banjo bolt		1	
39	930 107 338 00	oil pipe		1	
40	930 107 336 03	oil pipe		1	
-	999 239 006 40	hose 8 X 14		*	
41	-	380 MM		1	
42	999 512 160 02	hose clamp		2	
43	930 123 115 01	control line I		1	
44	930 123 117 01	vent line		1	
45	A 900 175 020 02	banjo bolt		2	
45	N 021 071 2	banjo bolt		2	
46	* 900 123 116 30	sealing ring A 12 X 15,5		4	

- -- E N D -- -

Model	Year	MG	SG	Illustration	Restrictions	Update			
911	83	1	07	107-45		203	10:55	18.08.2006	PORSCHE PET PORSCHE

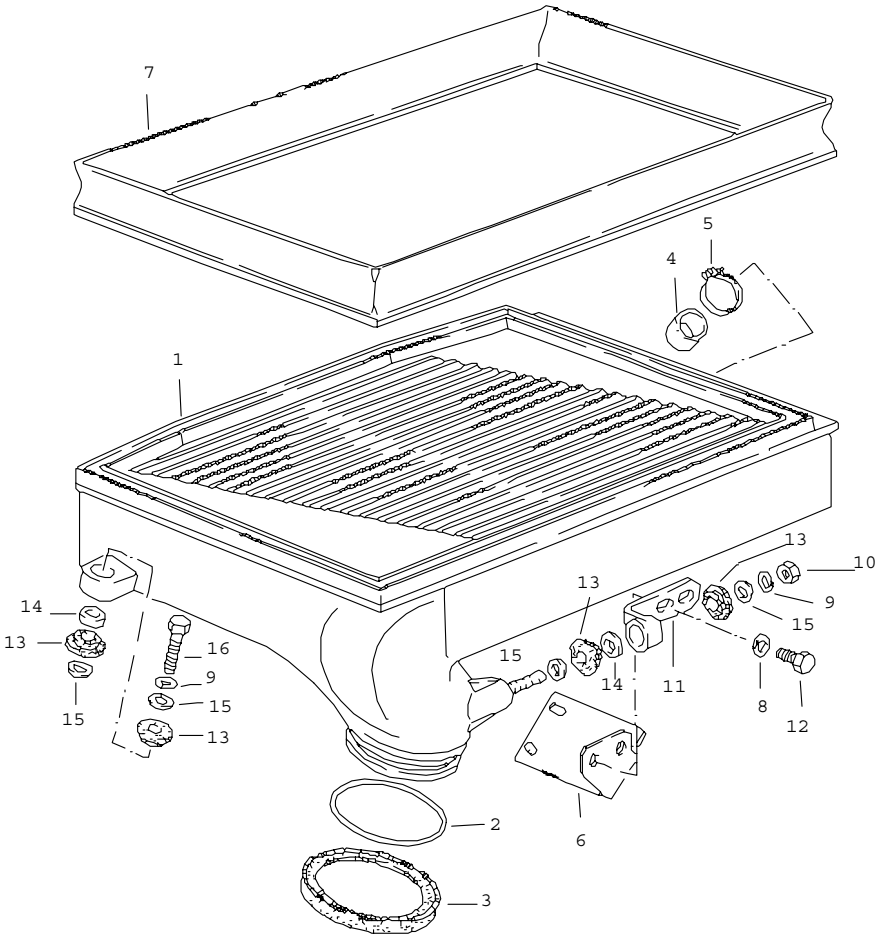

Pos	Part Number	Name	Remarks	Qty	Model
		charge air cooler			TURBO
1	A 930 110 233 03	charge air cooler		1	
1	930 110 233 07	charge air cooler		1	
2	* 999 701 469 40	round seal		3	
3	* 930 110 379 00	sealing ring		1	
6	930 110 224 01	mounting plate		1	
7	930 110 285 01	gasket		1	
8	900 025 007 02	washer B 8,4		4	
9	N 012 241 8	spring washer B 8		7	
10	900 076 025 02	hexagon nut M 8		3	
11	930 110 223 02	support		1	
12	A 900 075 087 02	hexagon-head bolt		2	
12	900 075 087 02	hexagon-head bolt M 8 X 16		2	
13	930 113 430 00	rubber mounting		6	
14	930 110 232 00	spacer sleeve		3	
15	900 151 008 02	washer 8,4		6	
16	900 074 134 02	hexagon-head bolt M 8 X 45		2	
		- -- E N D -- -			

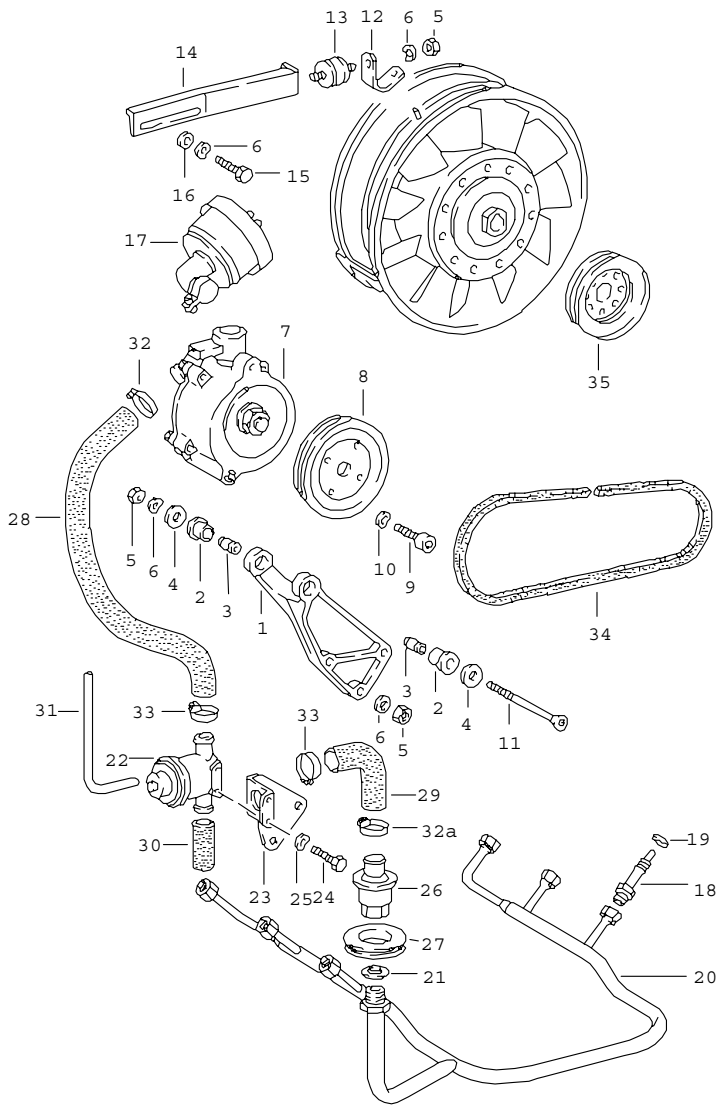

Pos	Part Number	Name	Remarks	Qty	Model
		air injection			911 SC
1	911 113 113 02	bracket		1	
2	911 113 121 00	rubber mounting		2	
3	911 113 122 00	spacer sleeve		2	
4	900 151 008 02	washer B 8,4		1	
(4)	911 113 162 00	washer		1	
5	900 076 025 02	hexagon nut M 8		6	
6	N 012 241 8	spring washer B 8		6	
7	A 911 113 111 03	air pump		1	
7	911 113 111 03	air pump		1	
8	911 113 158 01	pulley		1	
9	900 067 008 02	pan-head screw M 6 X 12		4	
10	N 012 226 5	spring washer		4	
11	900 249 006 02	countersunk-head screw M 8 X 120		1	
12	911 113 126 02	retaining bracket		1	
13	930 110 194 00	bonded rubber buffer		2	
14	911 113 125 02	support		1	
15	900 075 085 02	hexagon-head bolt M 8 X 20		1	
16	900 025 007 02	washer 8,4		1	
17	911 113 117 02	air cleaner		1	
-	930 113 401 00	filter cartridge		1	
18	911 113 145 02	union		6	
19	* 900 123 033 20	sealing ring A 10 X 13,5 CU		6	
20	911 113 043 01	air tube		1	
21	* 900 123 060 30	sealing ring A 24 X 29		1	

Pos	Part Number	Name	Remarks	Qty	Model	Pos	Part Number	Name	Remarks	Qty	Model
22	A 930 113 147 01	diverter valve	-80	1				- -- E N D -- -			
22	930 113 147 01	diverter valve		1							
23	930 113 146 01	support for diverter valve		1							
24	999 072 005 09	hexagon-head bolt M 6 X 12		2							
25	N 012 226 5	spring washer B 6		2							
26	A 911 113 115 01	check valve	-81	1							
26	911 113 115 01	check valve		1							
27	* 911 113 146 00	gasket		1							
28	930 113 138 02	hose air pump diverter valve together with 911.113.111.02		1							
28	930 113 138 03	hose diverter valve together with 911.113.111.03		1							
29	930 113 137 01	hose diverter valve check valve		1							
30	930 113 139 02	hose diverter valve engine cover rear		1							
-	999 239 003 40	hose 3,2 X 7		*							
31	-	750 MM		1							
32	999 512 038 02	hose clamp S 27/9		1							
32A	999 512 237 02	hose clamp S 26/9		1							
33	999 512 296 02	hose clamp S 25/7		2							
34	900 192 021 50	narrow v-belt 9,5 X 950		1							
35	911 106 208 00	pulley		1							

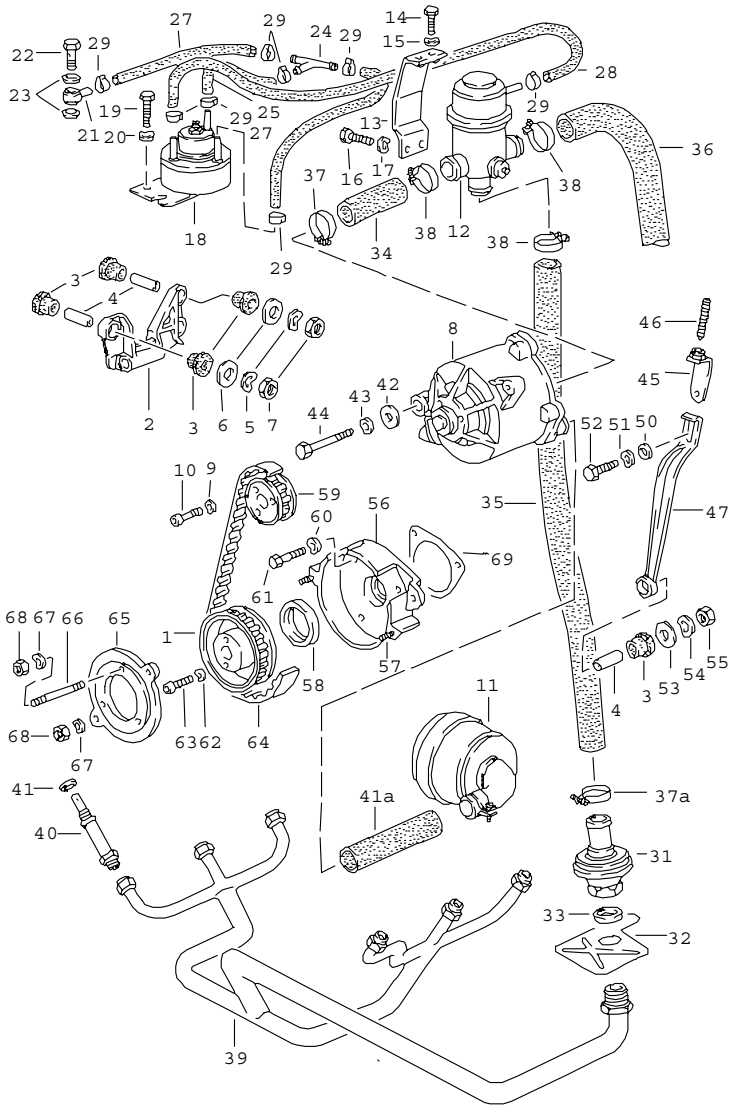

Pos	Part Number	Name	Remarks	Qty	Model
		air injection			TURBO
1	930 113 025 01	pulley		1	
2	930 113 159 02	bracket		1	
-	900 025 007 02	washer 8,4		1	
3	930 113 161 00	rubber mounting		8	
4	930 113 163 00	spacer sleeve		4	
5	N 012 241 8	spring washer B 8		3	
6	900 151 008 02	washer B 8,4		3	
7	900 076 025 02	hexagon nut M 8		3	
8	930 113 114 01	air pump		1	
9	N 012 226 5	spring washer A 6		3	
10	900 067 089 02	pan-head screw M 6 X 25		3	
11	930 113 120 01	air cleaner		1	
-	930 113 401 00	filter cartridge		1	
12	930 113 127 00	diverter valve		1	
13	930 113 112 00	retaining bracket		1	
14	N 010 217 9	hexagon-head bolt M 6 X 20		2	
15	N 012 226 5	spring washer B 6		2	
16	900 075 014 02	hexagon-head bolt M 6 X 18		2	
17	N 012 226 5	spring washer B 6		2	
18	930 113 126 02	control valve		1	
19	999 072 005 09	hexagon-head bolt M 6 X 12		2	
20	N 012 226 5	spring washer B 6		2	

Pos	Part Number	Name	Remarks	Qty	Model
21	911 110 382 00	ring piece		1	
22	N 023 053 2	banjo bolt		1	
23	* 900 123 033 20	sealing ring A 10 X 13,5 CU		2	
-	999 239 014 40	hose 3,5 X 8,5		*	
-	-	320 MM		1	(J)
-	-	220 MM		1	
-	-	90 MM		1	
29	311 133 343 A	hose clamp		8	
31	A 911 113 115 01	check valve	-81	1	
31	911 113 115 01	check valve		1	
32	A 930 113 135 01	cover plate	80-	1	(J)
32	930 113 135 01	cover plate	80-	1	(J)
33	* 900 123 060 30	sealing ring A 24 X 29		2	
34	930 113 118 01	hose		1	
35	930 113 181 00	hose		1	
36	930 113 182 00	hose		1	
37	999 512 038 02	hose clamp S 28/9 ZY		1	
37A	999 512 237 02	hose clamp S 26/9		1	
38	N 024 162 1	hose clamp S 25/9 ZY		3	
39	930 113 043 02	air tube		1	
40	911 113 145 02	union		6	
41	* 900 123 033 20	sealing ring A 10 X 13,5 CU		6	
41A	999 239 004 40	breather hose 22 X 31 X 80		1	
42	900 025 007 02	washer B 8,4		2	
43	N 012 241 8	spring washer B 8		1	
44	N 010 391 4	hexagon-head bolt M 8 X 100		1	
45	930 113 187 01	bracket		1	
46	900 068 004 02	threaded pin M 8 X 45		1	
47	930 113 171 00	support		1	
50	900 025 007 02	washer B 8,4		1	
51	N 012 241 8	spring washer		1	
52	900 075 099 02	hexagon-head bolt M 8 X 30		1	
53	900 151 008 02	washer B 8,4		1	
54	N 012 241 8	spring washer B 8		1	
55	900 076 025 02	hexagon nut M 8		1	
56	A 930 113 031 04	intermediate flange	-79	1	
56	930 113 031 04	intermediate flange		1	
57	999 062 055 02	stud BM 6 X 12		2	
57	999 062 009 02	stud BM 8 X 28		1	
58	* 999 113 464 40	shaft seal		1	
59	930 113 017 05	gear wheel II		1	
60	N 012 226 5	spring washer B 6		3	
61	900 075 057 02	hexagon-head bolt M 6 X 16		2	
62	N 012 226 5	spring washer A 6		2	
63	900 067 013 02	pan-head screw M 6 X 35		2	

Pos	Part Number	Name	Remarks	Qty	Model
64	999 192 131 50	toothed belt 70 teeth		1	
65	930 113 033 02	cover		1	
66	999 062 123 02	stud BM 6 X 45		3	
67	N 012 226 5	spring washer B 6		5	
68	900 076 010 02	hexagon nut M 6		5	
69	* 930 105 197 03	gasket		1	
		- -- E N D -- -			

Model	Year	MG	SG	Illustration	Restrictions	Update	10:56	18.08.2006	PORSCHE PET PORSCHE
911	83	1	08	108-10		203			

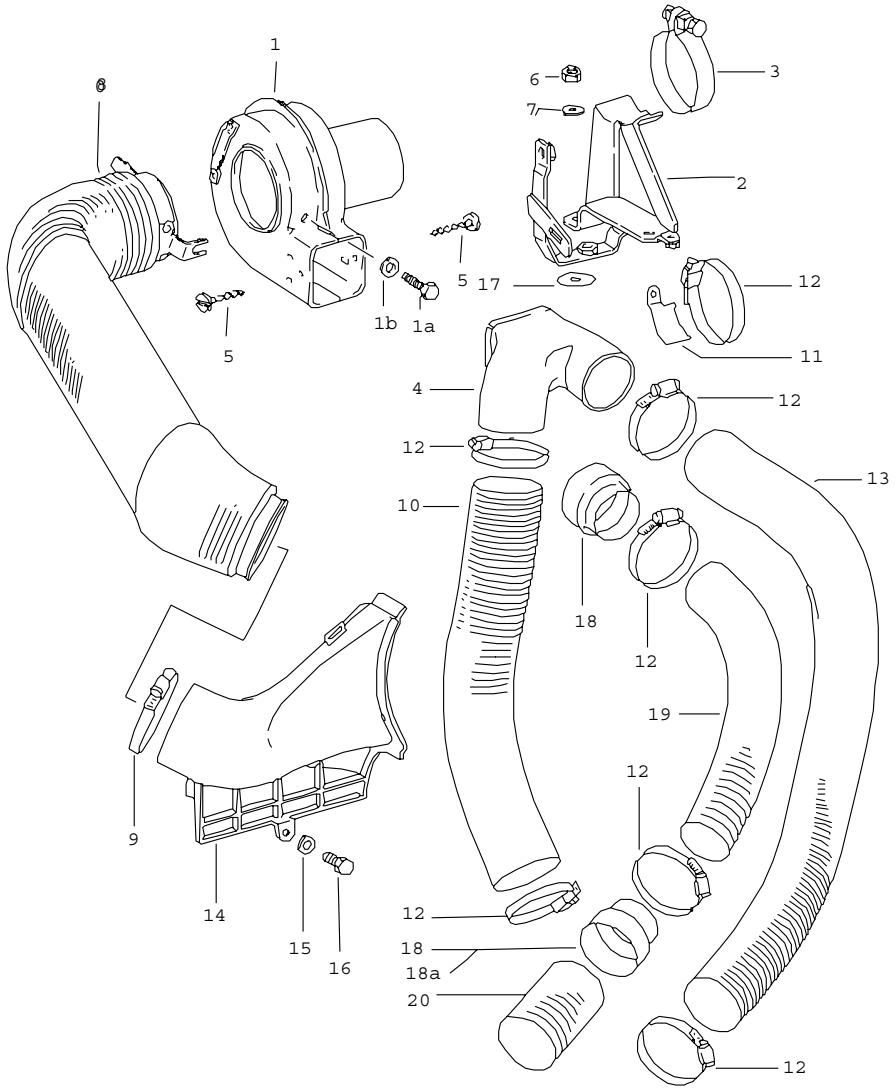

Pos	Part Number	Name	Remarks	Qty	Model
		blower engine			911 SC
1	A 911 624 151 02	blower		1	
1	911 624 151 03	blower		1	
1A	N 010 210 13	hexagon-head bolt M 6 X 10	80-	1	
1B	N 011 524 7	washer 6,4	80-	1	
2	911 211 139 02	support	-79	1	
2	911 211 139 02	support		1	
-	999 513 003 40	tie-wrap		1	
-	999 511 076 02	clamp for line carbon canister		1	
3	999 512 244 02	clip SP 77/20		1	
4	911 211 135 02	distributing piece		1	
5	900 143 049 07	tapping screw BZ 3,5 X 9,5		2	
6	900 084 004 02	hexagon nut M 8		2	
7	900 025 007 02	washer 8,4		2	
-	999 511 069 02	clamp 12/15 return warm-up valve		1	
-	900 075 057 02	hexagon-head bolt M 6 X 16		1	
-	999 072 005 09	hexagon-head bolt M 6 X 12		2	
-	N 012 226 5	spring washer B 6		3	
-	999 511 081 02	clip 1100 2 X 8/15 mount injection line cyl. 2 and 3		1	

Pos	Part Number	Name	Remarks	Qty	Model
-	999 511 081 02	clip 1100 2 X 11/15 mount injection line cylinder 1 mixture control unit warm-up valve		1	
(8)	911 211 272 02	hose M >> 640 1795 M >> 630 8249 M >> 630 2599 M >> 630 9039		1	
8	930 211 031 00	hose M 640 1796 >> M 630 8250 >> M 630 2600 >> M 630 9040 >>	80-	1	
9	930 211 329 03	hose clamp 76-92 X 9		2	
10	901 211 195 00	breather hose	/L	1	
11	911 211 277 00	support		2	
11	911 211 277 02	support		1	M 399 M 559
11	911 211 277 03	support		1	
12	A 999 512 349 02	hose clamp 51-72 X 9	-81	6	
12	999 512 349 02	hose clamp SGT 50-70/9		6	
12	A 999 512 348 02	hose clamp 40-60	-81	6	M 399 M 559
12	999 512 348 02	hose clamp SGT 40-60/9		6	M 398 M 559
13	911 211 522 00	heater hose	/R	1	
14	930 106 326 01	hot air socket		1	
15	999 025 108 02	washer		2	
16	999 072 005 09	hexagon-head bolt M 6 X 12		2	
17	911 211 401 00	rubber washer		2	M 399 M 559
18	911 211 275 01	reducing socket		2	M 399 M 559
18A	911 211 275 01	reducing socket		1	M 559
19	911 211 274 00	heater hose 50 $		1	M 399 M 559
20	911 211 273 00	heater hose 60 $		1	M 399 M 559

- -- E N D -- -

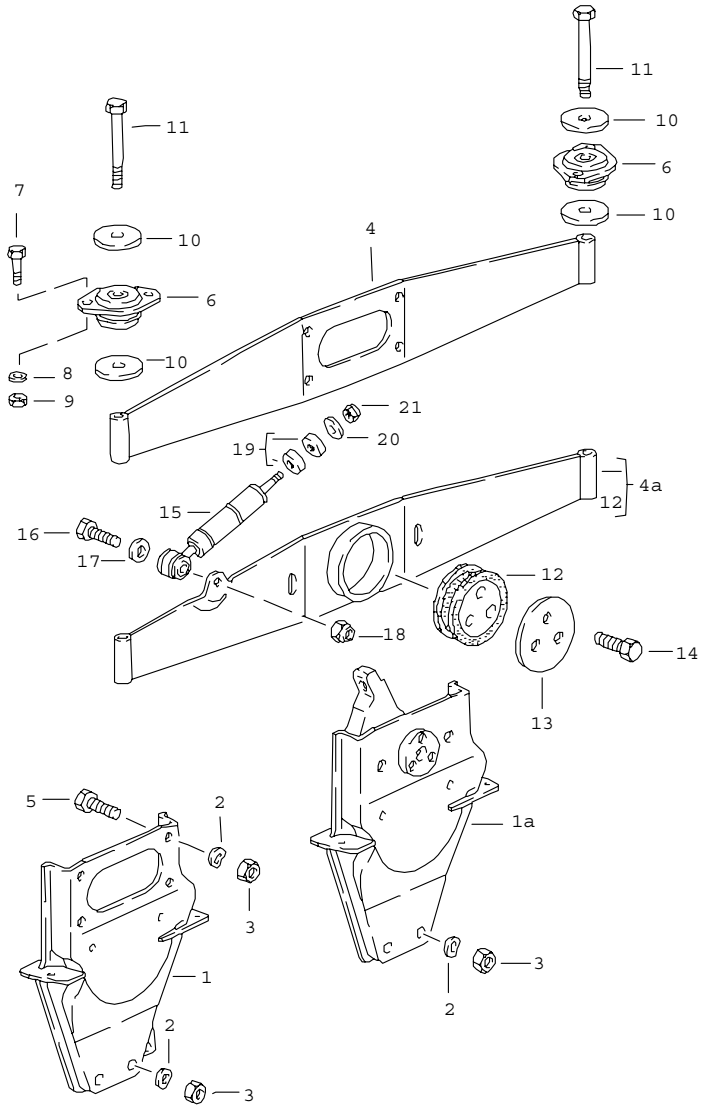

Pos	Part Number	Name	Remarks	Qty	Model
		engine suspension			
1	911 115 014 03	bracket		1	SC
1	930 115 014 00	bracket		1	TURBO
1	911 115 014 03	bracket		1	SC M559
1A	911 115 014 04	bracket		1	CABRIO
2	N 012 242 3	spring washer		8	
3	900 157 002 02	hexagon nut M 10		8	
4	930 375 011 01	bracket		1	
4A	911 375 011 06	bracket		1	CABRIO
5	900 156 006 02	hexagon-head bolt M 10 X 18		4	
6	911 375 043 00	bearing		2	
6	A 911 375 043 07	bearing		2	CABRIO
6	911 375 043 07	bearing		2	CABRIO
7	A N 010 335 5	hexagon-head bolt		4	
7	N 010 335 5	hexagon-head bolt M 8 X 35		4	
8	A 900 027 015 02	lock ring		4	
8	900 027 015 02	lock ring B 8		4	
9	900 076 025 02	hexagon nut M 8		4	
10	901 305 311 00	seat		4	
11	N 010 191 2	hexagon-head bolt M 12 X 1,5 X 95		2	
12	911 375 043 05	torsion bearing		1	CABRIO
13	911 375 313 00	end plate		1	CABRIO
14	N 010 275 3	hexagon-head bolt M 10X35		3	CABRIO
15	911 375 175 00	vibration damper		1	CABRIO
16	N 010 445 2	hexagon-head bolt M 10X45		1	CABRIO

Pos	Part Number	Name	Remarks	Qty	Model
17	900 025 008 09	washer A 10,5		1	CABRIO
18	A N 900 876 01	lock nut		1	CABRIO
18	N 900 876 01	lock nut VM 10		1	CABRIO
19	911 375 181 00	spacer ring		2	CABRIO
20	N 900 662 01	washer 6,4 X 21,5		1	CABRIO
21	900 910 010 09	lock nut VM 6		1	CABRIO
		- -- E N D -- -			

Model	Year	MG	SG	Illustration	Restrictions	Update		
911	83	1	98	198-00		203	10:56	18.08.2006

Pos	Part Number	Name	Remarks	Qty	Model
		set of seals repair kits			
>>	> 930 100 907 03	set of seals cylinder cylinder head comprising:		1	SC
-	999 704 172 50	sealing ring		2	
-	930 104 194 02	gasket		6	
-	930 104 317 00	ce-seal ring		6	
-	928 104 193 12	valve stem seal		12	
-	930 105 193 00	gasket		2	
-	900 031 014 30	washer 8,4		40	
-	999 701 598 40	o-ring 8,3 - 2,4		2	
-	999 701 596 40	o-ring 20,3 - 2,4		2	
-	999 701 298 40	o-ring 10 - 1,3		2	
-	N 013 804 2	sealing ring A 6 X 10		2	
-	930 105 197 05	gasket		3	
-	N 013 804 2	sealing ring 67,5 X 4		1	
-	930 105 191 03	gasket		1	
-	930 105 192 01	gasket		1	
-	900 031 011 30	washer 6,4		19	
-	930 105 194 01	gasket		2	
-	930 105 195 05	gasket		2	
-	999 704 173 50	sealing ring		1	
-	900 123 116 30	sealing ring A 12 X 16		7	
-	999 707 112 40	round seal		8	
-	930 110 197 12	gasket		6	
-	911 110 394 02	gasket		1	

Model	Year	MG	SG	Illustration	Restrictions	Update		
911	83	1	98	198-00		203	10:56	18.08.2006

Pos	Part Number	Name	Remarks	Qty	Model
-	999 701 423 40	o-ring 6 X 5		6	
-	900 123 115 30	sealing ring A 8 X 11,5		17	
-	900 123 144 30	sealing ring 10 X 13,5		1	
-	999 701 395 50	o-ring 7 - 2 B		1	
-	999 701 210 40	o-ring 20 - 2,5		1	
-	911 111 191 01	gasket		1	
-	930 111 192 01	gasket		2	
-	930 111 193 01	gasket		1	
-	911 111 188 02	support washer		1	
-	911 111 189 03	gasket		1	
-	900 123 033 20	sealing ring A 10 X 13,5		6	
-	900 123 060 30	sealing ring A 24 X 29		1	
-	905 107 191 02	gasket		1	
-	900 123 008 30	sealing ring A 14 X 20		1	
-	900 123 116 30	sealing ring A 12 X 15,5		3	
-	999 701 135 50	o-ring 15 X 2,5		1	
-	900 123 101 30	sealing ring A 14 X 18		2	
-	930 111 191 01	gasket		6	
-	900 123 007 70	sealing ring A 14 X 18		2	
-	999 701 468 40	round seal		2	
-	911 113 146 00	gasket		1	
-	911 113 179 02	gasket		2	
-	911 113 205 02	sealing rubber		1	
-	999 701 446 40	o-ring		6	
-	900 123 007 30	sealing ring		1	

Model	Year	MG	SG	Illustration	Restrictions	Update		
911	83	1	98	198-00		203	10:56	18.08.2006

Pos	Part Number	Name	Remarks	Qty	Model
-	900 123 005 00	sealing ring A 12 X 16		8	
>>	> 930 100 908 02	set of seals cylinder cylinder head comprising:		1	TURBO
-	999 704 172 50	sealing ring		6	
-	930 104 194 02	gasket		6	
-	928 104 193 12	valve stem seal		12	
-	930 105 193 00	gasket		2	
-	999 701 598 40	o-ring 8,3 - 2,4		2	
-	999 701 596 40	o-ring 20,3 - 2,4		2	
-	999 701 298 40	o-ring 10 - 1,3		2	
-	N 013 804 2	sealing ring A 6 X 10		2	
-	930 105 197 03	gasket		3	
-	930 105 191 03	gasket		1	
-	930 105 192 01	gasket		1	
-	900 031 011 30	washer 6,4		19	
-	930 105 194 01	gasket		2	
-	930 105 195 05	gasket		2	
-	900 031 014 30	washer 8,4		42	
-	999 704 173 50	sealing ring		1	
-	900 123 116 30	sealing ring A 12 X 16		7	
-	999 707 112 40	round seal		8	
-	999 707 289 40	round seal 47 X 2		1	
-	900 123 007 30	sealing ring A 14 X 18		2	
-	999 113 246 40	radial sealing ring		1	
-	900 123 055 30	sealing ring A 12 X 17		1	

Model	Year	MG	SG	Illustration	Restrictions	Update		
911	83	1	98	198-00		203	10:56	18.08.2006

Pos	Part Number	Name	Remarks	Qty	Model
-	930 107 116 01	gasket		1	
-	900 123 018 30	sealing ring A 16 X 20		2	
-	930 107 123 01	gasket		1	
-	900 123 033 20	sealing ring A 10 X 13,5		26	
-	930 110 197 10	gasket		12	
-	930 110 149 00	gasket		2	
-	930 110 122 00	sealing ring		1	
-	900 123 101 30	sealing ring A 12 X 18		2	
-	900 123 033 20	sealing ring A 10 X 13,5		1	
-	930 110 394 00	gasket		1	
-	900 123 115 30	sealing ring A 8 X 11,5		10	
-	999 701 395 50	o-ring 7 - 2		1	
-	930 111 192 01	gasket		2	
-	999 701 468 40	round seal		3	
-	930 110 230 00	sealing ring		1	
-	930 110 379 00	sealing ring		1	
-	930 111 160 01	gasket		2	
-	930 111 162 01	gasket		2	
-	911 111 189 03	gasket		1	
-	930 111 191 01	gasket		6	
-	930 111 193 01	gasket		1	
-	930 123 191 01	gasket		2	
-	999 701 473 40	round seal		1	
-	930 123 192 01	gasket		1	
-	930 123 194 01	gasket		2	
-	999 701 469 40	round seal		3	
-	999 701 477 40	round seal		1	
-	911 113 179 02	gasket		1	

Model	Year	MG	SG	Illustration	Restrictions	Update		
911	83	1	98	198-00		203	10:56	18.08.2006

Pos	Part Number	Name	Remarks	Qty	Model
-	911 113 190 01	gasket		6	
-	900 123 106 30	sealing ring		1	
-	900 123 116 30	sealing ring		4	
-	900 123 060 30	sealing ring		2	
-	930 123 134 04	gasket		1	
-	999 113 464 40	shaft seal		1	
-	900 123 005 00	sealing ring A 12 X 16		8	
-	930 111 156 01	support washer		1	
-	930 123 132 02	support washer		1	
>>	> 930 100 901 04	set of seals crankcase comprising:		1	
-	999 704 172 50	sealing ring		3	
-	999 701 006 40	o-ring		26	
-	999 113 264 40	radial sealing ring 90 X 110 X 12		1	
-	930 101 391 01	gasket		2	
-	900 123 118 30	sealing ring A 22 X 27		1	
-	999 113 290 41	sealing ring 30 X 50 X 10		1	
-	999 707 285 40	o-ring 51 X 4,5		1	
-	900 123 140 30	sealing ring A 18 X 22		1	
-	900 123 066 30	sealing ring A 10 X 16		8	
-	900 031 011 30	washer 6,4		3	
-	900 123 005 00	sealing ring A 12 X 16		4	
-	900 031 014 30	washer 8,4		24	
-	930 105 198 01	gasket		1	
-	999 704 173 50	sealing ring		1	

Model	Year	MG	SG	Illustration	Restrictions	Update		
911	83	1	98	198-00		203	10:56	18.08.2006

Pos	Part Number	Name	Remarks	Qty	Model
-	900 123 011 30	sealing ring A 22 X 27		1	
-	999 701 053 40	o-ring 39,2 X 3		1	
-	900 123 106 30	sealing ring A 18 X 24		2	
-	930 107 791 00	gasket		1	
-	911 602 102 01	sealing ring		1	
-	900 123 009 20	sealing ring A 18 X 24		1	
-	900 123 007 30	sealing ring A 14 X 18		2	
-	901 102 191 00	sealing ring		1	
>>	> 911 105 901 01	repair kit for chain adjuster 930.105.049.00 see group 1/03/10 - 1/03/15 comprising: intermediate piece o-ring OR 10 - 1 insert for ball valve ball 5 MM compression spring spring guide snap ring B 16 o-ring CR 8,3 - 2,4 o-ring CR 20,3 - 2,4 compression spring snap ring B 28 gasket A 6 X 10 set of piston rings - mahle -		1 1 1 1 1 1 1 1 1 1 1 1 1 1 	
-	930 103 963 00	set of piston rings	-79	6	SC
-	930 103 986 00	set of piston rings	80-	6	SC
-	930 103 968 00	set of piston rings		6	TURBO

Model	Year	MG	SG	Illustration	Restrictions	Update		
911	83	1	98	198-00		203	10:56	18.08.2006

Pos	Part Number	Name	Remarks	Qty	Model
		set of piston rings - SCHMIDT -			
-	930 103 967 00	set of piston rings	-79	6	SC
-	930 103 985 00	set of piston rings	80-	6	SC
>>	> 911 100 956 03	maintenance set for periodic maintenance comprising:	-80	1	SC
-	930 107 764 01	oil filter		1	
-	930 105 194 01	gasket		2	
-	930 105 195 05	gasket		2	
-	900 031 014 30	washer		34	
-	911 110 185 02	filter element		1	
-	930 113 401 00	filter cartridge		1	
-	900 123 011 20	sealing ring		2	
-	900 084 004 02	hexagon nut		34	
-	930 110 076 00	fuel filter		1	
-	999 513 003 40	tie-wrap		1	
-	999 170 170 90	spark plug		6	
>>	> 911 100 956 04	maintenance set for periodic maintenance comprising:	81-	1	SC
-	930 107 764 01	oil filter		1	
-	928 110 147 05	fuel filter		1	
-	930 105 194 01	gasket		2	
-	930 105 195 05	gasket		2	
-	900 031 014 30	washer		34	
-	911 110 185 02	filter element		1	
-	930 113 401 00	filter cartridge		1	
-	900 123 011 20	sealing ring		2	
-	900 084 004 02	hexagon nut		34	
-	999 513 003 40	tie-wrap		1	
-	999 170 165 90	spark plug		6	

Model	Year	MG	SG	Illustration	Restrictions	Update		
911	83	1	98	198-00		203	10:56	18.08.2006

Pos	Part Number	Name	Remarks	Qty	Model
>>	> 911 100 988 00	maintenance set for periodic maintenance comprising:	-80	1	TURBO
-	930 107 764 01	oil filter		1	
-	930 110 139 00	fuel filter		1	
-	930 105 194 01	gasket		2	
-	930 105 195 05	gasket		2	
-	900 084 004 02	hexagon nut		34	
-	900 031 014 30	washer		34	
-	930 110 185 02	air cleaner cartridge		1	
-	930 113 401 00	filter cartridge		1	
-	900 123 118 30	sealing ring		2	
-	900 123 055 30	sealing ring		1	
-	999 170 128 90	spark plug		6	
>>	> 930 105 911 00	chain adjuster 1 set for subsequent installat. comprising:	/L -83	1	
-	930 105 063 08	cover		1	
-	N 016 155 3	screw plug M 14 X 1,5		1	
-	900 123 007 30	sealing ring A 14 X 18		1	
-	930 107 347 03	oil hose		1	
-	930 107 347 02	oil pipe		1	
-	930 107 341 00	support		1	
-	900 119 059 02	pan-head screw M 4 X 10		1	
-	999 511 174 02	clip		1	
-	930 105 058 03	chain adjuster		1	
-	999 701 690 40	round seal 12 X 1,78		1	
-	N 021 073 1	banjo bolt LL 3 - 5		1	
-	900 123 115 30	sealing ring A 8 X 11,5		2	

Model	Year	MG	SG	Illustration	Restrictions	Update		
911	83	1	98	198-00		203	10:56	18.08.2006

Pos	Part Number	Name	Remarks	Qty	Model
-	900 104 003 02	union nut ALL 8		1	
-	N 020 825 1	cutting ring LL 8		1	
-	930 105 191 03	gasket		1	
-	900 031 011 30	washer 6,4		10	
-	900 910 012 02	lock nut M 6		10	
-	930 107 342 01	support		1	
-	900 119 059 02	pan-head screw M 4 X 10		1	
-	999 511 174 02	clip		1	
>>	> 930 105 912 01	chain adjuster 1 set for subsequent installat. comprising:	/R -83	1	M930.07/08 M930.16/17
-	930 105 064 10	cover		1	
-	930 107 348 11	oil hose		1	
-	930 107 348 09	oil pipe		1	
-	930 107 342 01	support		1	
-	900 119 059 02	pan-head screw M 4 X 10		1	
-	999 511 174 02	clip		1	
-	930 105 058 03	chain adjuster		1	
-	999 701 690 40	round seal 12 X 1,78		1	
-	N 021 073 1	banjo bolt LL 3 - 5		1	
-	900 123 115 30	sealing ring 8 X 11,5		2	
-	900 104 003 02	union nut ALL 8		1	
-	N 020 825 1	cutting ring LL 8		1	
-	930 105 192 01	gasket		1	
-	900 031 011 30	washer 6,4		11	

Model	Year	MG	SG	Illustration	Restrictions	Update		
911	83	1	98	198-00		203	10:56	18.08.2006

Pos	Part Number	Name	Remarks	Qty	Model
-	900 910 012 02	lock nut M 6		11	
		- -- E N D -- -			

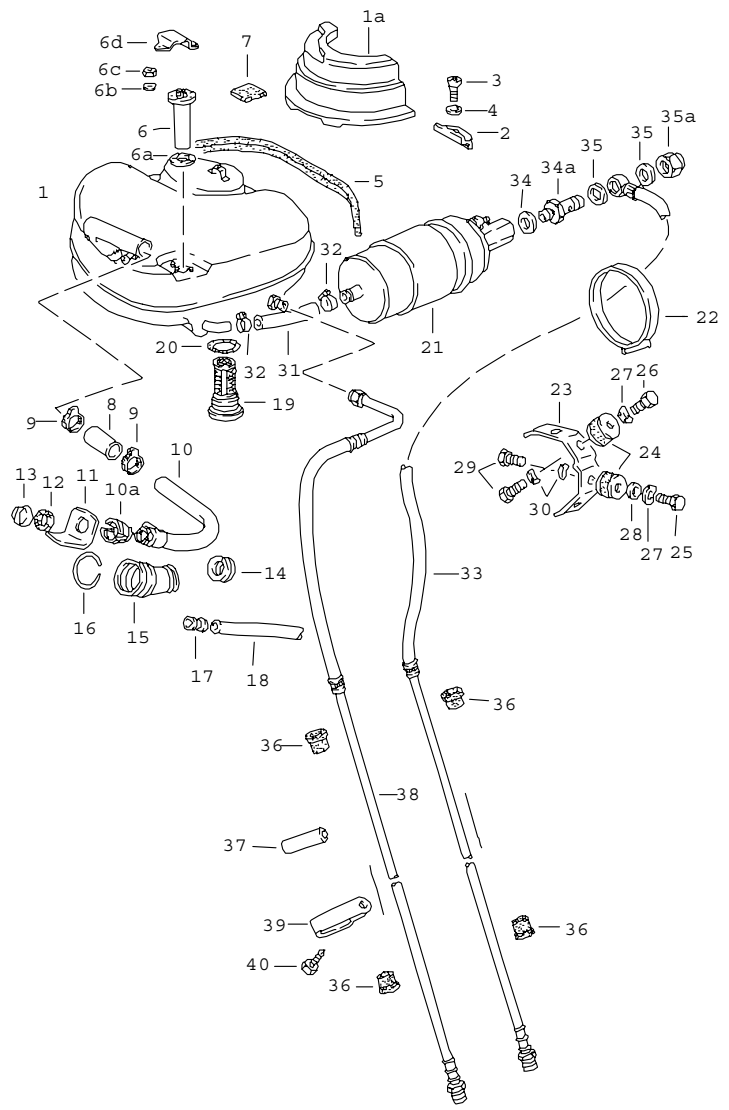

Pos	Part Number	Name	Remarks	Qty	Model
		fuel system front			
1	930 201 010 01	fuel tank	-79	1	
1	930 201 010 03	fuel tank F 930 9800803-	80- 79-	1	TURBO
1A	911 201 291 00	support for spare wheel		1	
2	901 201 311 00	bracket		3	
3	900 067 151 02	pan-head screw		3	
4	900 025 007 02	washer 8,4		3	
5	901 504 932 20	sealing strap		1	
6	901 741 801 00	sender		1	
6A A	477 919 133	sealing ring		1	
6A	477 919 133	sealing ring		1	
6B A	900 028 007 02	spring washer		5	
6B	N 012 222 4	spring washer B 5		5	
6C A	900 076 027 02	hexagon nut		5	
6C	N 011 005 14	hexagon nut M 5		5	
6D	901 201 275 30	cap		1	
7	911 201 259 00	desk pad		2	
(7)	911 201 259 01	desk pad		1	
8	911 201 515 00	hose		1	
9 A	999 512 348 02	hose clamp		2	
9	999 512 348 02	hose clamp		2	
10	911 201 049 02	filler neck	-79	1	
10	911 201 049 03	filler neck	-79	1	SC(USA)(CDN)
10	911 201 049 04	filler neck F 930 9800803-	80- 79-	1	TURBO
10	911 201 049 05	filler neck	80-	1	SC(USA)(CDN)
-	911 201 517 00	safety device/filler sock.	-79	1	SC (J)

Pos	Part Number	Name	Remarks	Qty	Model
-	A N 011 524 7	washer	-79	2	
-	N 011 524 7	washer 6,4	-79	2	
-	A N 012 006 4	lock ring	80-	2	
-	N 012 006 4	lock ring	80-	2	
-	A 900 910 012 02	lock nut	-79	2	
-	999 084 074 02	lock nut M 6	-79	2	
-	900 075 310 02	hexagon-head bolt M 6 X 12	80-	2	
10A	911 201 269 00	guide	-79	1	
11	911 201 279 01	protective flap		1	
12	477 201 557	gasket	-79	1	
12	A 944 201 553 00	gasket	80-	1	
12	944 201 553 00	gasket	80-	1	
13	911 201 272 00	fuel tank cap	-79	1	
13	A 911 201 272 01	fuel tank cap	80-	1	
13	911 201 272 02	fuel tank cap	80-	1	
14	911 201 095 00	gasket		1	
15	901 201 591 20	sleeve		1	
16	999 152 004 00	snap ring		1	
17	A 911 201 593 00	overflow socket		1	
17	911 201 593 00	overflow socket		1	
18	A 901 201 931 00	overflow hose		1	
18	911 201 731 00	overflow hose		1	
19	911 201 141 00	fuel filter		1	
20	911 201 143 00	sealing ring		1	
21	911 608 102 00	fuel pump	-79	1	
21	911 608 102 02	fuel pump	80-	1	
22	A 999 512 394 00	hose clamp		1	TURBO
22	999 512 394 00	hose clamp		1	TURBO
23	911 608 105 01	support		1	
24	911 608 206 00	bonded rubber buffer		2	
25	999 072 005 09	hexagon-head bolt M 6 X 12		1	
26	A N 010 208 5	hexagon-head bolt		1	
26	N 010 208 5	hexagon-head bolt M 6 X 8		1	
27	N 012 226 5	spring washer B 6		1	
28	N 011 524 7	washer A 6,4		1	
29	A N 010 208 5	hexagon-head bolt		2	
29	N 010 208 5	hexagon-head bolt M 6 X 8		2	
30	N 012 226 5	spring washer B 6		2	
-	999 181 168 50	hose 12 X 18,5		*	
31	-	90 MM		1	
32	999 512 554 00	hose clamp		2	
33	A 911 356 066 07	pressure line only together with 911.608.211.00 900.070.010.02 N 013.811.1		1	
33	911 356 066 07	pressure line only together with N 013.812.2 999.134.018.02	-79	1	SC
33	911 356 066 07	pressure line		1	TURBO
33	911 356 066 08	pressure line	80-	1	SC
-	999 134 018 02	banjo bolt M 12 X 1,5		1	
34	N 013 812 2	sealing ring A 12 X 15,5		1	
34A	911 608 211 00	intermediate piece		1	
(34A)	893 906 093	retaining valve		1	

Pos	Part Number	Name	Remarks	Qty	Model
35	900 123 144 30	sealing ring A 10 X 13,5		2	
35	900 123 005 20	sealing ring A 12 X 16		2	
35A	900 070 010 02	cap nut M 10 X 1,25		1	
35A	928 110 475 01	cap nut M 12 X 15,5		1	
36	911 356 202 03	rubber sleeve		4	
37	A 999 613 017 40	covering		1	
37	999 613 017 40	covering		1	
38	911 356 062 07	return line	-79	1	SC
38	911 356 062 07	return line		1	TURBO
38	911 356 062 08	return line	80-	1	SC
39	999 511 100 02	clip	-81	1	
39	999 511 093 02	clip	82-	1	
40	900 187 104 02	tapping screw B 4,8 X 13		1	
		- -- E N D -- -			

Model	Year	MG	SG	Illustration	Restrictions	Update	11:11	18.08.2006	PORSCHE PET PORSCHE
911	83	2	01	201-05		203			

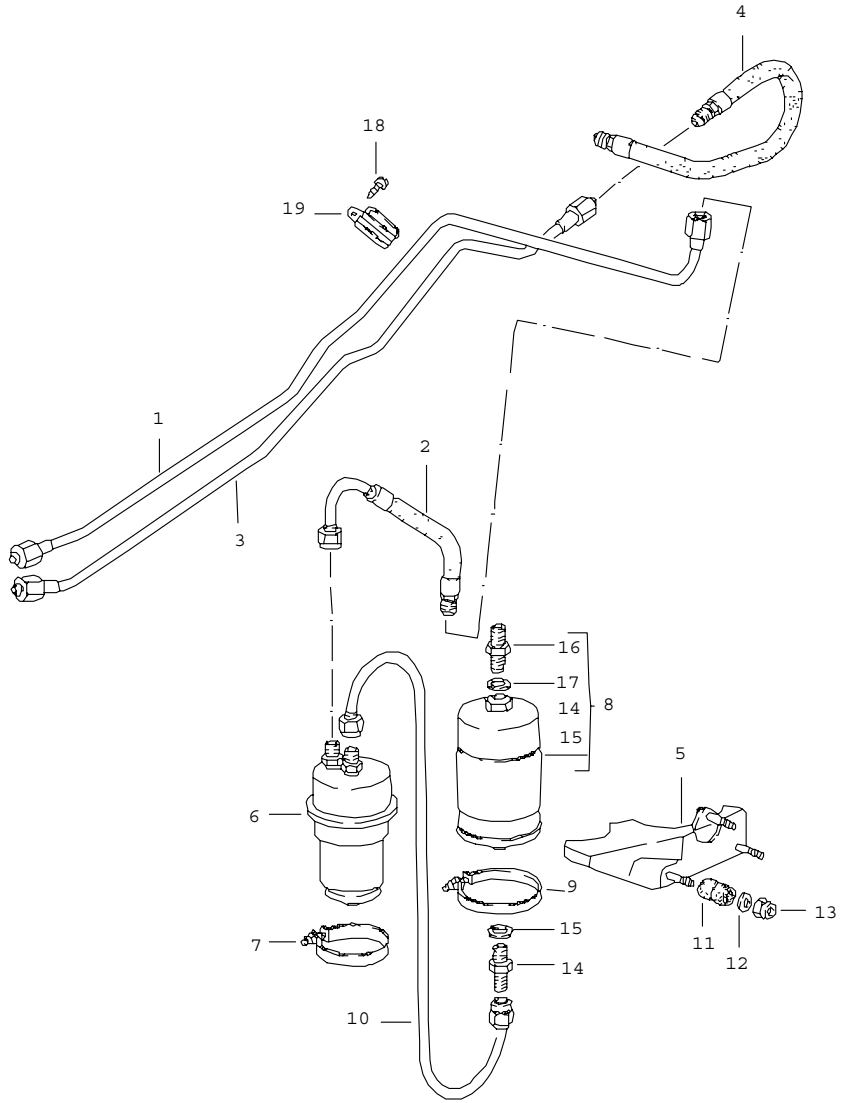

Pos	Part Number	Name	Remarks	Qty	Model
		fuel system rear			911SC
(1)	911 356 066 06	pressure line	-79	1	
1	911 356 083 00	pressure line	80-	1	
2	911 356 087 00	fuel hose	80-	1	
(3)	911 356 062 05	return line	-79	1	
3	911 356 085 00	return line	80-	1	
4	911 356 089 01	fuel hose	80-	1	
5	A 911 356 041 00	bracket		1	
5	930 356 041 01	bracket		1	
6	911 110 197 01	fuel accumulator	-79	1	
6	A 911 110 197 02	fuel accumulator	80-	1	
6	911 110 197 02	fuel accumulator	80-	1	
7	999 512 322 02	hose clamp	-79	1	
7	999 512 199 02	clip	80-	1	
8	A 930 110 448 00	fuel filter	-80	1	
8	930 110 076 00	fuel filter	-80	1	
8	928 110 147 05	fuel filter	81-	1	
9	999 512 234 02	hose clamp	-80	1	
9	999 512 235 02	hose clamp		1	
(10)	930 356 083 00	fuel line	-79	1	
10	911 356 091 00	fuel line	80	1	
10	A 911 356 091 02	fuel line	81-	1	
10	911 356 091 02	fuel line	81-	1	
11	901 504 859 20	rubber sleeve		3	
12	999 025 108 02	washer 6,4		3	
13	A 900 084 010 02	hexagon nut		3	
13	900 910 012 02	lock nut M 6		3	
14	930 110 198 00	screw socket	-80	1	

Pos	Part Number	Name	Remarks	Qty	Model	Pos	Part Number	Name	Remarks	Qty	Model
15	A 900 123 007 30	sealing ring	-80	1							
15	900 123 007 30	sealing ring	-80	1							
16	930 110 199 00	screw socket	-80	1							
17	900 123 116 30	sealing ring	-80	1							
18	900 187 104 02	tapping screw B 4,8 X 13	-79	1							
19	999 511 093 02	clip	-79	1							
		- -- E N D -- -									

Model	Year	MG	SG	Illustration	Restrictions	Update				
911	83	2	01	201-10		203	11:12	18.08.2006	PORSCHE	PET	PORSCHE

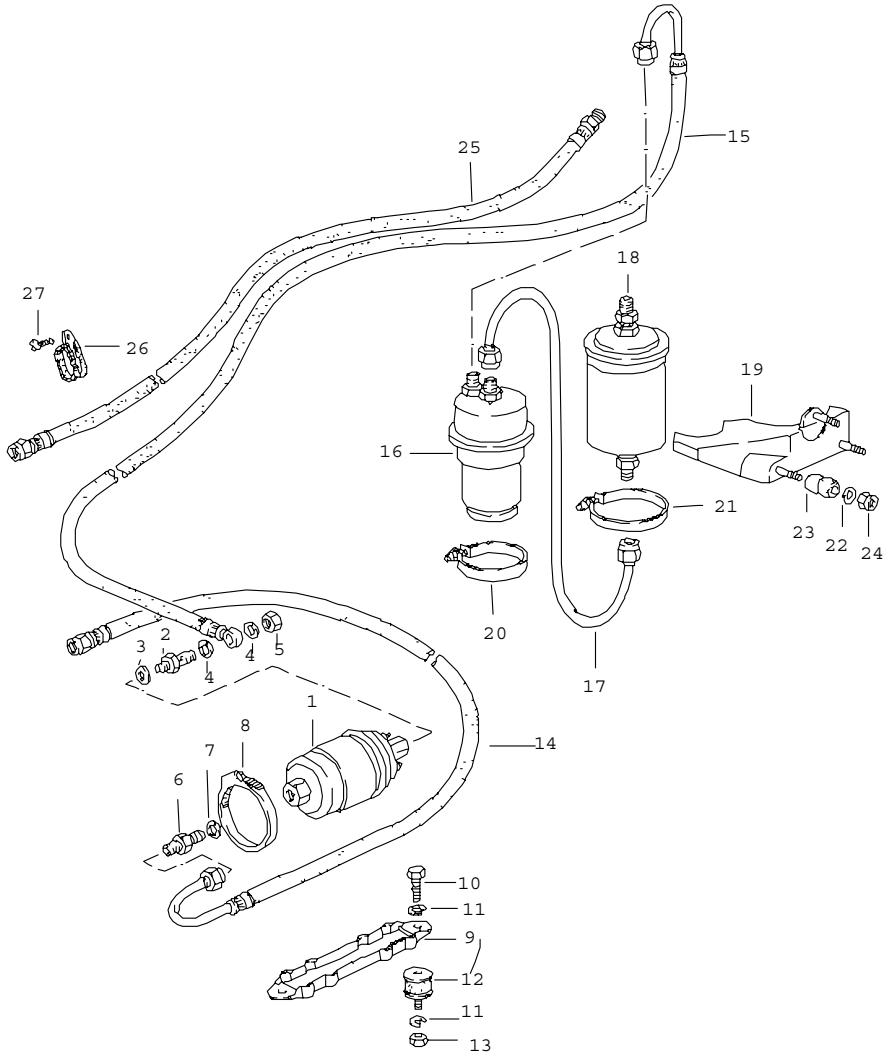

Pos	Part Number	Name	Remarks	Qty	Model
		fuel system rear			TURBO
1	930 608 113 00	fuel pump		1	
2	911 608 211 00	intermediate piece	-79	1	
3	A 900 123 043 30	sealing ring	-79	1	
3	900 123 116 30	sealing ring A 12 X 15,5	-79	1	
4	900 123 144 30	sealing ring A 10 X 13,5	-79	2	
5	900 070 010 02	cap nut	-79	1	
6	A N 020 702 1	screw socket		1	
6	N 020 702 1	screw socket		1	
7	A 900 123 007 30	sealing ring		1	
7	900 123 007 30	sealing ring A 14 X 18		1	
8	A 999 512 394 00	hose clamp		1	
8	999 512 394 00	hose clamp		1	
9	911 608 105 00	support		1	
10	N 010 208 5	hexagon-head bolt M 6 X 8		2	
11	A N 012 007 2	lock ring		4	
11	N 012 007 2	lock ring A 6		4	
12	999 703 384 00	silentbloc		2	
13	900 076 010 02	hexagon nut M 6		2	
14	930 356 068 02	fuel line		1	
15	A 930 356 081 02	pressure line only together with 911.608.211.00 900.070.010.02 900.123.033.20	-79	1	
15	A 930 356 081 04	fuel line		1	

Pos	Part Number	Name	Remarks	Qty	Model
15	930 356 081 04	fuel line only together with 900.123.043.20 999.134.018.02		1	
-	999 134 018 02	banjo bolt M 12 X 1,5		1	
16	A 911 110 197 02	fuel accumulator		1	
16	911 110 197 02	fuel accumulator		1	
17	930 356 083 00	fuel line	-80	1	
17	911 356 091 02	fuel line	81-	1	
18	930 110 139 00	fuel filter	-80	1	
18	928 110 147 05	fuel filter	81-	1	
19	A 930 356 041 01	bracket	-79	1	
19	930 356 041 01	bracket		1	
20	999 512 199 02	clip		1	
21	999 512 235 02	hose clamp		1	
22	999 025 108 02	washer 6,4		3	
23	901 504 859 20	rubber sleeve		3	
24	900 910 012 02	lock nut M 6		3	
25	930 356 062 01	return line		1	
-	999 513 010 40	tie-wrap		1	
26	999 511 100 02	clip	-81	1	
26	999 511 093 02	clip	82-	1	
27	900 187 104 02	tapping screw B 4,8 X 13		1	
		- -- E N D -- -			

Model	Year	MG	SG	Illustration	Restrictions	Update			
911	83	2	01	201-15		203	11:12	18.08.2006	PORSCHE PET PORSCHE

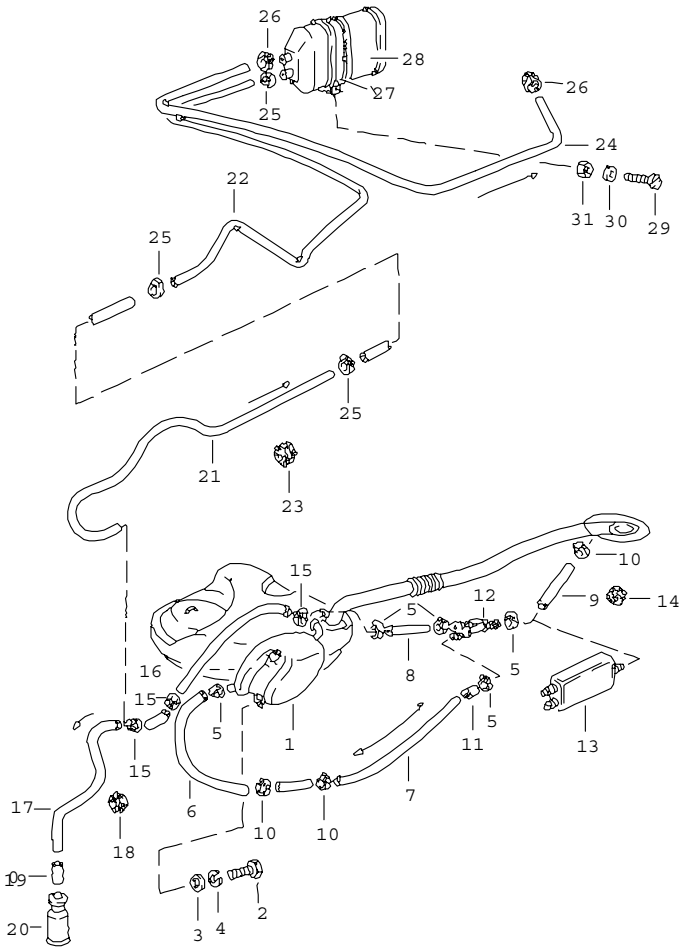

Pos	Part Number	Name	Remarks	Qty	Model
		tank ventilation			
1	A 911 201 077 02	expansion tank		1	
1	911 201 077 02	expansion tank		1	
2	900 075 057 02	hexagon-head bolt M 6 X 16		1	
3	A N 011 524 7	washer		1	
3	N 011 524 7	washer 6,4		1	
4	N 012 007 02	lock ring A 6		1	
5	A N 023 570 2	hose clamp		5	
5	N 023 570 2	hose clamp S 15/9		5	
5	999 512 554 00	hose clamp S 18/9	80-	4	
-	N 020 359 1	hose 9 X 2,5		*	
6	-	390 MM		1	
7	-	150 MM	-79	1	
7	-	250 MM	80-	1	
8	-	220 MM	-79	1	
9	-	270 MM	-79	1	
-	999 181 189 50	hose 14 X 2,5		*	
8	-	170 MM F 93098 00803>>	79-	1	TURBO
8	-	140 MM	80	1	
8	911 201 915 00	breather hose	81-	1	
9	911 201 287 01	hose	80-	1	
10	999 512 160 02	hose clamp S 13/9		3	
11	A 911 201 263 02	restrictor		1	
11	911 201 263 02	restrictor		1	
12	911 201 171 02	connecting piece	-79	1	

Pos	Part Number	Name	Remarks	Qty	Model
12	930 201 167 00	intermediate piece F 93098 00803>>	79-	1	TURBO
13	911 201 381 00	expansion tank	80-	1	
-	999 513 003 40	tie-wrap	80-	1	
14	999 702 085 50	rubber sleeve		1	
15	999 512 069 02	hose clamp S 8/7		3	
-	A N 020 361 2	hose		*	
-	N 020 361 2	hose 4 X 1,5		*	
16	-	370 MM		1	
17	-	1020 MM		1	
18	911 612 865 00	rubber sleeve		1	
19	911 201 157 01	sleeve		1	
20	999 659 015 40	protection cap		1	
		for (USA)(CDN)(J) (KALIFORNIEN) (AUS)			
-	A N 020 361 2	hose		*	
-	N 020 361 2	hose 4 X 1,5		*	
21	-	1080 MM		1	
22	-	1980 MM		1	
23	A 999 702 084 50	rubber sleeve		1	
23	999 702 084 50	rubber sleeve		1	
-	N 020 362 1	hose 12 X 2,5		*	
24	-	1750 MM		1	SC
24	-	750 MM		1	TURBO
25	999 512 069 02	hose clamp		3	
26	999 512 265 02	hose clamp S 16/9		2	
27	911 501 425 00	support		1	
	GRV	prime coated			
28	A 113 201 801 B	carbon canister		1	
28	171 201 801	carbon canister		1	
29	900 014 028 02	pan-head screw AM 6 X 20		1	
30	N 011 524 7	washer 6,4		1	
31	900 910 011 02	lock nut M 6		1	
		- -- E N D -- -			

Model	Year	MG	SG	Illustration	Restrictions	Update				
911	83	2	02	202-00		203	11:12	18.08.2006	PORSCHE	PET	PORSCHE

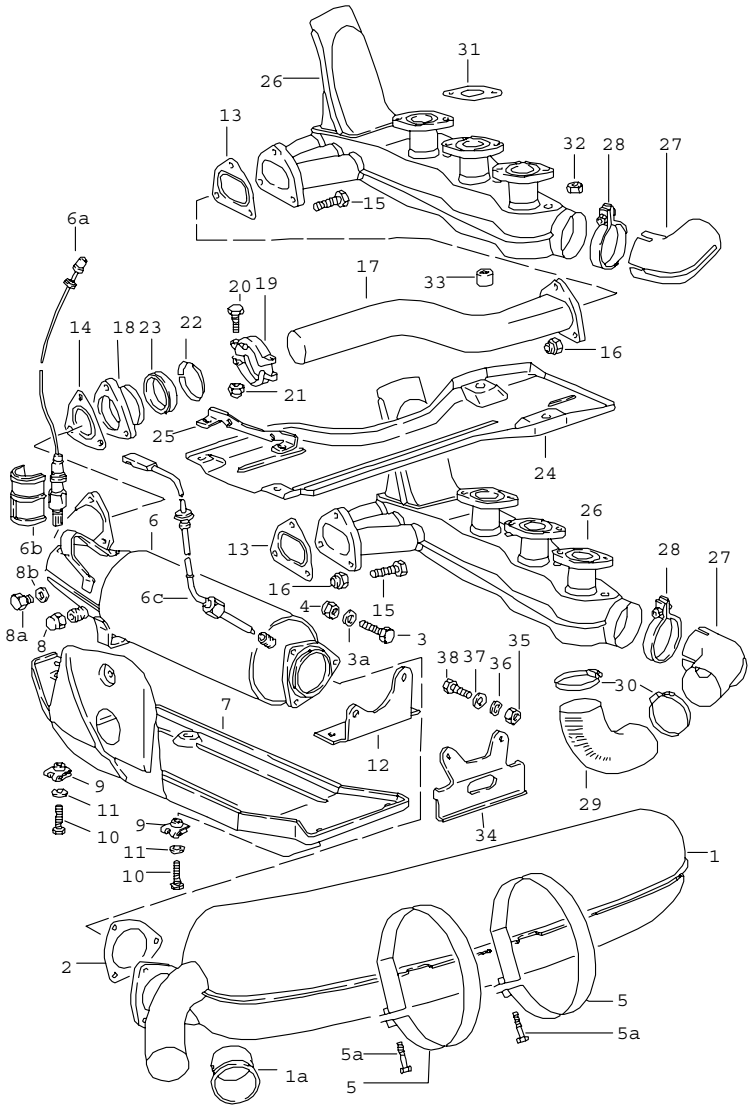

Pos	Part Number	Name	Remarks	Qty	Model
		exhaust system			911 SC
1	930 111 022 00	exhaust silencer not for (J)		1	
1	A 930 111 024 02	exhaust silencer	-79	1	(J)
1	930 111 024 02	exhaust silencer		1	(J)
1A	911 111 245 00	ornamental exhaust pipe		1	
1A	911 111 245 01	ornamental exhaust pipe	-79	1	(J)
2	* 911 111 191 01	gasket		1	
3	900 074 282 02	hexagon-head bolt M 8 X 40		3	
3A	A 900 151 008 02	washer		1	
3A	900 151 008 02	washer 8,4		1	
4	900 910 097 02	lock nut		3	
5	901 111 157 04	clip		2	
5A	900 067 161 02	pan-head screw M 10 X 50		2	
(6)	A 930 113 228 01	catalytic converter	78	1	M930.04/06
(6)	930 113 228 01	catalytic converter	78	1	M930.04/06
(6)	930 113 228 01	catalytic converter	79	1	M930.04/06
(6)	930 113 230 02	catalytic converter	80	1	M930.07
(6)	A 930 113 228 11	catalytic converter		1	M930.05/15
(6)	930 113 228 11	catalytic converter		1	M930.05/15
(6)	A 930 113 230 12	catalytic converter	80-	1	M930.08/17
(6)	930 113 230 18	catalytic converter	80-	1	M930.08/17
(6)	A 930 113 230 04	catalytic converter	81-	1	M930.16
(6)	930 113 230 09	catalytic converter	81-	1	M930.16
6A	A 911 606 123 00	oxygen sensor		1	
6A	911 606 123 00	oxygen sensor		1	
6B	911 606 133 00	protection plate	83-	1	
6C	911 606 115 00	temperature sensor		1	(J)

Pos	Part Number	Name	Remarks	Qty	Model
7	A 930 113 208 05	catalytic converter cover	78	1	(J)
7	930 113 208 05	cover for catalytic converter 930.113.228.10		1	(J)
7	A 930 113 208 03	catalytic converter cover	79	1	(J)
7	930 113 208 07	catalytic converter cover for catalytic converter 930.113.228.11		1	(J)
7	A 930 113 208 03	catalytic converter cover	80-	1	
7	930 113 208 07	catalytic converter cover		1	
(7)	930 113 233 01	catalytic converter cover	-79	1	(USA) (CDN)
8	930 113 153 00	cap		1	
8A	A 900 124 021 02	screw plug		1	
8A	900 083 080 00	hexagon-head bolt		1	
8B	900 123 050 20	sealing ring A 8 X 11,5		1	
9	999 507 326 02	captive nut		8	
10	900 075 057 02	hexagon-head bolt M 6 X 16		8	
11	N 011 666 7	washer B 6,4		8	
12	930 113 196 00	retaining bracket		1	
13	A 930 111 192 01	gasket		2	
13	930 111 192 03	gasket		2	
14	* 930 111 193 01	gasket		1	
15	900 074 282 02	hexagon-head bolt M 8 X 40		6	
16	900 910 097 02	lock nut		6	
17	A 930 111 169 05	exhaust line not for (J)		1	
17	930 111 163 05	exhaust line	-79	1	(J)(CALIF.)
(17)	A 930 111 169 05	exhaust line	80-	1	
(17)	930 111 169 05	exhaust line	80-	1	
18	930 111 157 01	compensating socket	-79	1	
19	911 111 187 00	clamp	-79	2	
20	900 074 267 02	hexagon-head bolt M 6 X 40	-79	2	
21	900 910 096 02	lock nut	-79	2	
22	* 911 111 188 02	support washer	-79	1	
23	* 911 111 189 03	gasket	-79	1	
24	930 111 182 02	cross tube covering		1	(J)
25	A 930 111 197 00	retaining bracket	-79	2	
25	A 930 111 197 01	retaining bracket		1	
25	A 930 111 197 03	retaining bracket		1	
25	930 111 197 03	retaining bracket		1	
26	930 211 025 01	heat exchanger	-79	2	
26	930 211 025 02	heat exchanger	80-	2	
27	911 211 131 00	adapter		2	
28	999 512 246 02	clip SP 68/20		2	
29	911 211 553 00	flexible pipe		1	
30	999 512 349 02	hose clamp		2	
31	930 111 191 13	gasket		6	
32	900 076 025 02	hexagon nut M 8		6	
33	999 085 001 02	socket head nut M 8		6	
34	901 111 151 04	bracket		1	
35	900 076 025 02	hexagon nut M 8		2	
36	N 012 241 8	spring washer B 8		2	
37	900 025 007 02	washer 8,4		2	

Pos	Part Number	Name	Remarks	Qty	Model	Pos	Part Number	Name	Remarks	Qty	Model
38	900 075 087 02	hexagon-head bolt M 8 X 16		2							
		- -- E N D -- -									

Model	Year	MG	SG	Illustration	Restrictions	Update				
911	83	2	02	202-05		203	11:12	18.08.2006	PORSCHE	PET	PORSCHE

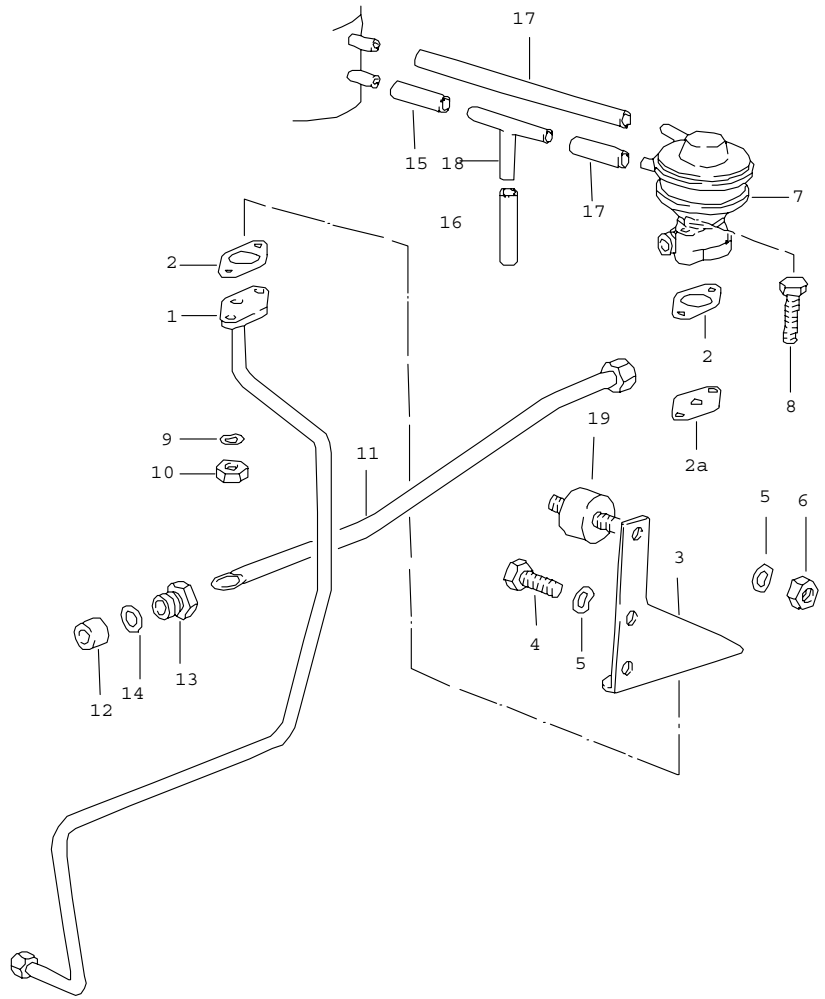

Pos	Part Number	Name	Remarks	Qty	Model
		exhaust gas recirculation			911 SC
1	930 113 190 01	pipeline		1	
2	A 911 113 179 02	gasket		1	
2	* 911 113 179 02	gasket		1	
2A	930 113 285 00	throttle plate M 659 0001 >>		1	(CALIF.)
3	911 113 175 04	retaining bracket		1	
4	N 010 239 11	hexagon-head bolt M 8 X 18		2	
5	N 012 241 8	spring washer B 8		3	
6	900 076 025 02	hexagon nut M 8		1	
7	911 113 183 01	egr valve		1	
8	N 010 347 5	hexagon-head bolt M 6 X 35		1	
8	A 900 074 151 02	hexagon-head bolt		1	
8	900 074 151 02	hexagon-head bolt M 6 X 38 M 659 0001 >>		1	
8	A 900 074 019 02	hexagon-head bolt		1	
8	900 075 343 02	hexagon-head bolt M 6 X 45		1	
8	900 074 111 02	hexagon-head bolt M 6 X 50 M 659 0001 >>		1	
9	N 012 226 5	spring washer B 6		2	
10	900 076 010 02	hexagon nut M 6		2	
11	911 113 177 03	pipeline		1	
12	* 911 113 205 02	sealing rubber		1	
13	911 113 206 00	pressure screw		1	
14	N 011 564 2	washer		1	
-	999 239 003 40	hose 3,2 X 7		*	

Model	Year	MG	SG	Illustration	Restrictions	Update			
911	83	2	02	202-05		203	11:12	18.08.2006	PORSCHE PET PORSCHE

Pos	Part Number	Name	Remarks	Qty	Model	Pos	Part Number	Name	Remarks	Qty	Model
15	-	40 MM		1							
16	-	770 MM		1							
17	-	465 MM		2							
18	999 137 004 40	t-socket		1							
19	911 110 154 00	bonded rubber buffer		1							
		- -- E N D -- -									

Model	Year	MG	SG	Illustration	Restrictions	Update				
911	83	2	02	202-10		203	11:12	18.08.2006	PORSCHE	PET	PORSCHE

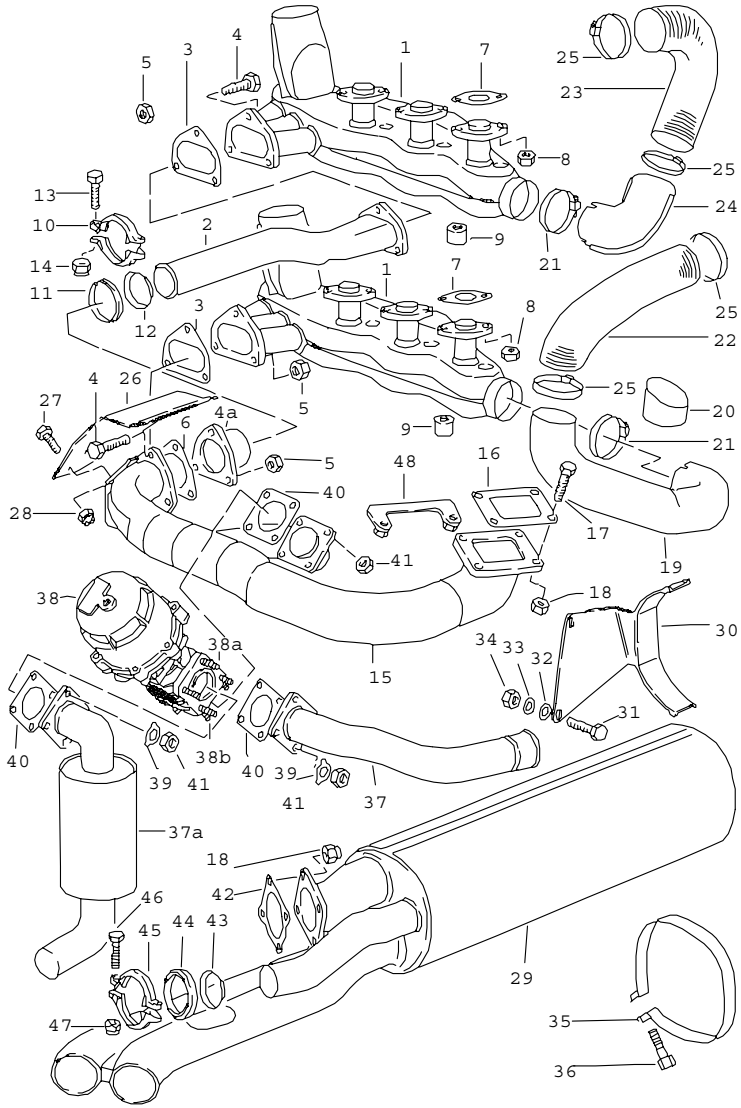

Pos	Part Number	Name	Remarks	Qty	Model
		exhaust system			TURBO M930.60/66
1	930 211 021 03	heat exchanger		2	
2	930 111 163 04	exhaust line		1	
3	* 930 111 192 01	gasket		2	
4	900 074 282 02	hexagon-head bolt M 8 X 37		6	
4A	930 111 157 00	compensating socket		1	
5	900 910 097 02	lock nut M 8		9	
6	* 930 111 193 01	gasket		1	
7	* 930 111 191 01	gasket		6	
8	900 910 097 02	lock nut M 8		6	
9	999 085 001 02	socket head nut M 8		6	
10	930 111 187 00	clamp		2	
11	* 911 111 189 03	gasket		1	
12	* 930 111 156 01	support washer		1	
13	900 074 283 02	hexagon-head bolt M 8 X 45		2	
14	900 910 097 02	lock nut M 8		2	
15	930 111 003 04	exhaust line		1	
16	* 930 123 192 01	gasket		1	
17	900 074 284 02	hexagon-head bolt M 10 X 40		4	
18	900 910 099 02	lock nut M 10		6	
19	930 211 123 00	hot air line		1	
20	930 211 197 00	hose piece		1	
21	999 512 246 02	clip		2	
22	930 211 196 00	heater hose	/L	1	
23	901 211 194 00	heater hose	/R	1	

Pos	Part Number	Name	Remarks	Qty	Model
24	911 211 131 00	adapter		1	
25	999 512 349 02	hose clamp		4	
26	930 111 128 03	cover plate		1	
27	900 075 303 02	hexagon-head bolt M 6 X 16		2	
28	900 910 096 02	lock nut M 6		2	
29	A 930 111 037 00	exhaust silencer	-79	1	
29	930 111 037 04	exhaust silencer		1	
(29)	930 111 038 06	exhaust silencer	83-	1	
30	930 111 154 03	bracket		1	
30	930 111 154 02	bracket		1	M 559
31	900 075 313 02	hexagon-head bolt M 10 X 20		2	
32	A 900 025 008 02	washer		2	
32	900 025 008 09	washer 10,5		2	
33	900 028 005 02	spring washer		2	
33	900 028 005 00	spring washer A 10		2	
34	900 910 098 02	lock nut M 10		2	
35	930 111 155 00	clip		1	
36	900 067 161 02	pan-head screw AM 10 X 50		1	
36	900 067 225 02	pan-head screw M 10X55		1	
37	930 123 031 00	wastegate line	-82	1	
37A	930 123 063 01	muffler	83-	1	
38	A 930 123 060 12	wastegate		1	
38	930 123 060 12	wastegate		1	
38A	A 900 081 048 02	stud		4	
38A	900 081 048 02	stud M 8 X 25		4	
38B	A 900 081 049 02	stud		4	
38B	900 081 049 02	stud M 8 X 32		4	
39	999 039 001 00	tab washer		4	
40	* 930 123 194 01	gasket		2	
41	900 910 097 02	lock nut M 8		8	
42	* 930 123 191 01	gasket		2	
43	* 930 123 132 02	support washer	-82	1	
44	* 930 123 134 04	gasket	-82	1	
45	930 123 133 00	clamp	-82	2	
46	900 074 286 02	hexagon-head bolt BM 6 X 40	-82	2	
47	900 910 096 02	lock nut M 6	-82	2	
48	930 123 114 02	supporting plate		1	

- -- E N D -- -

Model	Year	MG	SG	Illustration	Restrictions	Update			
911	83	2	02	202-15		203	11:13	18.08.2006	PORSCHE PET PORSCHE

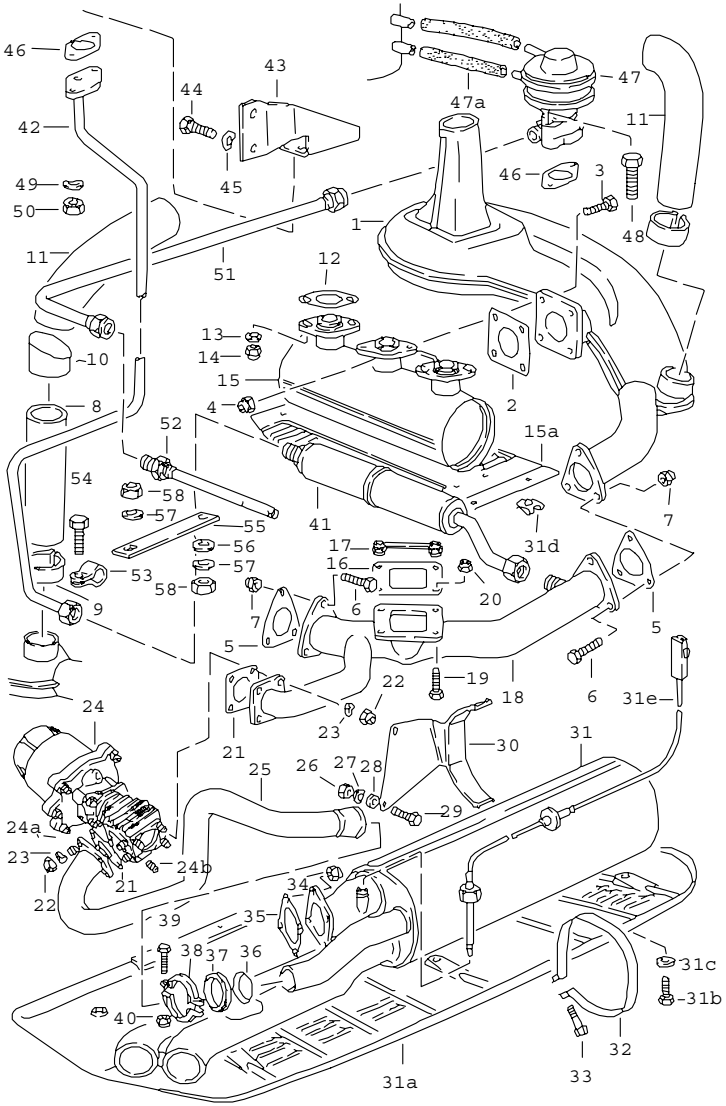

Pos	Part Number	Name	Remarks	Qty	Model
		exhaust system exhaust gas recirculation			TURBO M930.61/62 M930.63/64 M930.65
(1)	930 211 027 02	heat exchanger	/L	1	
1	930 211 028 02	heat exchanger	/R	1	
2	* 930 111 162 01	gasket		2	
3	900 075 325 02	hexagon-head bolt M 10 X 35		8	
4	900 910 098 02	lock nut M 10		8	
5	* 930 111 160 01	gasket		2	
6	900 074 284 02	hexagon-head bolt M 10 X 40		6	
7	900 910 098 02	lock nut M 10		6	
8	930 211 126 00	hot air line		1	
9	999 512 266 02	clip		1	
10	930 211 197 00	hose piece		1	
11	930 211 196 00	heater hose	/L	1	
11	930 211 195 00	heater hose	/R	1	
12	* 911 113 190 01	gasket		6	
13	900 025 007 02	washer 8,4		12	
14	900 910 097 02	lock nut M 8		12	
15	930 113 150 01	reactor		2	
15	930 113 150 02	reactor		2	(J)
-	930 113 151 00	entrance tube		6	
15A	911 113 208 01	protection for reactor		2	(J)
-	999 591 327 02	speed nut		8	(J)
-	N 013 890 5	screw		8	(J)
-	N 011 666 7	washer		8	(J)
16	* 930 123 192 01	gasket		1	

Pos	Part Number	Name	Remarks	Qty	Model
17	930 123 114 02	supporting plate		1	
18	930 111 035 03	exhaust manifold		1	
19	900 074 284 02	hexagon-head bolt M 10 X 40		4	
20	900 910 099 02	lock nut M 10		4	
21	* 930 123 194 01	gasket		2	
22	900 910 097 02	lock nut M 8		8	
23	999 039 001 00	tab washer		8	
24	A 930 123 060 12	wastegate		1	
24	930 123 060 12	wastegate		1	
24A	A 900 081 048 02	stud		4	
24A	900 081 048 02	stud M 8 X 25		4	
24B	A 900 081 049 02	stud		4	
24B	900 081 049 02	stud M 8 X 32		4	
25	930 123 033 01	wastegate line		1	
26	900 910 098 02	lock nut M 10		2	
27	900 028 005 00	spring washer A 10		2	
28	A 900 025 008 02	washer		2	
28	900 025 008 09	washer 10,5		2	
29	900 075 313 02	hexagon-head bolt M 10 X 20		2	
30	930 111 154 03	bracket		1	
30	930 111 154 02	bracket		1	M 559
31	A 930 111 037 00	exhaust silencer	-79	1	
31	930 111 037 04	exhaust silencer		1	
31	A 930 111 037 03	exhaust silencer		1	(J)
31	930 111 037 03	exhaust silencer		1	(J)
31A	930 111 184 01	muffler cover		1	(J)
-	930 111 185 03	retaining bracket	-79	1	(J)
-	930 111 185 03	retaining bracket	80-	1	(J)
-	900 075 312 02	hexagon-head bolt M 6 X 16	80-	1	(J)
-	900 910 096 02	lock nut M 6	80-	1	(J)
31B	900 075 303 02	hexagon-head bolt M 6 X 16		8	(J)
31C	N 011 666 7	washer		8	(J)
31D	999 507 326 02	captive nut		8	(J)
31E	930 606 115 01	temperature sensor		1	(J)
32	930 111 155 00	clip		1	
33	900 067 161 02	pan-head screw M 10 X 50		1	
34	900 910 099 02	lock nut M 10		4	
35	* 930 123 191 01	gasket		2	
36	* 930 123 132 02	support washer		1	
37	* 930 123 134 04	gasket		1	
38	930 123 133 00	clamp		2	
39	900 074 286 02	hexagon-head bolt BM 6 X 40		2	
40	900 910 096 02	lock nut M 6		2	
41	930 113 173 00	exhaust gas filter		1	
42	930 113 176 00	pipeline		1	
43	930 113 175 01	retaining bracket		1	
44	A N 010 239 11	hexagon-head bolt		2	
44	N 010 239 11	hexagon-head bolt M 8 X 18		2	
45	N 012 241 8	spring washer		2	
46	* 911 113 179 02	gasket		1	

Pos	Part Number	Name	Remarks	Qty	Model
47	930 113 283 00	egr valve		1	
-	A 999 181 281 50	vacuum hose		*	
-	999 181 281 50	hose 3,7 X 7		*	
47A	-	400 MM		2	
48	N 010 347 5	hexagon-head bolt M 6 X 35		1	
48	A 900 074 019 02	hexagon-head bolt		1	
48	900 075 343 02	hexagon-head bolt M 6 X 45		1	
49	N 012 226 5	spring washer		2	
50	900 076 010 02	hexagon nut M 6		2	
51	930 113 116 02	pipe		1	
52	930 113 117 00	nozzle		1	
-	* 900 123 018 30	sealing ring A 16 X 20		1	
53	999 512 243 02	clip		1	
54	A 900 075 010 02	hexagon-head bolt		1	
54	999 072 005 09	hexagon-head bolt M 6 X 12		1	
55	911 113 123 00	support		1	
56	N 011 524 7	washer		1	
57	N 011 524 7	washer		2	
58	A 900 076 010 02	hexagon nut		2	
58	900 076 010 02	hexagon nut M 6		2	
		- -- E N D -- -			

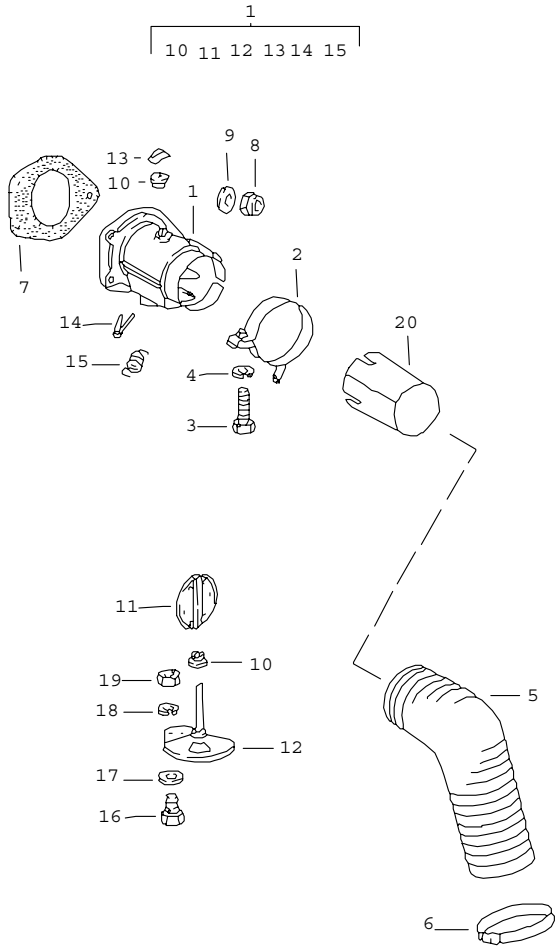

Pos	Part Number	Name	Remarks	Qty	Model
		heating air supply see tpi NR. 5 MAI 87			
1	911 211 013 00	heat control box	/L	1	
(1)	911 211 014 00	heat control box	/R	1	
2	901 211 051 21	clip	/L	1	
(2)	901 211 052 21	clip	/R	1	
3	N 010 217 9	hexagon-head bolt M 6 X 20		2	
4	A 900 027 014 01	lock ring		2	
4	N 012 006 4	lock ring B 6		2	
5	A 911 211 622 00	connecting hose		2	
5	A 930 211 622 01	connecting hose 300 MM long		2	
5	A 930 211 622 01	connecting hose 330 MM long		1	
5	930 211 622 01	connecting hose 330 MM long		2	
6	999 512 349 02	hose clamp		2	
7	A 911 211 297 00	gasket		2	
7	911 211 297 00	gasket		2	
8	A 900 084 010 02	hexagon nut		6	
8	900 910 012 02	lock nut M 6		6	
9	N 011 524 7	washer 6,4		6	
10	901 211 255 21	bearing		4	
11	901 211 028 22	air flap		2	
12	901 211 035 21	rotary slide	/L	1	
(12)	901 211 036 21	rotary slide	/R	1	
13	999 507 222 02	mecano-speed-fix		2	

Pos	Part Number	Name	Remarks	Qty	Model
14	A 900 021 014 02	cotter pin		2	
14	N 012 530 1	cotter pin 3 X 15		2	
15	999 522 013 01	spring		2	
16	901 211 683 00	clamping screw		2	
17	999 025 042 02	washer		4	
18	900 027 011 01	lock ring B 4		2	
19	N 011 004 6	hexagon nut M 4		2	
20	911 659 119 00	connecting piece		1	M 424
		- -- E N D -- -			

Pos	Part Number	Name	Remarks	Qty	Model

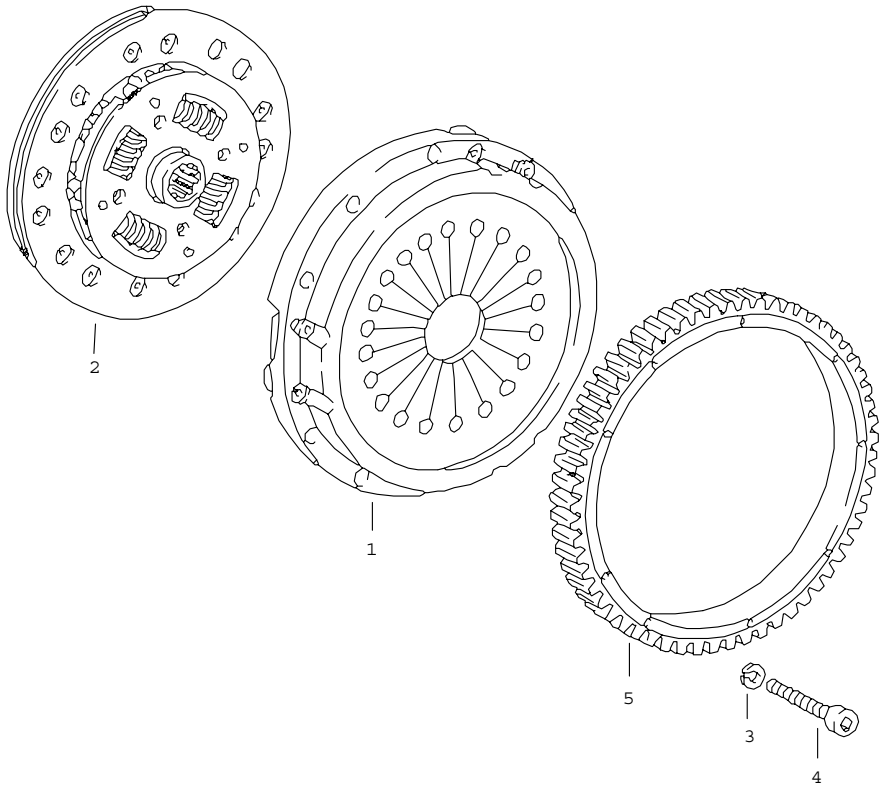

Pos	Part Number	Name	Remarks	Qty	Model
		clutch			
1	A 915 116 001 27	pressure plate		1	SC
1	> 915 116 001 27	pressure plate		1	SC
1	930 116 021 03	pressure plate		1	TURBO
2	A 915 116 051 10	clutch plate		1	SC
2	A 915 116 011 19	clutch plate		1	SC
2	A 915 116 011 22	drive plate		1	SC
2	915 116 011 22	drive plate		1	SC
2	930 116 049 14	clutch plate		1	TURBO
3	A 900 027 015 02	lock ring		9	SC
3	900 027 015 02	lock ring B 8		9	SC
3	A N 012 241 8	spring washer		9	TURBO
3	N 012 241 8	spring washer B 8		9	TURBO
4	900 067 090 02	pan-head screw M 8 X 42		9	SC
4	900 074 136 02	hexagon-head bolt M 8 X 80		9	TURBO
5	911 116 239 00	starter ring		1	SC
5	930 116 230 02	starter ring		1	TURBO
-	915 116 911 00	repair kit for clutch		1	SC
-	930 116 911 00	repair kit for clutch		1	TURBO
		- -- E N D -- -			

Model	Year	MG	SG	Illustration	Restrictions	Update				
911	83	3	01	301-05		203	11:13	18.08.2006	PORSCHE	PET	PORSCHE

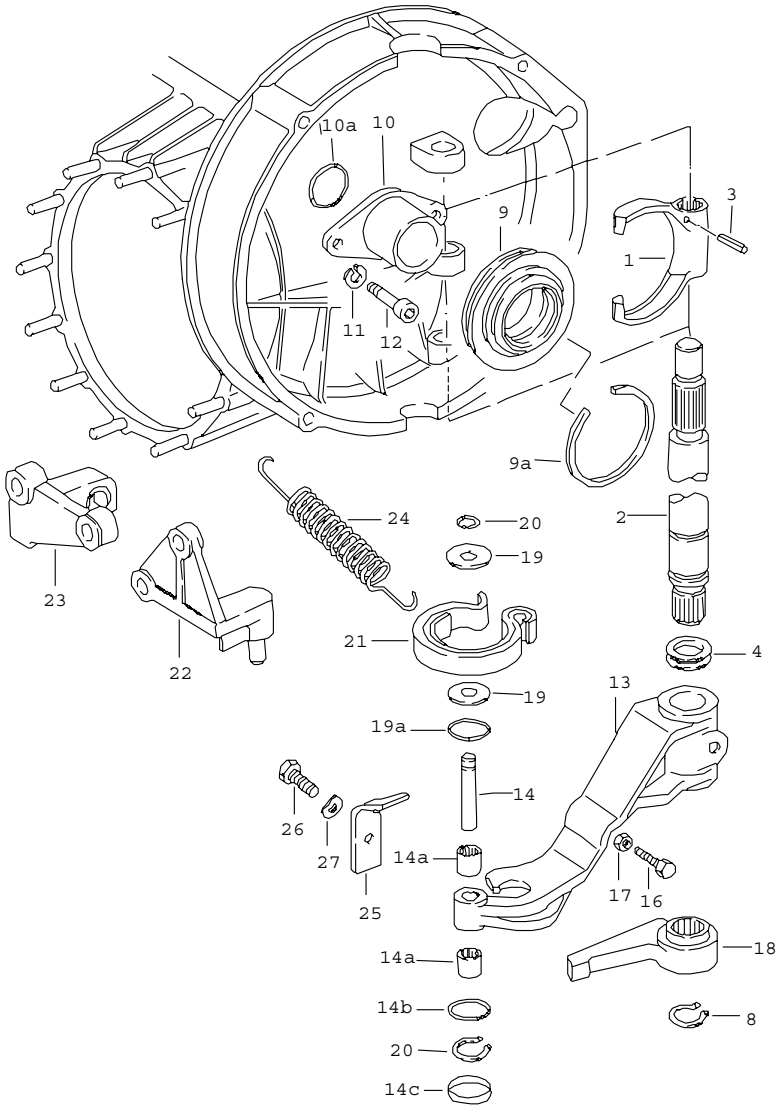

Pos	Part Number	Name	Remarks	Qty	Model
		clutch release			
1	915 116 712 01	release fork		1	SC
(1)	930 116 712 02	release fork		1	TURBO
2	915 116 133 05	shaft		1	SC
(2)	930 116 133 04	shaft		1	TURBO
3	900 095 050 00	tensioning sleeve		1	
4	915 301 139 00	sealing ring		3	SC
4	930 301 139 00	sealing ring		2	TURBO
(4)	930 301 140 00	sealing ring		2	TURBO
8	N 012 418 1	circlip 18 X 1,2		1	
9	915 116 082 80	clutch release bearing		1	SC
(9)	930 116 081 11	clutch release bearing		1	TURBO
9A	999 152 073 01	snap ring SW 50		1	SC
10	930 116 813 00	guide tube		1	TURBO
(10)	915 116 087 03	guide tube		1	SC
10A	999 701 359 40	o-ring 40 X 1,5		1	SC
11	N 012 006 4	lock ring B 6		2	TURBO
12	900 186 032 02	pan-head screw M 6 X 16		2	TURBO
(12) A	900 270 055 02	rais. counters. h. tap. s.		2	SC
(12)	900 270 055 02	countersunk-head screw M 6 X 14		2	SC
(13)	930 116 713 06	clutch release lever		1	TURBO
13	915 116 713 06	clutch release lever		1	SC
14	915 116 624 00	bolt		1	SC
14A	999 201 212 00	needle sleeve		2	SC
14B	900 234 502 01	support washer		1	SC
14C	900 036 016 02	cover		1	SC

Pos	Part Number	Name	Remarks	Qty	Model
16	930 116 701 00	adjusting screw		1	SC
16	A 900 075 033 02	hexagon-head bolt		1	TURBO
16	900 075 033 02	hexagon-head bolt M 8 X 40		1	TURBO
17	A N 011 118 11	hexagon nut		1	
17	N 011 118 11	hexagon nut M 8		1	
18	A 915 116 717 00	change lever		1	SC
18	915 116 717 00	change lever		1	SC
(18)	930 116 717 02	change lever		1	TURBO
19	930 116 617 00	washer		1	SC
19A	999 701 209 40	o-ring		1	SC
20	A 900 041 003 01	circlip		2	SC
20	N 012 408 2	circlip 8 X 0,8		2	SC
21	915 116 064 00	spring		1	SC
(21)	930 116 064 09	spring		1	TURBO
22	915 116 070 00	bearing bracket		1	SC
(22)	930 116 611 06	bearing bracket		1	TURBO
23	915 116 613 01	support		1	SC
23	915 116 613 01	support		1	SC
24	915 116 614 02	tension spring		1	
25	930 116 714 06	spring hanger		1	TURBO
26	A 900 075 087 02	hexagon-head bolt		1	TURBO
26	900 075 087 02	hexagon-head bolt M 8 X 16		1	TURBO
27	N 012 241 8	spring washer B 8		1	TURBO
-	999 701 482 40	o-ring		2	TURBO
		- -- E N D -- -			

Pos	Part Number	Name	Remarks	Qty	Model

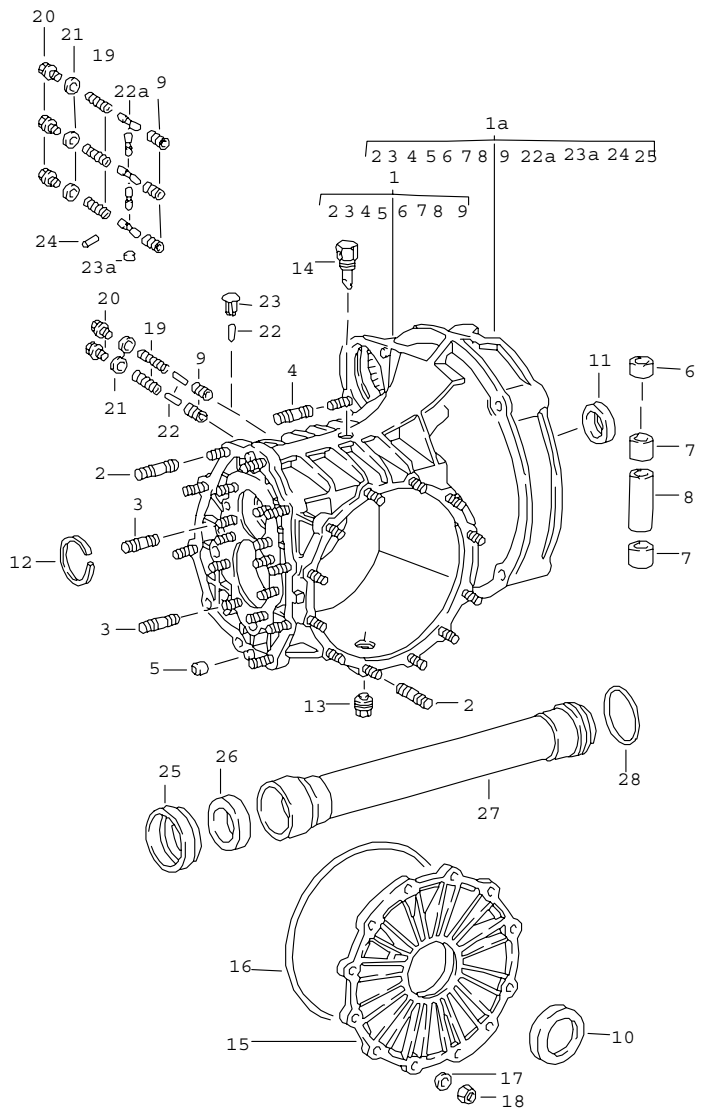

Pos	Part Number	Name	Remarks	Qty	Model
		replacement transmission transmission case			
-	> 915 300 010 61	replacement transmission ready for installation 5. speed	-79	1	G 915/61
-	915 300 913 61	replacement transmission ready for installation limited-slip differential 5. speed	-79	1	G 915/61.12
-	> 915 300 010 62	replacement transmission ready for installation 5. speed	80-	1	G 915/62
-	915 300 913 62	replacement transmission ready for installation limited-slip differential 5. speed	80-	1	G 915/62.12
-	915 300 010 63	replacement transmission ready for installation 5. speed	80-	1	G 915/63 (USA)(CDN)
-	915 300 913 63	replacement transmission ready for installation limited-slip differential 5. speed	80-	1	G 915/63.12 (USA)(CDN)
-	> 930 300 010 34	replacement transmission ready for installation 4. speed		1	G 930/34
-	> 930 300 911 34	replacement transmission ready for installation limited-slip differential 4. speed		1	G 930/34.12
1	915 301 901 04	transmission case		1	SC
1A	930 301 901 02	transmission case		1	TURBO
2	A 999 062 139 02	stud		16	
2	999 062 139 02	stud M 8 X 26		16	
2	A 999 062 009 02	stud		8	TURBO

Pos	Part Number	Name	Remarks	Qty	Model
2	999 062 009 02	stud M 8 X 28		8	TURBO
(2)	999 062 098 02	stud		4	SC
(2)	999 062 098 02	stud M 8 X 38		4	SC
3	A 999 062 006 02	stud		6	TURBO
3	999 062 006 02	stud M 8 X 20		6	TURBO
(3)	A 999 062 008 02	stud		4	TURBO
(3)	999 062 008 02	stud M 8 X 25		4	TURBO
(3)	900 061 057 02	stud		10	SC
(3)	999 062 073 02	stud BM 8 X 15		10	SC
-	930 301 141 00	bolt		1	TURBO
-	900 061 057 02	stud BM 8 X 15		1	TURBO
4	A 999 062 182 02	stud		1	
4	999 062 182 02	stud M 10 X 25		1	
5	900 012 110 00	straight pin 10 M 6 X 14		2	
6	915 301 119 00	bearing sleeve		1	
7	915 301 129 00	bush		2	SC
7	999 531 010 00	bush		2	TURBO
8	915 301 133 00	pipe		1	SC
9	999 504 047 00	threaded insert		3	
10	999 113 183 40	radial shaft seal		2	
11	A 915 302 381 00	shaft seal	-80	1	SC
11	A 999 113 327 40	shaft seal		1	SC
11	999 113 327 40	shaft seal		1	SC
12	999 041 327 01	snap ring SB 62		1	SC
13	999 064 020 02	screw plug with magnet M 24 X 1,5		1	
14	904 301 071 00	bleeder		1	
15	915 301 311 05	transmission cover		1	SC
(15)	930 301 311 02	transmission cover		1	TURBO
16	999 701 392 40	o-ring		1	SC
16	999 701 437 40	o-ring		1	TURBO
(17)	N 012 241 8	spring washer B 8		12	
18	900 076 025 02	hexagon nut M 8		12	
19	915 303 232 00	spring		2	
20	A 900 075 352 02	hexagon-head bolt		2	
20	900 075 352 02	hexagon-head bolt		2	
21	A 900 123 066 30	sealing ring		2	SC
21	900 123 066 30	sealing ring A 10 X 16		2	SC
22	915 303 131 00	detent		4	
22A	930 303 131 00	detent		2	
23	915 301 126 00	locking bolt		1	SC
23A	999 501 028 30	plug		1	TURBO
24	900 308 026 00	roll pin 3,5 X 22		2	TURBO
25	930 301 133 00	guide ring		1	TURBO
26	930 302 332 00	shaft seal		1	TURBO
27	930 302 053 00	pipe		1	TURBO
28	999 701 440 40	o-ring		1	TURBO
		- -- E N D -- -			

Model	Year	MG	SG	Illustration	Restrictions	Update			
911	83	3	02	302-05		203	11:14	18.08.2006	PORSCHE PET PORSCHE

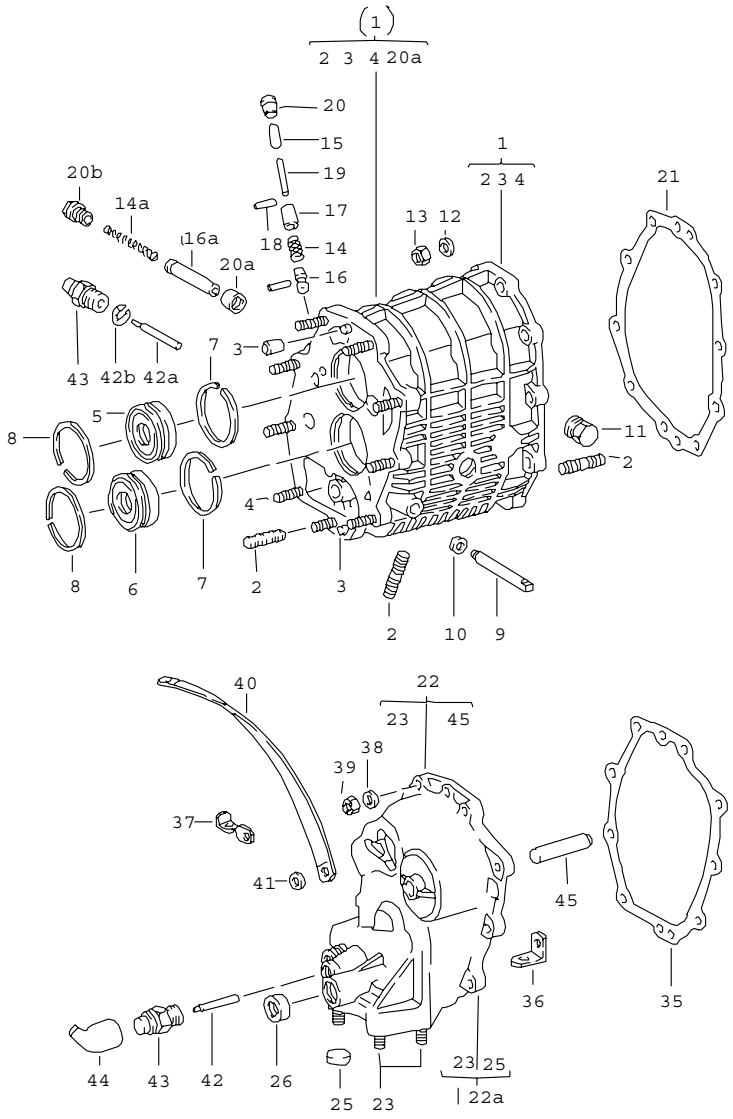

Pos	Part Number	Name	Remarks	Qty	Model
		gear housing transmission cover			
1	915 301 902 00	gear housing		1	SC
(1)	930 301 911 00	gear housing		1	TURBO
2	A 999 062 139 02	stud		13	
2	999 062 139 02	stud M 8 X 26		13	
(2)	A 999 062 007 02	stud		1	TURBO
(2)	999 062 007 02	stud M 8 X 22		1	TURBO
(2)	A 999 062 052 02	stud		1	TURBO
(2)	999 062 052 02	stud M 8 X 42		1	TURBO
(2)	A 999 062 010 02	stud		3	TURBO
(2)	999 062 010 02	stud M 8 X 35		3	TURBO
3	900 012 110 00	straight pin 10M 6 X 14		2	
4	A 999 062 044 02	stud		2	SC
4	999 062 044 02	stud M 8 X 30		2	SC
(4)	A 999 062 009 02	stud		1	TURBO
(4)	999 062 009 02	stud M 8 X 28		1	TURBO
5	999 110 025 00	cylindrical-roller bearing		1	
6	915 302 399 05	cylindrical-roller bearing		1	SC
6	999 110 076 00	cylindrical-roller bearing		1	TURBO
7	900 111 001 00	snap ring SP 62		2	
8	999 152 031 01	snap ring SB 68		2	
9	914 301 307 00	bolt for reverse lever		1	
10	900 025 007 02	washer 8,4		1	

Pos	Part Number	Name	Remarks	Qty	Model
11	999 064 019 02	screw plug		1	SC
11	900 064 009 02	screw plug		1	TURBO
12	N 012 241 8	spring washer B 8		10	SC
13	900 076 025 02	hexagon nut M 8		10	SC
14	915 303 232 00	spring		1	SC
14A	930 303 230 08	spring		1	TURBO
15	915 303 131 00	detent		1	SC
16	915 303 130 00	detent		1	SC
16A	930 303 135 01	detent		1	TURBO
17	915 303 135 00	sleeve		1	SC
18	900 308 009 00	spiral clamping pin 3,5 X 18		2	SC
19	915 303 271 00	pin		1	SC
20	915 301 126 00	locking bolt		1	SC
20A	999 504 107 00	threaded insert		1	TURBO
20B	930 303 253 01	screw plug		1	TURBO
21	915 301 191 00	gasket		1	SC
21	930 301 191 00	gasket		1	TURBO
22A	915 301 903 03	transmission cover		1	SC
22	930 301 903 00	transmission cover		1	TURBO
23	999 062 005 02	stud		4	SC
23	999 062 005 02	stud M 8 X 20		4	SC
23	999 062 007 02	stud M 8 X 22		4	TURBO
25	999 703 385 40	plug		1	SC
26	999 113 185 40	shaft seal		1	
35	915 301 351 00	gasket		1	SC
35	930 301 351 00	gasket		1	TURBO
36	901 423 369 00	retaining bracket	-82	1	
37	915 301 369 00	clip		1	
38	N 012 241 8	spring washer B 8		9	
39	900 076 025 02	hexagon nut M 8		9	
40	999 611 920 20	ground strap		1	
41	999 151 022 02	washer 20 X 8,4 X 2		2	
42	915 303 145 00	cam follower		1	SC
42A	930 303 175 01	pin		1	TURBO
42B	999 041 503 01	locking ring		1	TURBO
43	914 613 541 02	back-up light switch		1	
44	914 613 491 00	rubber cap		1	SC
45	930 302 228 00	bolt		1	TURBO
		- -- E N D -- -			

Model	Year	MG	SG	Illustration	Restrictions	Update	11:14	18.08.2006	PORSCHE PET PORSCHE
911	83	3	03	303-00		203			

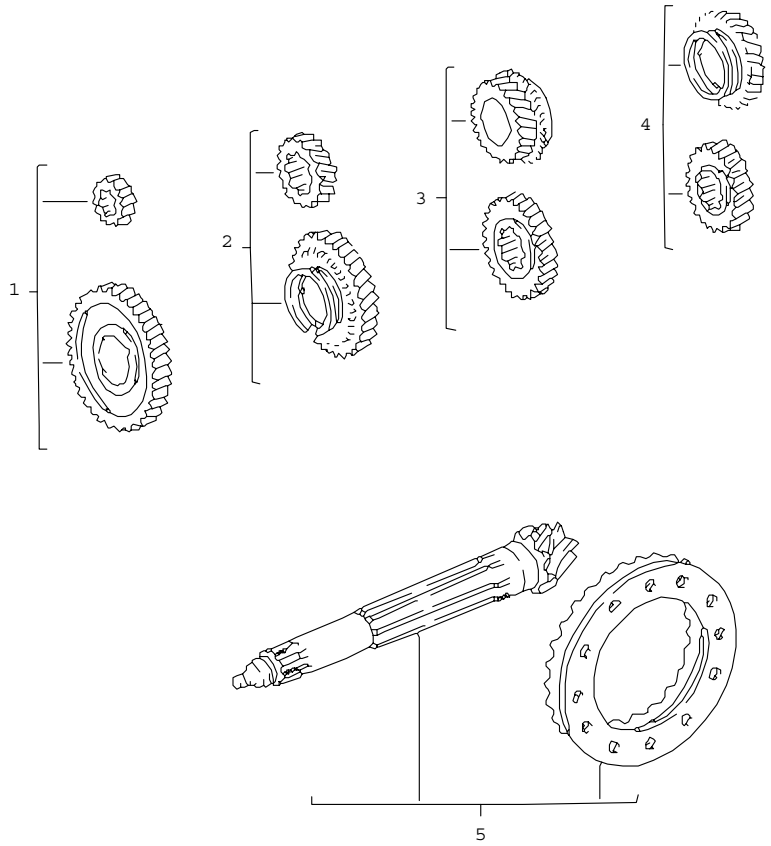

Pos	Part Number	Name	Remarks	Qty	Model
		gear sets 4. speed transmission			G 930/34
1	930 302 901 06	gear set 1. speed Z = 16:36 (FA)		1	
2	930 302 902 04	gear set 2. speed Z = 23:30 (NU)		1	
3	930 302 903 02	gear set 3. speed Z = 28:25 (SP)		1	
4	930 302 904 03	gear set 4. speed Z = 32:20 (WK)		1	
5	930 302 911 01	ring gear and pinion shaft 9:38		1	
		- -- E N D -- -			

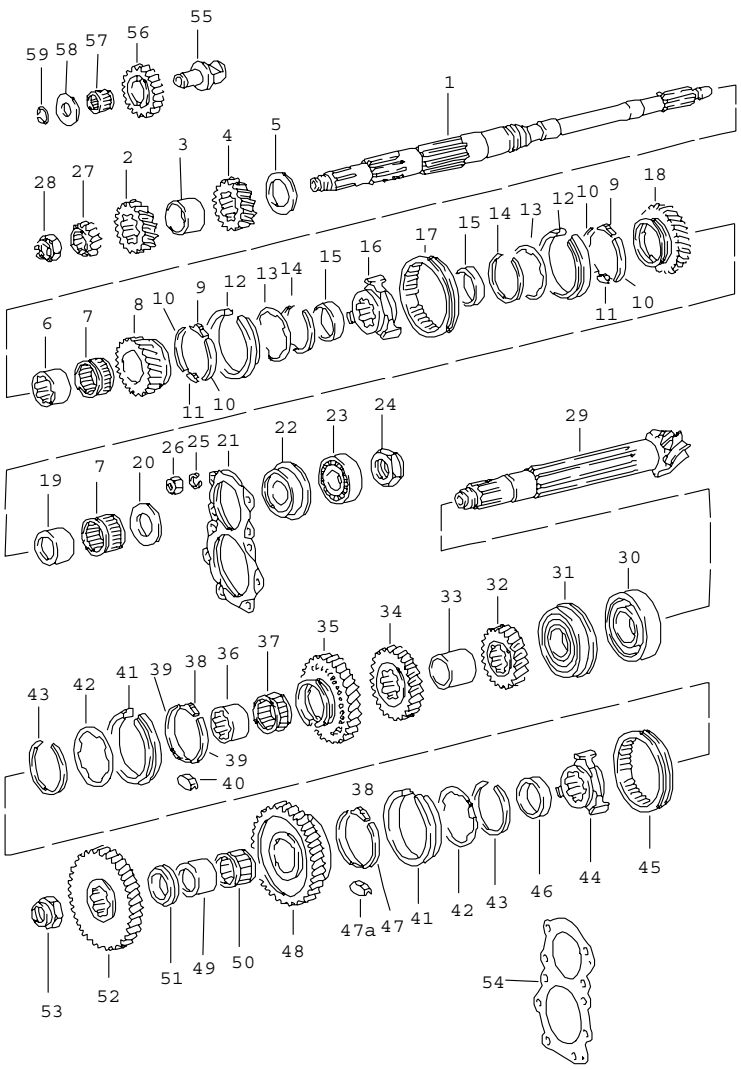

Pos	Part Number	Name	Remarks	Qty	Model
		gears and shafts 4. speed transmission			G 930/34
		gear sets see group 3/03/00			
1	930 302 101 01	drive shaft		1	
2	-	fixed gear wheel 1. speed		1	
3	930 302 265 00	spacer sleeve		1	
4	-	fixed gear wheel 2. speed		1	
5	930 302 293 00	thrust washer		1	
6	930 302 263 00	bush 3. speed		1	
7	999 201 470 00	needle cage		2	
8	-	loose gear wheel 3. speed		1	
9	930 302 325 00	stone 3./4. speed		2	
10	A 911 302 316 00	brake band		4	
10	911 302 316 08	brake band 3./4 speed		4	
11	911 302 317 01	stop 3./4 speed		2	
12	930 302 303 00	synchroniser ring 3./4 speed		2	
13	930 302 311 00	lock washer		2	
14	930 302 313 01	snap ring		2	
15	930 302 274 00	spacer ring		2	
16	930 302 402 00	guide sleeve		1	

Pos	Part Number	Name	Remarks	Qty	Model
17	911 302 411 20	shift sleeve		1	
18	-	loose gear wheel 4. speed		1	
19	930 302 264 00	bush 4. speed		1	
20	930 302 291 00	thrust washer		1	
21	930 302 121 00	tensioning plate		1	
22	999 052 030 00	four-point bearing		1	
23	930 302 391 00	cylindrical-roller bearing		1	
24	930 302 281 00	collar nut		1	
25	A 900 027 015 02	lock ring		10	
25	900 027 015 02	lock ring		10	
26	900 076 025 02	hexagon nut M 8		10	
27	930 302 221 00	reverse gear wheel		1	
28	930 302 451 00	collar nut		1	
29	-	pinion shaft		1	
30	A 999 110 146 00	cylindrical-roller bearing		1	
30	999 110 146 00	cylindrical-roller bearing		1	
31	917 301 391 00	four-point bearing		1	
32	-	fixed gear wheel 4. speed		1	
33	930 302 266 02	spacer ring		1	
34	-	fixed gear wheel 3. speed		1	
35	-	loose gear wheel 2. speed		1	
36	930 302 262 00	bush 2. speed		1	
37	999 201 047 00	needle cage		2	
38	930 302 315 00	stone 2. speed		1	
38	930 302 316 00	stone 1. speed		1	
39	928 302 318 02	double barricade tape 2. speed		2	
40	928 302 322 00	stop 2. speed		1	
41	930 302 301 00	synchroniser ring		2	
42	930 302 331 00	lock washer		2	
43	930 302 333 01	snap ring		2	
44	930 302 401 00	guide sleeve		1	
45	930 302 411 01	shift sleeve		1	
46	930 302 271 00	spacer ring		1	
47	A 928 302 319 08	double barricade tape		1	
47	928 302 319 08	double barricade tape 1. speed		1	
47A	928 302 320 01	stop 1. speed		1	
48	-	loose gear wheel 1. speed		1	
49	930 302 261 00	inner ring		1	
50	A 999 201 156 00	needle cage		1	
50	999 201 156 00	needle cage		1	
51	930 302 292 00	thrust washer		1	
52	930 302 223 00	reverse gear wheel		1	
53	930 302 453 00	collar nut		1	
54	915 302 268 03	adjusting shim 0,10 MM		X	

Pos	Part Number	Name	Remarks	Qty	Model	Pos	Part Number	Name	Remarks	Qty	Model
(54)	915 302 268 04	adjusting shim 0,15 MM		X							
(54)	915 302 268 05	adjusting shim 0,20 MM		X							
55	930 302 269 01	sleeve		1							
56	930 302 222 00	reverse idler gear		1							
57	999 201 115 00	needle cage		1							
58	930 302 229 00	washer		1							
59	999 152 053 01	snap ring		1							
		- -- E N D -- -									

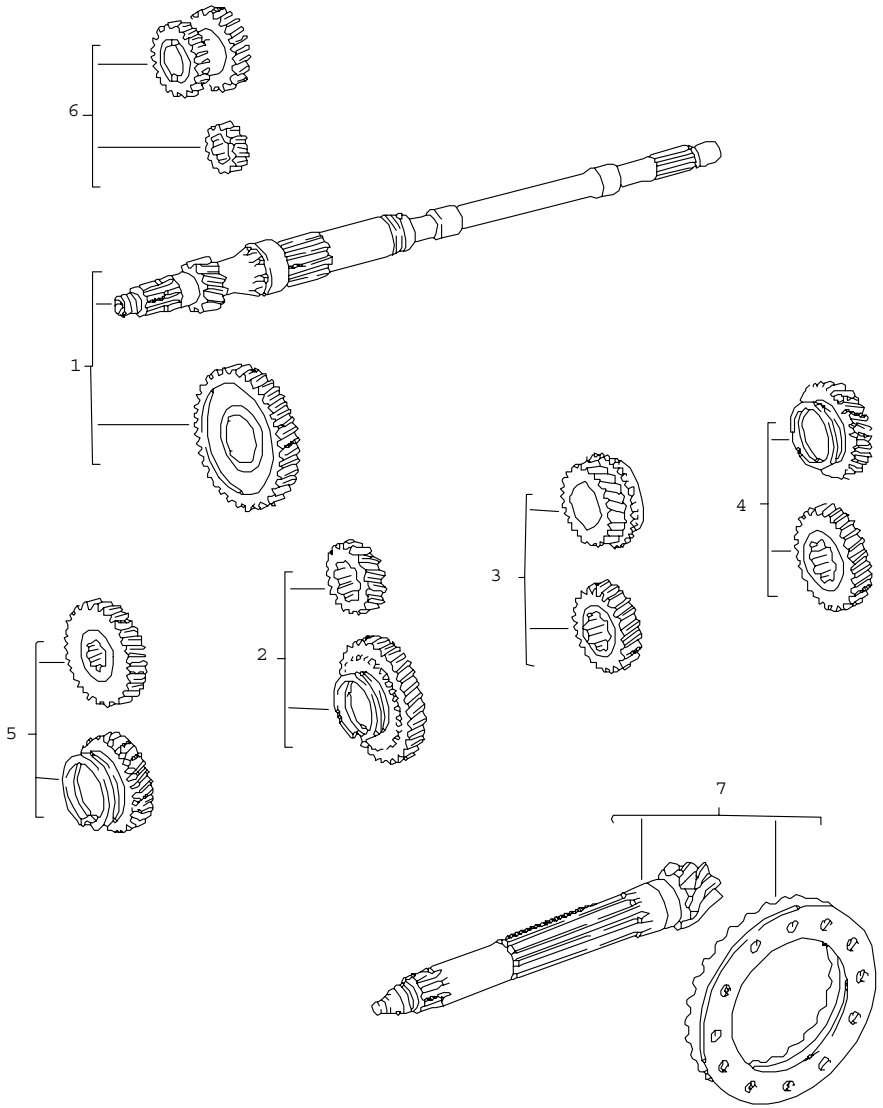

Pos	Part Number	Name	Remarks	Qty	Model
		gear sets 5. speed transmission			
		transmission G.915.61			
1	A 915 302 921 14	gear set 1. speed Z = 11:35 (AZ)		1	
1	915 302 921 14	gear set 1. speed Z = 11:35 (AZ)		1	
2	915 302 902 39	gear set 2. speed Z = 18:33 (HX)		1	
3	923 302 903 23	gear set 3. speed Z = 23:29 (NT)		1	
4	923 302 904 28	gear set 4. speed Z = 26:26 (QQ)		1	
5	923 302 905 23	gear set 5. speed Z = 28:23 (SN)		1	
6	915 302 912 04	gear set reverse gear		1	
7	915 302 911 17	ring gear and pinion shaft 8:31		1	
		transmission G.915.62			
1	A 915 302 921 14	gear set 1. speed Z = 11:35 (AZ)		1	
1	915 302 921 14	gear set 1. speed Z=11:35 (AZ)		1	

Pos	Part Number	Name	Remarks	Qty	Model
2	915 302 902 39	gear set 2. speed Z = 18:33 (HX)		1	
3	923 302 903 23	gear set 3. speed Z = 23:29 (NT)		1	
4	923 302 904 28	gear set 4. speed Z = 26:26 (QQ)		1	
5	923 302 905 28	gear set 5. speed Z = 28:22 (SN)		1	
6	915 302 912 04	gear set reverse gear		1	
7	915 302 911 17	ring gear and pinion shaft 8:31		1	
		transmission G915.63	80-		(USA)(CDN)
1	A 915 302 921 14	gear set 1. speed Z = 11:35 (AZ)		1	
1	915 302 921 14	gear set 1. speed Z=11:35 (AZ)		1	
2	915 302 902 24	gear set 2. speed Z = 18:32 (HX)		1	
3	923 302 903 23	gear set 3. speed Z = 23:29 (NT)		1	
4	923 302 904 28	gear set 4. speed Z = 26:26 (QQ)		1	
5	923 302 905 23	gear set 5. speed Z = 28:23 (SN)		1	
6	915 302 912 04	gear set reverse gear		1	
7	915 302 911 17	ring gear and pinion shaft 8:31		1	

- -- E N D -- -

Model	Year	MG	SG	Illustration	Restrictions	Update				
911	83	3	03	303-15		203	11:15	18.08.2006	PORSCHE	PET	PORSCHE

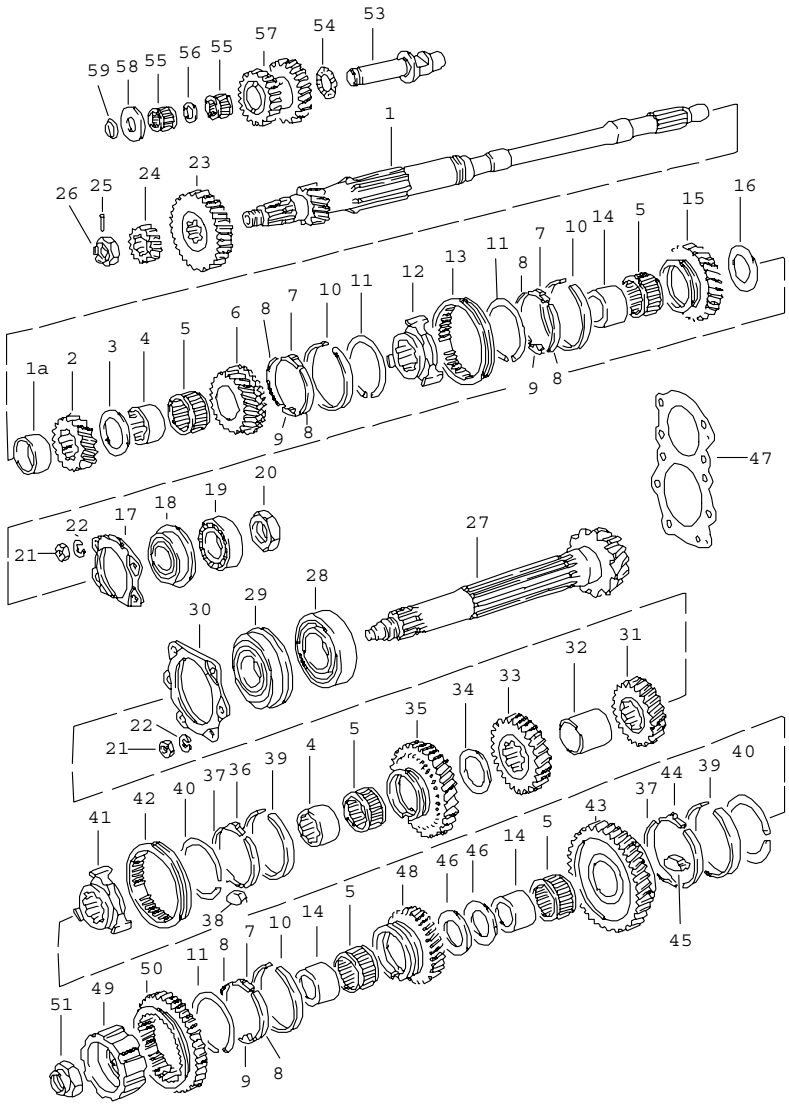

Pos	Part Number	Name	Remarks	Qty	Model
		gears and shafts 5. speed transmission			G 915
		gear sets see group 3/03/10			
1	-	drive shaft		1	
1A	915 302 267 00	spacer sleeve		1	
2	-	fixed gear wheel 2. speed		1	
3	915 302 292 00	thrust washer		1	
4	915 302 262 00	bush		2	
5	999 201 470 00	needle cage		1	
6	-	loose gear wheel 3. speed		1	
7	911 302 315 00	stone 3./5. speed		3	
8	A 911 302 316 00	brake band		6	
8	911 302 316 08	brake band 3./5. speed		6	
9	911 302 317 01	stop 3./5. speed		3	
10	911 302 301 06	synchroniser ring 3./5. speed		3	
11	911 302 311 01	circlip		3	
12	911 302 402 20	guide sleeve		1	
13	911 302 411 20	shift sleeve		1	
14	915 302 261 00	bush		3	
15	-	loose gear wheel 4. speed		1	
16	915 302 294 01	thrust washer		1	

Pos	Part Number	Name	Remarks	Qty	Model
17	915 302 121 03	tensioning plate		1	
18	999 052 030 00	four-point bearing		1	
19	999 110 032 00	cylindrical-roller bearing		1	
20	999 034 033 00	hexagon nut		1	
21	502 08 310	nut M 8		10	
22	900 142 002 01	lock ring		10	
23	-	fixed gear wheel 5. speed		1	
24	-	reverse gear wheel		1	
26	900 079 009 00	castle nut M 18 X 1,5		1	
25	900 309 005 00	roll pin 4 X 26		1	
27	-	pinion shaft		1	
28	A 999 110 146 00	cylindrical-roller bearing		1	
28	999 110 146 00	cylindrical-roller bearing		1	
29	999 052 043 00	four-point bearing		1	
30	915 302 123 03	tensioning plate		1	
31	-	fixed gear wheel 4. speed		1	
32	915 302 265 01	spacer sleeve		1	
33	-	fixed gear wheel 3. speed		1	
34	915 302 293 00	thrust washer		1	
35	-	loose gear wheel 2. speed		1	
36	915 302 315 01	stone 2. speed		1	
37	A 928 302 318 02	double barricade tape		1	
37	928 302 318 02	double barricade tape 2nd gear		1	
(37)	A 928 302 319 08	double barricade tape		1	
(37)	928 302 319 08	double barricade tape 1. speed		1	
38	928 302 322 00	stop 2. speed		1	
39	915 302 301 04	synchroniser ring 2. speed		1	
(39)	915 302 301 06	synchroniser ring 1. speed		1	
40	915 302 311 01	circlip		2	
41	915 302 401 02	guide sleeve		1	
42	930 302 411 02	shift sleeve		1	
43	-	loose gear wheel 1. speed		1	
44	915 302 315 01	stone 1. speed		1	
45	928 302 321 00	stop		1	
46	915 302 291 00	thrust washer		2	
47	915 302 268 03	adjusting shim 0,10 MM		1	
47	915 302 268 04	adjusting shim 0,15 MM		X	
47	915 302 268 05	adjusting shim 0,20 MM		X	
48	-	loose gear wheel 5. speed		1	
49	915 302 405 01	guide sleeve		1	
50	A 915 302 227 09	shifting gear		1	
50	915 302 227 09	shifting gear		1	

Pos	Part Number	Name	Remarks	Qty	Model	Pos	Part Number	Name	Remarks	Qty	Model
51	915 302 282 00	collar nut		1							
53	915 302 228 03	bolt		1							
54	999 202 001 00	axial needle bearing cage		1							
55	999 201 107 00	needle cage		2							
56	915 302 231 00	intermediate ring		1							
57	-	reverse idler gear		1							
58	915 302 229 01	thrust washer		1							
59	999 701 169 40	o-ring		1							
59	999 701 169 40	o-ring		1							
		- -- E N D -- -									

Model	Year	MG	SG	Illustration	Restrictions	Update	11:15	18.08.2006	PORSCHE PET PORSCHE
911	83	3	04	304-00		203			

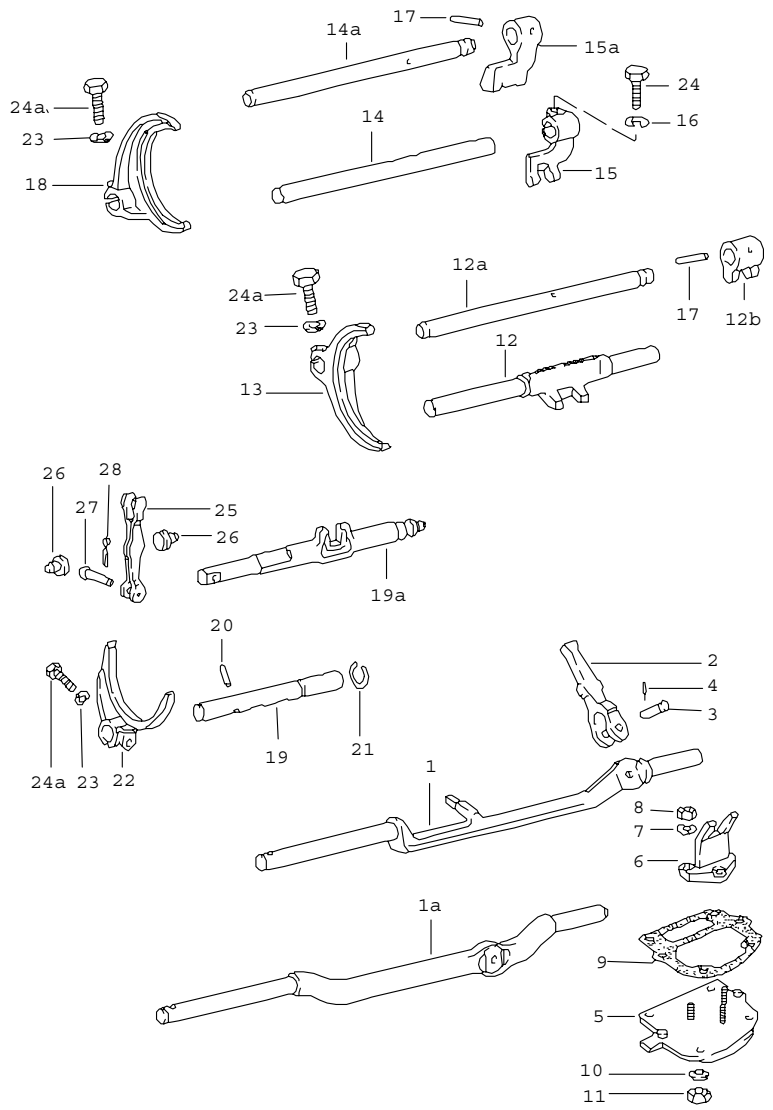

Pos	Part Number	Name	Remarks	Qty	Model
		shift rods forks 5. speed transmission			G 915 G 930
1	915 303 132 00	gear shift rod		1	SC
1A	930 303 132 00	gear shift rod		1	TURBO
2	915 303 133 00	shift lever		1	SC
2	930 303 133 00	shift lever		1	TURBO
3	901 303 171 01	bolt		1	
4	A N 012 512 1	cotter pin		1	
4	N 012 512 1	cotter pin 2 X 12		1	
5	915 303 023 02	cover		1	
6	A 915 303 129 09	fork	-81	1	SC
6	915 303 129 09	fork		1	SC
(6)	930 303 129 02	fork		1	TURBO
7	A 900 027 014 01	lock ring		3	
7	N 012 006 4	lock ring B 6		3	
8	900 076 010 02	hexagon nut M 6		3	
9	915 303 225 00	gasket		1	
10	N 012 241 8	spring washer		4	
11	900 076 025 02	hexagon nut M 8		4	
12	915 303 101 00	gear shift rod 1./2. speed		1	SC
12A	930 303 101 01	gear shift rod 1./2. speed		1	TURBO
12B	930 303 111 03	fork		1	TURBO
13	915 303 111 00	shift fork 1./2. speed		1	SC

Pos	Part Number	Name	Remarks	Qty	Model
13	930 303 110 02	shift fork 1./2. speed		1	TURBO
14	915 303 103 50	gear shift rod 3./4. speed		1	SC
14A	930 303 103 01	gear shift rod 3./4. speed		1	TURBO
15	915 303 115 09	fork	-81	1	SC
15	915 303 115 09	fork		1	SC
15A	930 303 115 03	fork		1	TURBO
16	A 900 027 015 02	lock ring		1	
16	900 027 015 02	lock ring B 8		1	
17	900 309 003 00	roll pin 5 X 24		2	TURBO
18	915 303 112 00	shift fork 3./4. speed		1	SC
(18)	930 303 112 02	shift fork 3./4. speed		1	TURBO
19	A 915 303 105 09	gear shift rod 5. speed reverse gear	-81	1	SC
19	915 303 105 09	gear shift rod 5. speed reverse gear		1	SC
19A	930 303 105 03	gear shift rod reverse gear		1	TURBO
20	900 309 005 00	roll pin 4 X 26		1	SC
22	915 303 113 01	shift fork 5th speed reverse gear		1	SC
23	N 012 241 1	spring washer B 8 X 15		3	
24	A 900 075 136 02	hexagon-head bolt		1	
24	N 010 233 6	hexagon-head bolt M 8 X 28		1	
24A	900 075 099 02	hexagon-head bolt M 8 X 30		3	
25	U 930 303 019 00	reverse lever		1	TURBO
25	930 303 019 01	reverse lever use also: 930 303 123 01		1 1	
26	930 303 121 00	spacer bolt		2	TURBO
27	U 930 303 123 00	bolt		1	TURBO
27	930 303 123 01	bolt use also: 930 303 019 01		1 1	
28	A 900 021 002 00	cotter pin		1	TURBO
28	900 021 002 02	cotter pin 1,5 X 12		1	TURBO

- -- E N D -- -

Model	Year	MG	SG	Illustration	Restrictions	Update	11:15	18.08.2006	PORSCHE PET PORSCHE
911	83	3	05	305-00		203			

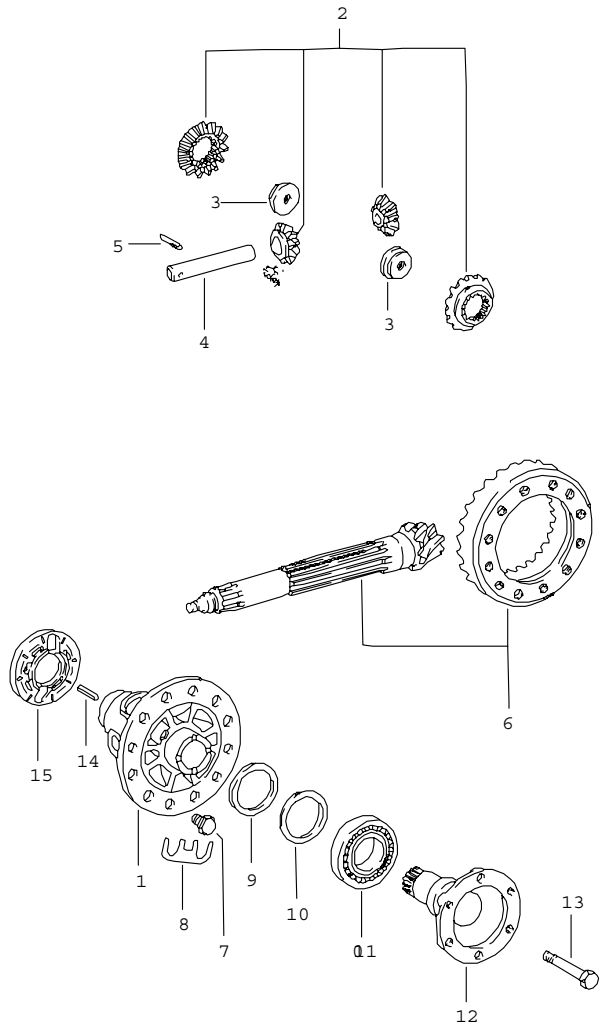

Pos	Part Number	Name	Remarks	Qty	Model
		differential the following part number G >> 718 2611 G 718 7923 >> G >> 718 9196 G 719 0011 >> G >> 719 0152 use			
(1)	925 332 212 01	housing		1	SC
(2)	911 332 902 00	differential pinions 1 set		1	SC SC
(3)	911 332 206 01	threaded piece		2	SC
-	999 152 014 00	snap ring		2	SC
(4)	911 332 207 00	differential bolt		1	SC
-	911 332 208 00	armature		1	SC
(5)	900 308 005 00	roll pin		1	SC
(7)	915 332 276 00	hexagon-head bolt		12	SC
(12)	923 332 209 02	joint flange		2	SC
-	901 332 261 11	washer		2	SC
(13)	901 332 275 12	elastic bolt		2	SC
1	A 930 332 212 01	differential housing F >>91BS1 02621 F >>91BS1 41422 F >>91BS1 21247 F >>91BS1 61178 F >>93BS0 00623 F >>93BS0 50055 F >>91BS1 29622 F >>91BS1 69526		1	
1	930 332 212 01	differential housing F 91BS1 02622>> F 91BS1 41423>> F 91BS1 21248>> F 91BS1 61179>> F 93BS0 00624>> F 93BS0 50056>> F 91BS1 29623>> F 91BS1 69527>> housing		1	

Pos	Part Number	Name	Remarks	Qty	Model
2	928 332 902 00	differential pinions 1 set F >>91BS1 02621 F >>91BS1 41422 F >>91BS1 21247 F >>91BS1 61178 F >>93BS0 00623 F >>93BS0 50055 F >>91BS1 29622 F >>91BS1 69526		1	
2	928 332 902 01	differential pinions 1 set F 91BS1 02622>> F 91BS1 41423>> F 91BS1 21248>> F 91BS1 61179>> F 93BS0 00624>> F 93BS0 50056>> F 91BS1 29623>> F 91BS1 69527>>		1	
3	A 928 332 279 02	nut F >>91BS1 02621 F >>91BS1 41422 F >>91BS1 21247 F >>91BS1 61178 F >>93BS0 00623 F >>93BS0 50055 F >>91BS1 29622 F >>91BS1 69526		2	
3	928 332 279 02	nut F 91BS1 02622>> F 91BS1 41423>> F 91BS1 21248>> F 91BS1 61179>> F 93BS0 00624>> F 93BS0 50056>> F 91BS1 29623>> F 91BS1 69527>>		2	
4	005 409 177 00	differential bolt F >>91BS1 02621 F >>91BS1 41422 F >>91BS1 21247 F >>91BS1 61178 F >>93BS0 00623 F >>93BS0 50055 F >>91BS1 29622 F >>91BS1 69526		1	
4	928 332 207 05	differential bolt F 91BS1 02622>> F 91BS1 41423>> F 91BS1 21248>> F 91BS1 61179>> F 93BS0 00624>> F 93BS0 50056>> F 91BS1 29623>> F 91BS1 69527>>		1	
5	900 309 035 00	roll pin		1	
6	915 302 911 17	ring gear and pinion shaft 8 : 31		1	SC
(6)	930 302 911 01	ring gear and pinion shaft 9 : 38		1	TURBO
7	A 928 332 276 03	hexagon-head bolt		12	
7	928 332 276 03	hexagon-head bolt		12	
8	901 332 285 01	tab washer		6	
9	915 332 265 00	adjusting ring 2,4 MM		X	
(9)	915 332 265 01	adjusting ring 2,5 MM		X	
(9)	915 332 265 02	adjusting ring 2,6 MM		X	
(9)	915 332 265 03	adjusting ring 2,7 MM		X	
(9)	915 332 265 04	adjusting ring 2,8 MM		X	
(9)	915 332 265 05	adjusting ring 2,9 MM		X	
(9)	915 332 265 06	adjusting ring 3,0 MM		X	
(9)	915 332 265 07	adjusting ring 3,1 MM		X	
(9)	915 332 265 08	adjusting ring 3,2 MM		X	
(9)	915 332 265 09	adjusting ring 3,3 MM		X	
(9)	915 332 265 10	adjusting ring 3,4 MM		X	

Pos	Part Number	Name	Remarks	Qty	Model
(9)	915 332 265 11	adjusting ring 3,5 MM		X	
(9)	915 332 265 12	adjusting ring 3,6 MM		X	
(9)	915 332 265 13	adjusting ring 3,7 MM		X	
10	915 332 263 00	washer 0,25 MM		X	
11	999 059 027 00	taper roller bearing		2	
11	999 059 064 00	taper roller bearing		1	TURBO
12	930 332 209 03	joint flange		2	TURBO
12	915 332 209 12	joint flange		2	SC
13	A 900 074 291 02	hexagon-head bolt M 10 X 80		2	
13	900 074 291 02	hexagon-head bolt M 10 X 78		2	
14	900 095 078 00	tensioning sleeve 4 X 14		1	
15	915 318 045 03	magnet carrier disc		1	
		- -- E N D -- -			

Model	Year	MG	SG	Illustration	Restrictions	Update	11:15	18.08.2006	PORSCHE	PET	PORSCHE
911	83	3	05	305-05		203					

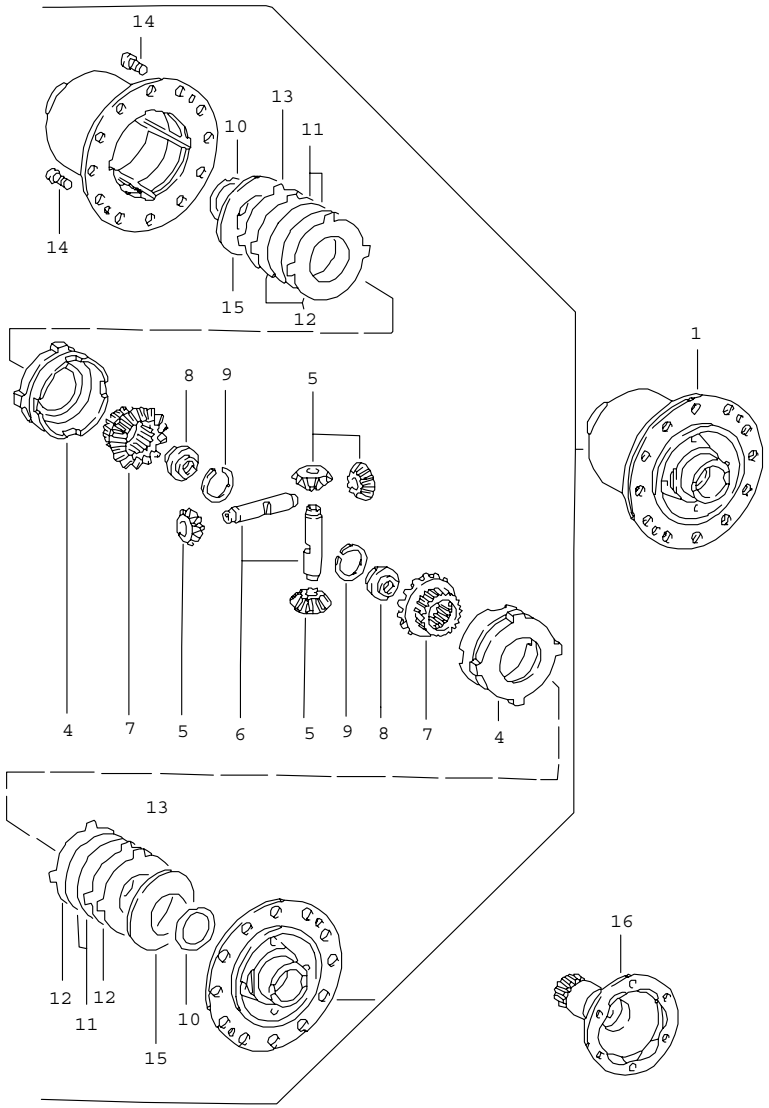

Pos	Part Number	Name	Remarks	Qty	Model
		limited-slip differential			
1	915 332 053 12	limited-slip differential 40 %	SPM	1	SC
1	930 332 053 03	limited-slip differential 40 %		1	
1	930 332 053 03	limited-slip differential 40 %		1	
4	901 332 511 11	thrust ring		2	
5	A 915 332 531 02	bevel pinion		4	
5	915 332 531 02	bevel pinion		4	
6	A 915 332 541 02	differential shaft		2	
6	915 332 541 02	differential shaft		2	
7	901 332 535 11	shaft bevel gear	SPM	2	SC
7	930 332 535 01	shaft bevel gear		2	
8	A 901 332 206 12	threaded piece	SPM	2	SC
8	915 332 206 02	threaded piece use also:	SPM	2	SC
-	915 332 541 02	differential shaft		2	
8	928 332 279 01	threaded disc		2	
9	999 152 014 00	snap ring SW 32	SPM	2	SC
10	901 332 561 11	thrust washer		2	
11	A 917 332 551 10	inner disc		4	
11	951 332 551 00	inner disc 2,0 MM		4	
12	917 332 552 10	disc with external splines 1,9 MM		4	
12	917 332 552 11	disc with external splines 2,0 MM		4	
12	917 332 552 12	disc with external splines 2,1 MM		4	
13	930 332 553 00	lamina 1,4 MM		2	
14	A 900 119 002 00	pan-head screw		2	

Model	Year	MG	SG	Illustration	Restrictions	Update			
911	83	3	05	305-05		203	11:15	18.08.2006	PORSCHE PET PORSCHE

Pos	Part Number	Name	Remarks	Qty	Model
14	N 014 765 2	pan-head screw M 6 X 10		2	
-	900 095 078 00	tensioning sleeve 4 X 14		1	
15	A 928 332 555 00	cup spring	-81	2	
15	928 332 555 00	cup spring		2	
16	915 332 209 12	joint flange		2	SC
16	925 332 209 05	joint flange	SPM	2	SC
16	930 332 209 03	joint flange		2	TURBO
		- -- E N D -- -			

Pos	Part Number	Name	Remarks	Qty	Model

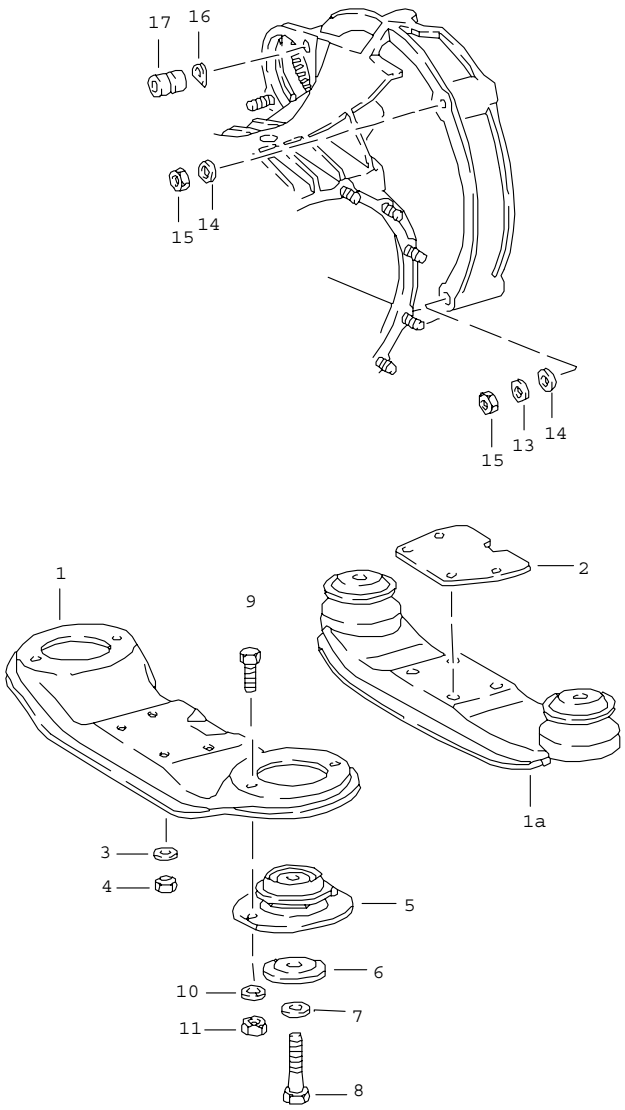

Pos	Part Number	Name	Remarks	Qty	Model
		transmission suspension			
1	911 375 033 01	transmission carrier		1	SC
1A	930 375 031 00	transmission carrier		1	TURBO
2	930 375 311 00	plate		1	TURBO
3	900 025 007 02	washer 8,4		4	
4	900 910 022 02	lock nut		4	
5	911 375 043 00	bearing		2	SC
6	901 305 311 00	seat		4	
7	900 027 017 02	lock ring B 12		2	
8	901 305 317 00	hexagon-head bolt		2	SC
(8)	930 375 317 00	hexagon-head bolt		2	TURBO
9	900 075 087 02	hexagon-head bolt M 8 X 16		4	SC
10	900 027 015 02	lock ring B 8		4	SC
11	900 076 025 02	hexagon nut M 8		4	SC
13	999 523 103 01	lock washer M 10		2	SC
14	A 900 031 005 02	washer		5	SC
14	900 031 005 02	washer 10,5		5	SC
15	900 157 002 02	hexagon nut M 10		3	
16	A N 012 242 3	spring washer		5	
16	N 012 242 3	spring washer B 10 X 18		5	
17	A 901 104 382 02	cylinder head nut		2	
17	901 104 382 02	cylinder head nut		2	
		- -- E N D -- -			

Model	Year	MG	SG	Illustration	Restrictions	Update	11:16	18.08.2006	PORSCHE PET PORSCHE
911	83	3	07	307-00		203			

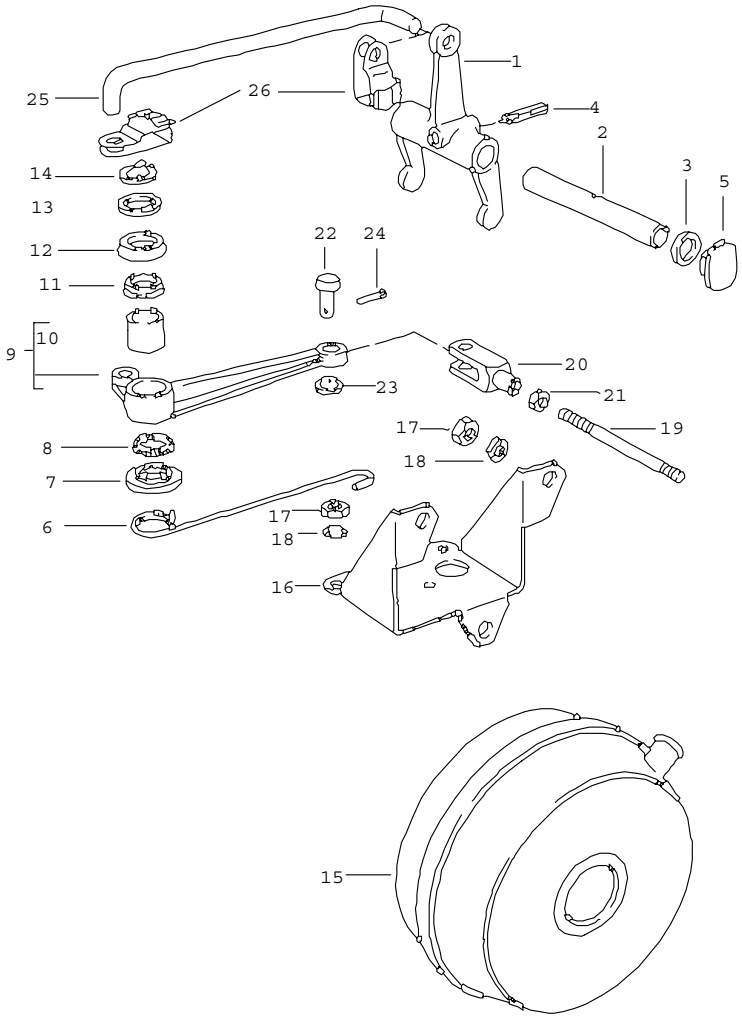

Pos	Part Number	Name	Remarks	Qty	Model
		clutch release SPM			G 925/16
1	905 116 711 01	clutch release lever		1	
2	905 116 709 00	clutch lever shaft		1	
3	905 116 712 00	spacer ring		2	
4	A 900 095 013 00	tensioning sleeve		1	
4	900 095 013 00	tensioning sleeve 4 X 20		1	
5	905 116 713 00	cap		2	
6	905 116 714 00	spring		1	
7	905 116 708 00	washer		1	
8	A 999 701 169 40	o-ring		1	
8	999 701 169 40	o-ring		1	
9	914 116 071 15	intermediate shift lever		1	
10	905 116 701 01	bush		1	
11	905 116 719 01	spacer		1	
12	999 704 019 50	sleeve T 25-1		1	
13	900 234 006 02	shim 15 X 22 X 1		1	
14	A N 012 415 1	circlip		1	
14	N 012 415 1	circlip 15 X 1		1	
15	PCG 116 721 05	servo-motor 135 X 80		1	
16	925 116 715 00	servo-motor support		1	
17	900 076 025 02	hexagon nut M 8		6	
18	900 027 015 02	lock ring A 8		6	
19	914 116 716 15	pull rod		1	
20	900 166 002 02	clevis G 6 X 24		1	

Pos	Part Number	Name	Remarks	Qty	Model	Pos	Part Number	Name	Remarks	Qty	Model
21	900 076 010 02	hexagon nut M 6		1							
22	905 116 717 00	bolt		1							
23	900 089 005 02	washer 6		1							
24	900 021 002 02	cotter pin 1,5 X 10		1							
25	925 116 751 06	push rod		1							
26	925 116 752 00	clamping spring		2							
-	N 013 295 1	tensioning sleeve		1							
-	N 013 295 1	tensioning sleeve 3 X 12		1							
		- -- E N D -- -									

Model	Year	MG	SG	Illustration	Restrictions	Update				
911	83	3	07	307-05		203	11:16	18.08.2006	PORSCHE	PET	PORSCHE

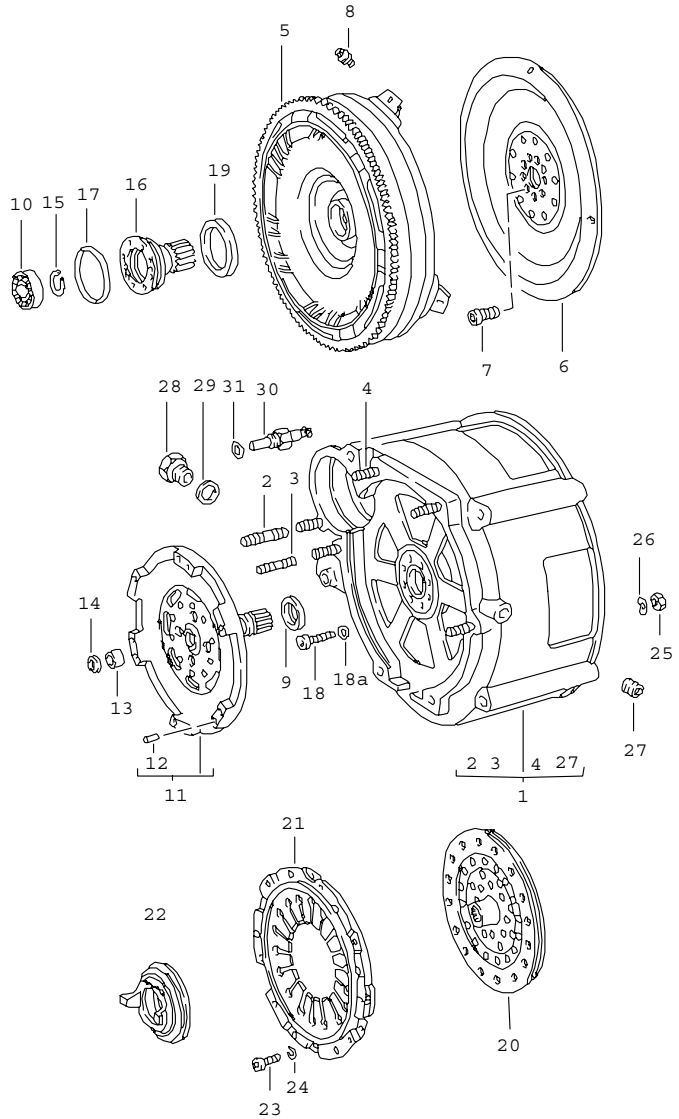

Pos	Part Number	Name	Remarks	Qty	Model
		converter converter housing SPM			G 925/16
1	925 301 007 00	converter housing with studs		1	
2	900 061 014 02	stud M 10 X 22		1	
3	A 999 062 008 02	stud		3	
3	999 062 008 02	stud M 8 X 25		3	
4	A 999 062 009 02	stud		1	
4	999 062 009 02	stud M 8 X 28		1	
5	925 116 005 10	converter with starter ring		1	
6	930 116 131 00	drive plate		1	
7	930 102 206 00	pan-head screw		9	
8	A 905 116 026 00	12 point socket		8	
8	001 301 095 A	12 point socket		8	
9	* 999 113 205 40	shaft seal 26 X 37 X 7		1	
10	900 052 095 00	deep-groove ball bearing		1	
11	925 116 027 00	turbine shaft		1	
12	999 012 018 00	straight pin		3	
13	999 201 021 00	needle sleeve		1	
14	* PCG 201 301 00	shaft seal 12 X 18 X 3		1	
15	A N 042 364 1	circlip		1	
15	N 042 364 1	circlip 20 X 1,75		1	
16	925 116 020 01	bracket		1	
17	* 999 701 397 40	o-ring OR 72 - 2,5		1	
18	999 186 002 01	pan-head screw		8	

Pos	Part Number	Name	Remarks	Qty	Model	Pos	Part Number	Name	Remarks	Qty	Model
18A	A N 013 804 2	sealing ring		8							
18A	N 013 804 2	sealing ring A 6 X 10		8							
19	999 113 189 40	shaft seal		1							
20	> 925 116 254 02	clutch plate		1							
21	925 116 255 05	clutch pressure plate		1							
22	925 116 081 00	clutch release bearing		1							
23	999 067 010 01	pan-head screw		6							
24	N 012 026 3	lock ring 6		6							
25	N 011 010 6	hexagon nut M 10		2							
26	N 012 242 3	spring washer B 10 X 18		2							
27	999 504 090 00	threaded insert heli-coil M 12 X 1,5		1							
28	925 301 115 00	screw socket		1							
29	900 123 060 30	sealing ring A 24 X 29		1							
30	905 613 102 04	temperature switch		1							
31	A 900 123 007 30	sealing ring		1							
31	900 123 007 30	sealing ring A 14 X 18		1							
-	900 124 002 02	screw plug		1							
		- -- E N D -- -									

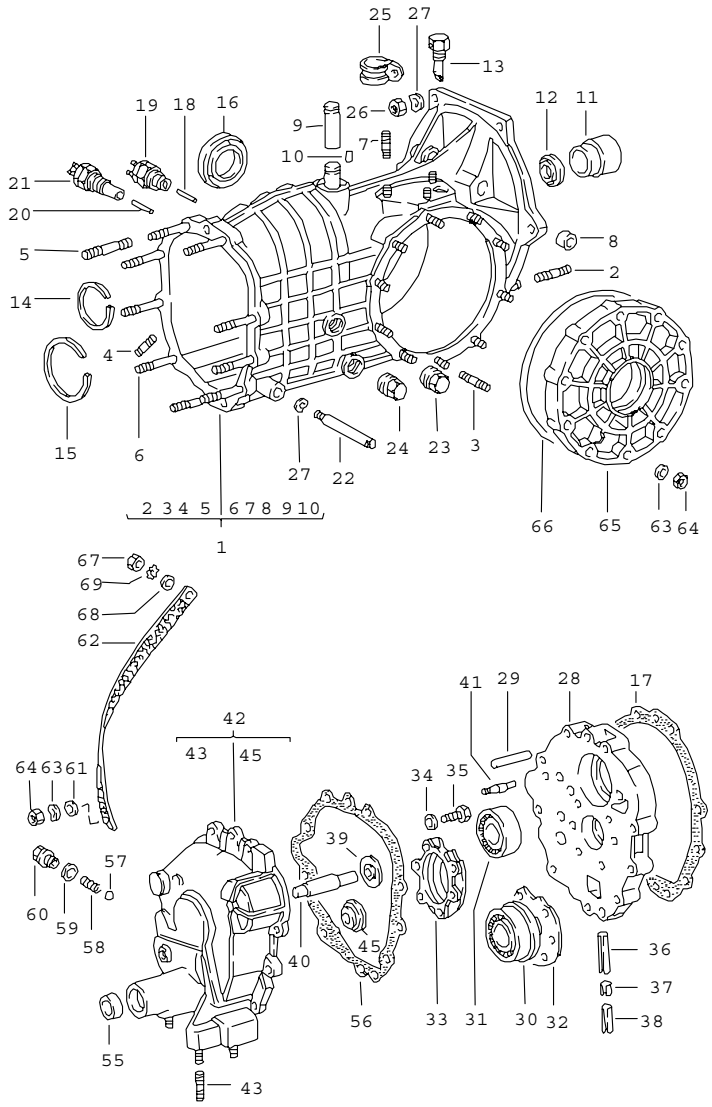

Pos	Part Number	Name	Remarks	Qty	Model
		replacement transmission transmission case SPM			G 925/16
-	925 300 010 16	replacement transmission with converter ready for installation		1	
1	925 301 010 10	transmission case		1	
2	900 061 118 02	stud M 10 X 28		2	
3	A 999 062 008 02	stud		10	
3	999 062 008 02	stud M 8 X 25		10	
4	A 900 061 057 02	stud		2	
4	999 062 073 02	stud M 8 X 15		2	
5	900 061 070 02	stud M 8 X 55		8	
6	900 061 050 02	stud M 8 X 60		1	
7	900 061 004 02	stud M 8 X 12		3	
8	905 116 727 00	bush		2	
9	905 116 707 01	pin		1	
10	900 309 017 00	roll pin 5 X 12		1	
11	905 116 813 01	guide tube		1	
12	A 999 113 286 40	shaft seal	-79	1	
12	* 999 113 286 40	shaft seal		1	
13	904 301 071 00	bleeder		1	
14	999 042 301 01	snap ring SB 52		3	
15	999 041 305 01	snap ring SB 79		1	
16	A 999 113 183 40	radial shaft seal		2	
16	999 113 183 40	radial shaft seal 45 X 68 X 10		2	

Pos	Part Number	Name	Remarks	Qty	Model
17	* 925 301 191 00	gasket 0,10 MM		X	
(17)	* 925 301 191 01	gasket 0,15 MM		X	
(17)	* 925 301 191 02	gasket 0,20 MM		X	
18	905 303 245 02	cam follower		1	
19	905 613 051 02	back-up light switch		1	
20	914 303 246 10	cam follower bridging switch		1	
21	905 613 101 02	bridging switch		1	
22	914 301 307 00	bolt reverse lever		1	
23	999 064 019 02	screw plug		1	
24	A 999 064 020 02	screw plug		1	
24	999 064 020 02	screw plug with magnet		1	
25	A N 020 607 1	clamp		1	
25	N 020 607 1	clamp		1	
26	999 090 101 02	mid-grip nut		4	
27	A 900 031 001 02	washer		5	
27	900 025 007 02	washer 8,4		5	
28	925 301 221 00	intermediate plate		1	
29	900 012 027 00	straight pin 10 M 6 X 40		2	
30	999 052 016 00	four-point bearing		1	
31	900 052 006 00	deep-groove ball bearing		1	
32	925 301 255 00	plate		1	
33	925 301 035 00	tensioning plate		1	
34	A 900 025 007 02	washer		6	
34	900 025 007 02	washer 8,4		6	
35	A 900 075 083 02	hexagon-head bolt		6	
35	900 075 029 09	hexagon-head bolt M 8 X 25		6	
36	901 303 241 01	bush		1	
37	905 303 242 00	bush		1	
38	905 303 243 00	bush		1	
38	905 303 243 00	bush		1	
39	925 302 291 00	thrust washer		1	
40	925 302 255 00	bolt		1	
41	925 303 136 00	bolt		1	
42	925 301 903 00	transmission cover		1	
43	A 999 062 006 02	stud		4	
43	999 062 006 02	stud M 8 X 20		4	
45	925 302 292 00	thrust washer		1	
55	* 999 113 185 40	shaft seal 15 X 24 X 7		1	
56	* 925 301 392 00	gasket		1	
57	A N 025 667 2	ball		1	
57	N 025 667 2	ball 9 MM V		1	
58	905 303 237 00	spring		1	
59	A 900 123 007 30	sealing ring		1	
59	900 123 007 30	sealing ring A 14 X 18		1	
60	925 303 238 00	screw plug		1	
61	999 151 022 02	washer 20 X 8,4 X 2		2	
62	999 611 918 20	ground strap		1	
63	N 012 241 8	spring washer		19	
64	900 076 025 02	hexagon nut M 8		19	
65	925 301 311 01	transmission cover		1	

Pos	Part Number	Name	Remarks	Qty	Model
66	* 999 701 376 40	o-ring 170 X 3,5		1	
67	900 076 030 02	hexagon nut M 8		1	
68	900 025 007 02	washer 8,4		1	
69	A N 012 132 2	shake-proof washer		1	
69	N 012 132 2	shake-proof washer A 8,4		1	
-	915 301 369 00	clip		1	
		- -- E N D -- -			

Model	Year	MG	SG	Illustration	Restrictions	Update			
911	83	3	09	309-00		203	11:17	18.08.2006	PORSCHE PET PORSCHE

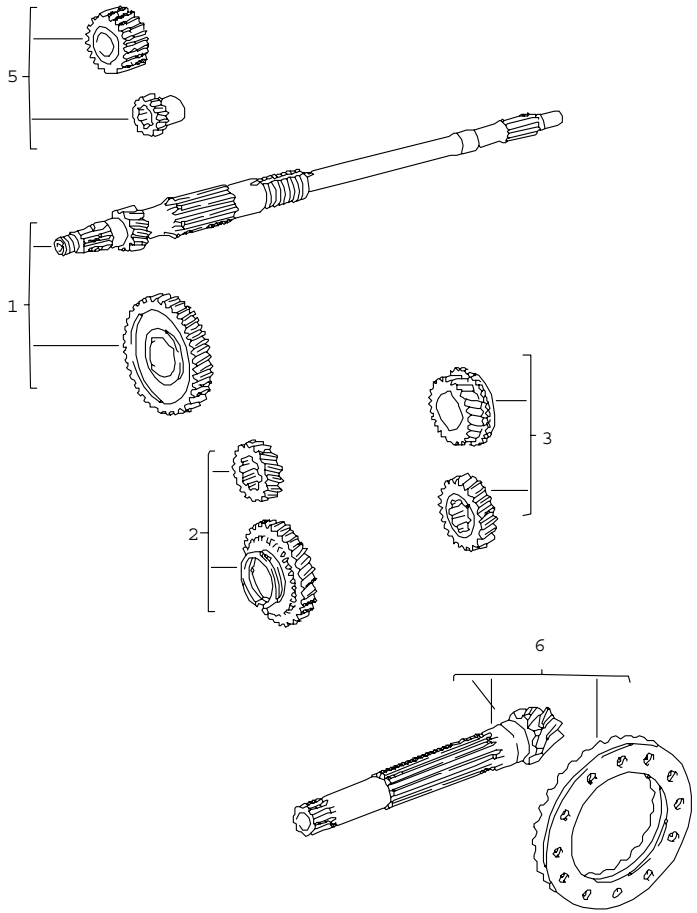

Pos	Part Number	Name	Remarks	Qty	Model
		gear sets SPM			G 925/16
1	925 302 901 03	gear set 1. speed Z = 15:36 (C)		1	
2	925 302 902 15	gear set 2. speed Z = 21:30 (K)		1	
3	925 302 903 50	gear set 3. speed Z = 27:25 (V)		1	
5	925 302 912 00	gear set reverse gear		1	
(6)	925 302 911 11	ring gear and pinion shaft 8:27		1	
		- -- E N D -- -			

Model	Year	MG	SG	Illustration	Restrictions	Update	11:17	18.08.2006	PORSCHE	PET	PORSCHE
911	83	3	09	309-05		203					

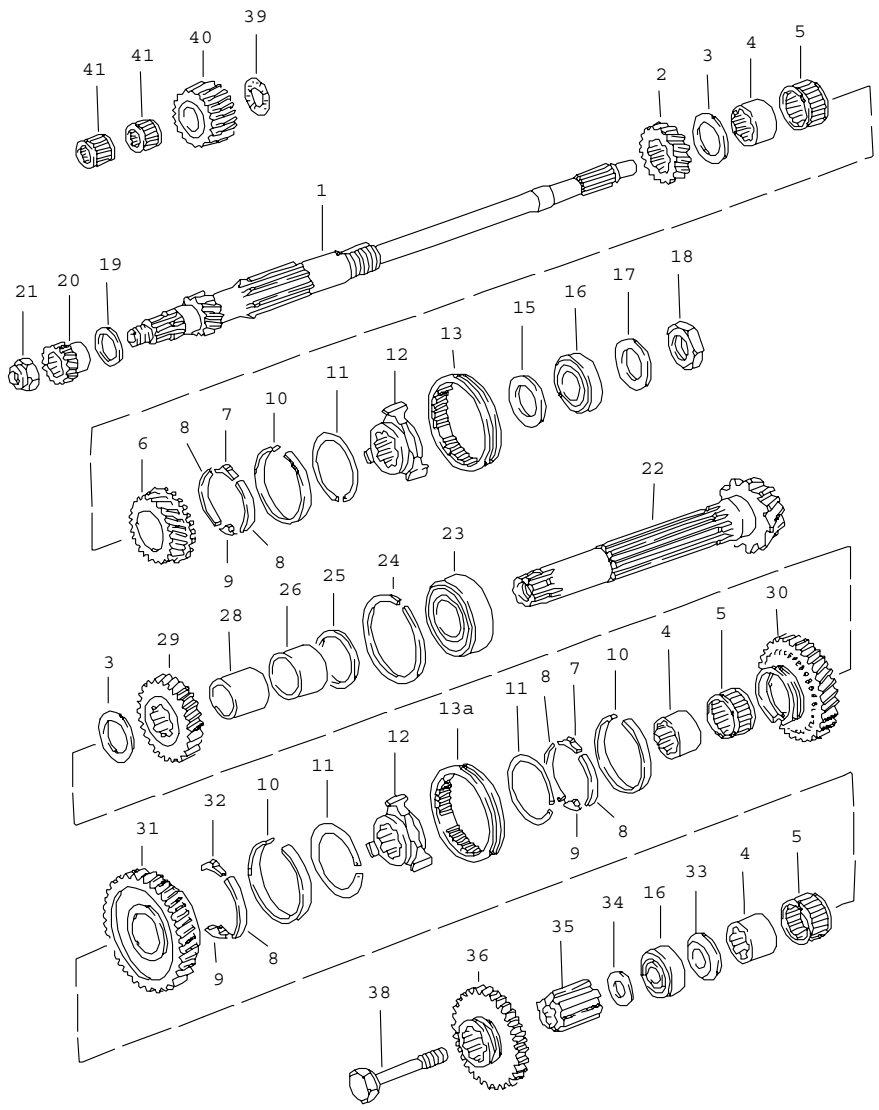

Pos	Part Number	Name	Remarks	Qty	Model
		gears and shafts SPM gear sets see group 3/09/00			G 925/16
1	* -	drive shaft		1	
-	925 302 267 00	spacer sleeve		1	
2	* -	fixed gear wheel 2. speed		1	
3	925 302 294 10	thrust washer		2	
4	915 302 262 00	bush		3	
5	999 201 470 00	needle cage		3	
6	* -	loose gear wheel 3. speed		1	
7	911 302 315 00	stone 2./3. speed		2	
8	A 911 302 316 00	brake band		5	
8	911 302 316 08	brake band		5	
9	A 911 302 317 01	stop		3	
9	911 302 317 01	stop		3	
10	925 302 301 02	synchroniser ring		3	
11	911 302 311 01	circlip		3	
12	911 302 402 20	guide sleeve		2	
13	911 302 411 20	shift sleeve 3. speed		1	
13A	911 302 411 24	shift sleeve 1./2. speed		1	
-	925 302 263 10	spacer sleeve		1	
15	925 302 264 10	washer		1	
16	999 110 008 00	cylindrical-roller bearing		2	
16	999 110 008 00	cylindrical-roller bearing		2	

Pos	Part Number	Name	Remarks	Qty	Model
17	999 038 001 00	tab washer		1	
18	999 183 001 00	hexagon nut		1	
19	925 302 259 10	spacer ring		1	
20	* -	reverse gear wheel		1	
21	925 302 283 00	collar nut		1	
22	* -	pinion shaft		1	
23	A 999 110 007 00	cylindrical-roller bearing		1	
23	999 110 012 00	bearing		1	
24	900 111 002 00	snap ring SP 72		1	
25	901 302 297 01	adjusting shim 0,25 MM		X	
(25)	901 302 297 11	adjusting shim 0,30 MM		X	
(25)	901 302 297 21	adjusting shim 0,40 MM		X	
26	925 302 266 10	spacer sleeve		1	
28	901 302 265 01	spacer sleeve		1	
29	* -	fixed gear wheel 3. speed		1	
30	* -	loose gear wheel 2. speed		1	
31	* -	loose gear wheel 1. speed		1	
32	901 302 318 02	stone 1. speed		1	
33	901 302 268 01	spacer		1	
34	925 302 281 00	spacer		1	
35	925 302 257 00	sleeve		1	
36	925 302 224 00	sliding gear reverse gear		1	
38	925 302 271 00	elastic bolt		1	
39	999 202 001 00	axial needle bearing cage		1	
40	* -	reverse idler gear		1	
41	999 201 106 00	needle cage		2	
		- -- E N D -- -			

Model	Year	MG	SG	Illustration	Restrictions	Update	11:17	18.08.2006	PORSCHE PET PORSCHE
911	83	3	10	310-00		203			

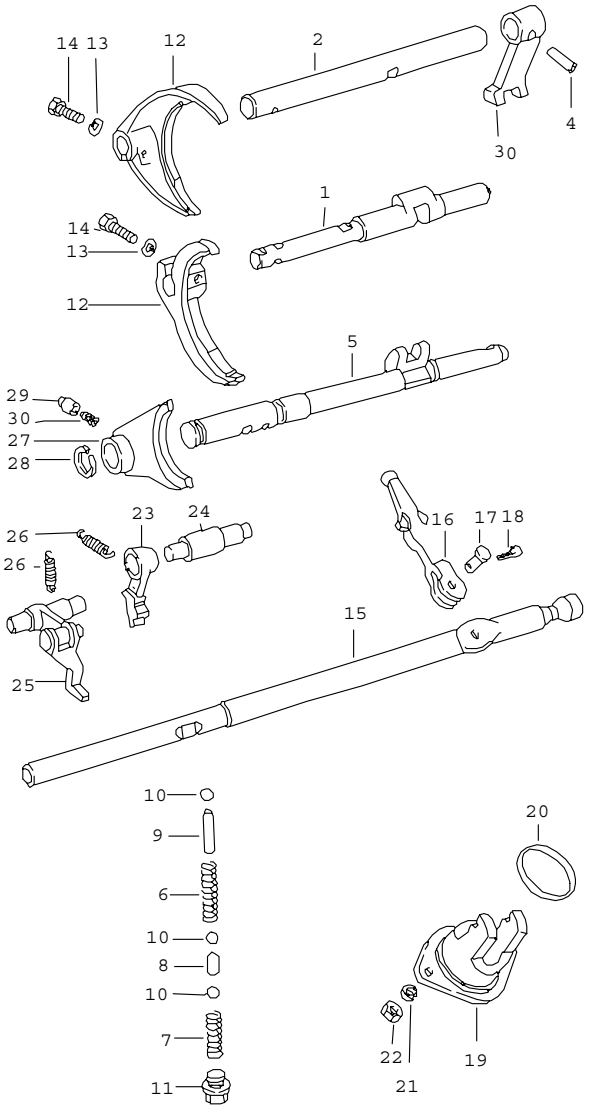

Pos	Part Number	Name	Remarks	Qty	Model
		shift rods forks SPM			G 925/16
1	901 303 101 01	gear shift rod 1./2. speed		1	
2	925 303 103 00	gear shift rod 3. speed		1	
-	A 900 041 023 01	circlip		1	
-	900 041 023 01	circlip 14 X 1		1	
3	925 303 161 00	contact		1	
4	900 309 003 00	roll pin 5 X 24		1	
5	925 303 141 01	gear shift rod reverse gear		1	
6	901 303 232 01	compression spring		1	
7	905 303 232 01	compression spring		1	
8	905 303 211 00	detent		1	
9	901 303 271 01	pin		1	
10	A N 025 667 2	ball		3	
10	N 025 667 2	ball 9 MM V		3	
11	999 065 004 02	screw plug		1	
12	901 303 111 01	shift fork		2	
13	N 012 241 1	spring washer B 8 X 15		2	
14	900 075 083 02	hexagon-head bolt		2	
14	900 075 029 09	hexagon-head bolt M 8 X 25		2	
15	905 303 132 20	gear shift rod		1	
16	901 303 133 01	shift lever		1	
17	901 303 171 01	bolt		1	
18	A N 012 512 1	cotter pin		1	

Pos	Part Number	Name	Remarks	Qty	Model
18	N 012 512 1	cotter pin 2 X 12		1	
19	925 303 129 11	fork		1	
20	* 999 701 359 40	o-ring OR 40 X 1,5		1	
21	A 900 027 015 02	lock ring		2	
21	900 027 015 02	lock ring B 8		2	
22	900 076 025 02	hexagon nut M 8		2	
23	925 303 137 01	stop		1	
24	925 303 138 00	shaft		1	
25	925 303 015 02	lever		1	
26	905 303 235 00	tension spring		2	
27	925 303 151 00	shift fork		1	
-	999 152 023 01	snap ring SB 22		1	
28	999 041 301 01	snap ring SW 18		1	
29	925 303 149 01	locking bolt		1	
30	925 303 148 01	spring		1	
		- -- E N D -- -			

Pos	Part Number	Name	Remarks	Qty	Model

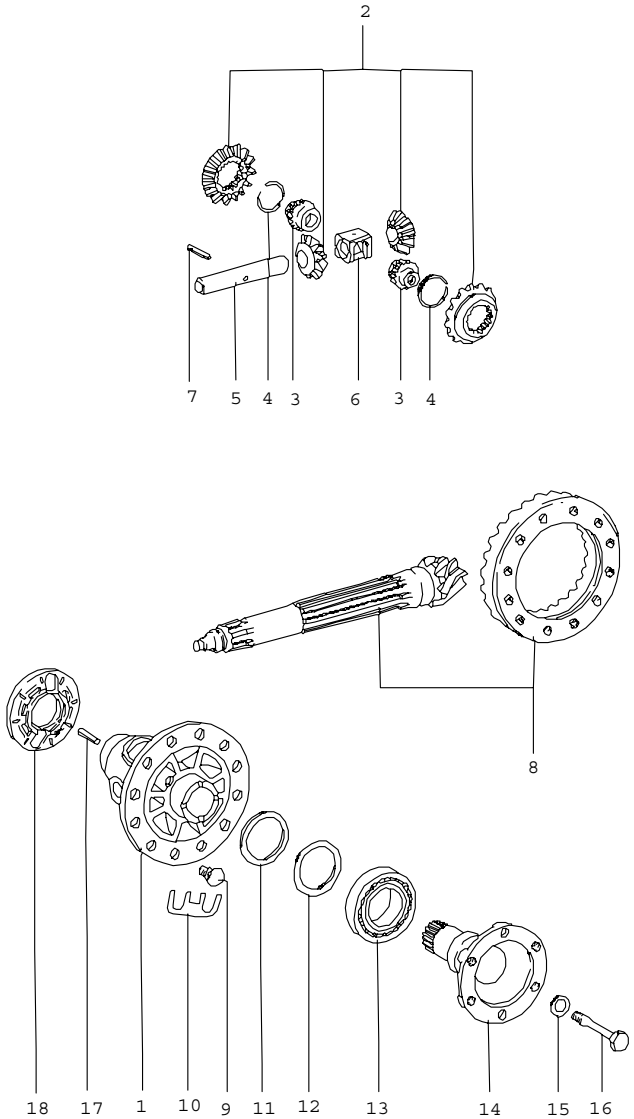

Pos	Part Number	Name	Remarks	Qty	Model
		differential SPM			G 925/16
1	925 332 212 01	housing		1	
2	911 332 902 00	differential pinions 1 set		1	
3	911 332 206 01	threaded piece		2	
4	999 152 014 00	snap ring		2	
5	911 332 207 00	differential bolt		1	
6	911 332 208 00	armature		1	
7	900 308 005 00	roll pin		1	
8	925 302 911 11	ring gear and pinion shaft 8 : 27		1	
9	915 332 276 00	hexagon-head bolt		12	
10	901 332 285 01	tab washer		6	
11	915 332 265 00	adjusting ring 2,4 MM		X	
(11)	915 332 265 01	adjusting ring 2,5 MM		X	
(11)	915 332 265 02	adjusting ring 2,6 MM		X	
(11)	915 332 265 03	adjusting ring 2,7 MM		X	
(11)	915 332 265 04	adjusting ring 2,8 MM		X	
(11)	915 332 265 05	adjusting ring 2,9 MM		X	
(11)	915 332 265 06	adjusting ring 3,0 MM		X	
(11)	915 332 265 07	adjusting ring 3,1 MM		X	
(11)	915 332 265 08	adjusting ring 3,2 MM		X	
(11)	915 332 265 09	adjusting ring 3,3 MM		X	
(11)	915 332 265 10	adjusting ring 3,4 MM		X	

Pos	Part Number	Name	Remarks	Qty	Model	Pos	Part Number	Name	Remarks	Qty	Model
(11)	915 332 265 11	adjusting ring 3,5 MM		X							
(11)	915 332 265 12	adjusting ring 3,6 MM		X							
(11)	915 332 265 13	adjusting ring 3,7 MM		X							
12	915 332 263 00	washer		2							
13	999 059 027 00	taper roller bearing		2							
14	925 332 209 04	joint flange		2							
15	901 332 261 11	washer		2							
16	901 332 275 12	elastic bolt		2							
17	900 095 078 00	tensioning sleeve		1							
18	915 318 045 03	magnet carrier disc		1							
		- -- E N D -- -									

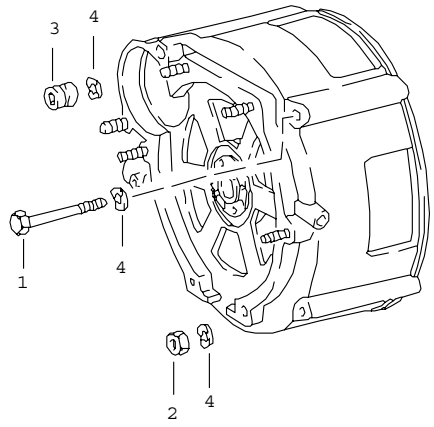

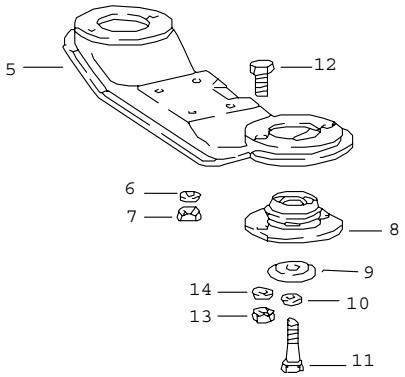

Pos	Part Number	Name	Remarks	Qty	Model
		transmission suspension SPM			G 925/16
1	900 155 018 02	hexagon-head bolt M 10 X 110		1	
2	900 157 002 02	hexagon nut M 10		2	
3	A 901 104 382 02	cylinder head nut		2	
3	901 104 382 02	cylinder head nut		2	
4	N 012 242 3	spring washer B 10 X 18		5	
5	911 375 033 01	transmission carrier		1	
6	A 900 031 001 02	washer		4	
6	900 025 007 02	washer 8,4		4	
7	999 090 101 02	mid-grip nut		4	
8	911 375 043 00	bearing		2	
9	901 305 311 00	seat		2	
10	900 027 017 02	lock ring B 12		2	
11	901 305 317 00	hexagon-head bolt		2	
11	930 375 317 00	hexagon-head bolt use also:		2	
-	999 025 074 02	washer		2	
12	900 075 087 02	hexagon-head bolt		4	
12	900 075 087 02	hexagon-head bolt M 8 X 16		4	
13	900 076 025 02	hexagon nut M 8		4	
14	A 900 027 015 02	lock ring		4	
14	900 027 015 02	lock ring B 8		4	
		- -- E N D -- -			

Model	Year	MG	SG	Illustration	Restrictions	Update		
911	83	3	98	398-00		203	11:18	18.08.2006

Pos	Part Number	Name	Remarks	Qty	Model
		set of seals			
>>	> 915 300 911 00	set of seals for transmission comprising:		1	G 915
-	915 301 139 00	sealing ring		1	
-	999 113 183 40	radial shaft seal 45 X 68 X 10		2	
-	999 113 182 40	shaft seal 23 X 40 X 10		1	
-	999 113 327 40	shaft seal 23 X 35 X 8/11		1	
-	999 701 392 40	o-ring OR 195 X 3,5		1	
-	915 301 191 00	gasket		1	
-	900 123 066 30	sealing ring A 10 X 16		2	
-	999 113 185 40	shaft seal 15 X 24 X 7		1	
-	999 701 349 40	o-ring 17,5 X 2,4		1	
-	999 113 175 40	shaft seal 6 X 15 X 6		1	
-	915 301 351 00	gasket		1	
-	999 701 169 40	o-ring 14,3 X 2,4		1	
-	915 303 225 00	gasket		1	
>>	> 930 300 911 00	set of seals for transmission comprising:		1	G 930/34
-	915 301 139 00	sealing ring		1	
-	999 113 183 40	radial shaft seal		2	
-	999 701 437 40	o-ring		1	
-	930 302 332 00	shaft seal		1	
-	999 701 440 40	o-ring		1	
-	930 301 191 00	gasket		1	
-	999 113 185 40	shaft seal		1	

Model	Year	MG	SG	Illustration	Restrictions	Update		
911	83	3	98	398-00		203	11:18	18.08.2006

Pos	Part Number	Name	Remarks	Qty	Model
-	930 301 351 00	gasket		1	
-	915 303 225 00	gasket		1	
>>	> 925 300 911 00	set of seals for transmission comprising:		1	G 925/16
-	999 113 205 40	shaft seal 26 X 37 X 7		1	
-	PCG 201 301 00	shaft seal 12 X 18 X 3		1	
-	999 701 397 40	o-ring 72 X 2,5		1	
-	N 013 804 2	sealing ring A 6 X 10		8	
-	999 113 189 40	shaft seal		1	
-	900 123 060 30	sealing ring A 24 X 29		1	
-	900 123 007 30	sealing ring A 14 X 18		2	
-	999 113 286 40	shaft seal		1	
-	999 113 183 40	radial shaft seal 45 X 68 X 10		2	
-	925 301 191 00	gasket 0,10 MM		1	
-	925 301 191 01	gasket 0,15 MM		1	
-	925 301 191 02	gasket 0,20 MM		1	
-	999 113 175 40	shaft seal 6 X 15 X 6		1	
-	999 701 084 50	o-ring 25,3 X 2,4		1	
-	999 113 185 40	shaft seal 15 X 24 X 7		1	
-	925 301 392 00	gasket		1	
-	900 123 007 30	sealing ring 14 X 18		1	
-	999 701 376 40	o-ring 170 X 3,5		1	

Model	Year	MG	SG	Illustration	Restrictions	Update		
911	83	3	98	398-00		203	11:18	18.08.2006

Pos	Part Number	Name	Remarks	Qty	Model
-	999 701 359 40	o-ring 40 X 1,5		1	
-	915 116 911 00	repair kit clutch comprising: pressure plate clutch plate clutch release bearing		1 1 1 1	SC
-	930 116 911 00	repair kit clutch comprising: pressure plate clutch plate clutch release bearing		1	TURBO
		- -- E N D -- -			

Model	Year	MG	SG	Illustration	Restrictions	Update	11:18	18.08.2006	PORSCHE PET PORSCHE
911	83	4	01	401-00		203			

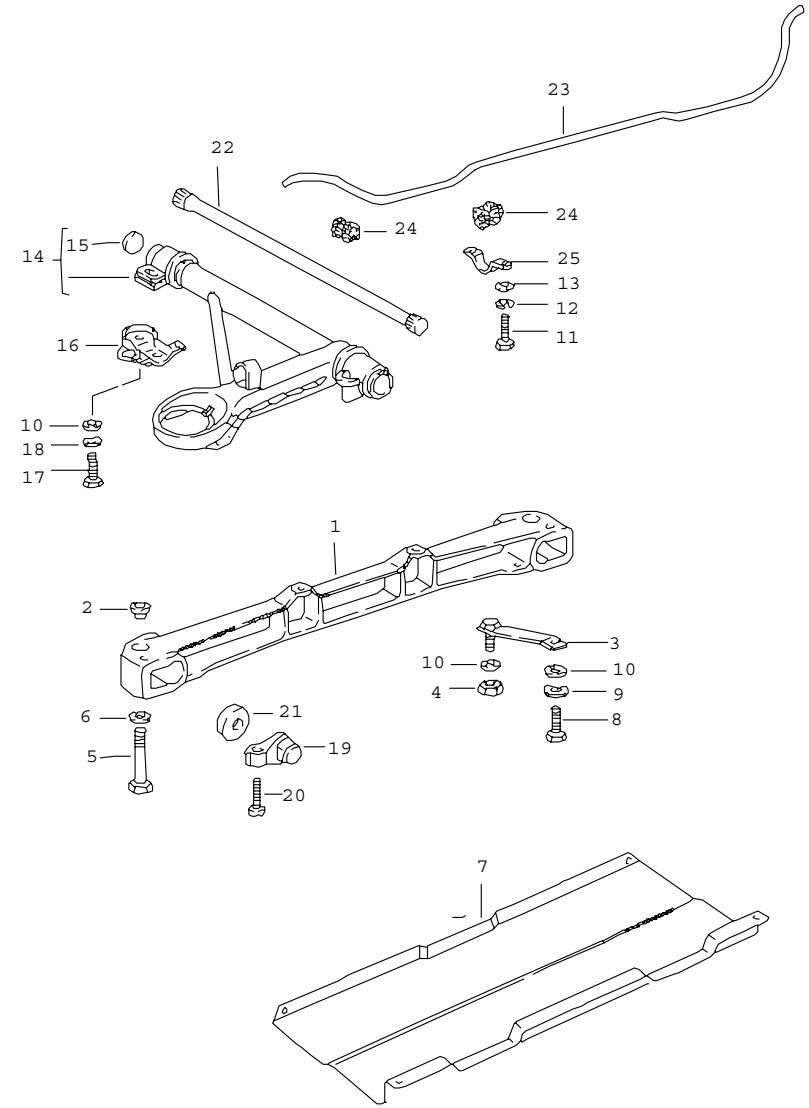

Pos	Part Number	Name	Remarks	Qty	Model
		front axle stabiliser			
1	911 341 013 10	auxiliary support		1	
2	930 341 135 00	adapter		2	TURBO
3	930 341 031 02	strut		2	TURBO
3	911 341 031 01	strut		2	SC
4	900 910 031 09	lock nut		2	
5	A 900 082 110 02	hexagon-head bolt M 12 X 1,5 X 85		2	
5	900 082 110 02	hexagon-head bolt M 12 X 1,5 X 85		2	
6	900 028 014 02	spring washer B 12		2	
7	930 341 021 02	protective plate		1	TURBO
7	911 341 161 04	protective plate		1	SC
8	N 014 721 2	pan-head screw M 10 X 25		2	
9	A N 012 028 1	lock ring 10		2	
9	N 012 028 1	lock ring B 10		2	
10	900 025 008 09	washer 10,5		8	
11	900 075 087 02	hexagon-head bolt M 8 X 16		2	TURBO
12	A 900 027 015 02	lock ring B 8		2	TURBO
12	900 027 015 02	lock ring B 8		2	TURBO
13	900 025 007 02	washer 8,4		2	TURBO
14	911 341 901 01	control arm	/L	1	SC
14	911 341 902 01	control arm	/R	1	SC
14	930 341 901 01	control arm	/L	1	TURBO
14	930 341 902 01	control arm	/R	1	TURBO

Pos	Part Number	Name	Remarks	Qty	Model
15	900 040 008 01	cover plate		2	
16	911 341 037 02	protective bracket	/L	1	
16	911 341 038 02	protective bracket	/R	1	
17	N 010 275 3	hexagon-head bolt M 10 X 35		6	SC
17	N 040 281 1	hexagon-head bolt M 10 X 45		6	TURBO
18	A 900 027 016 02	lock ring B 10		6	
18	900 027 016 02	lock ring B 10		6	
19	901 341 033 00	reverse lever		2	
20	911 341 115 00	adjusting screw		2	
21	901 341 475 00	gasket		2	
22	901 343 101 12	torsion bar	/L	1	
22	901 343 102 12	torsion bar	/R	1	
23	911 343 703 10	stabiliser 20 $		1	
24	911 343 792 03	rubber mounting 20 $		4	
25	911 343 775 00	clip		2	
		- -- E N D -- -			

Pos	Part Number	Name	Remarks	Qty	Model

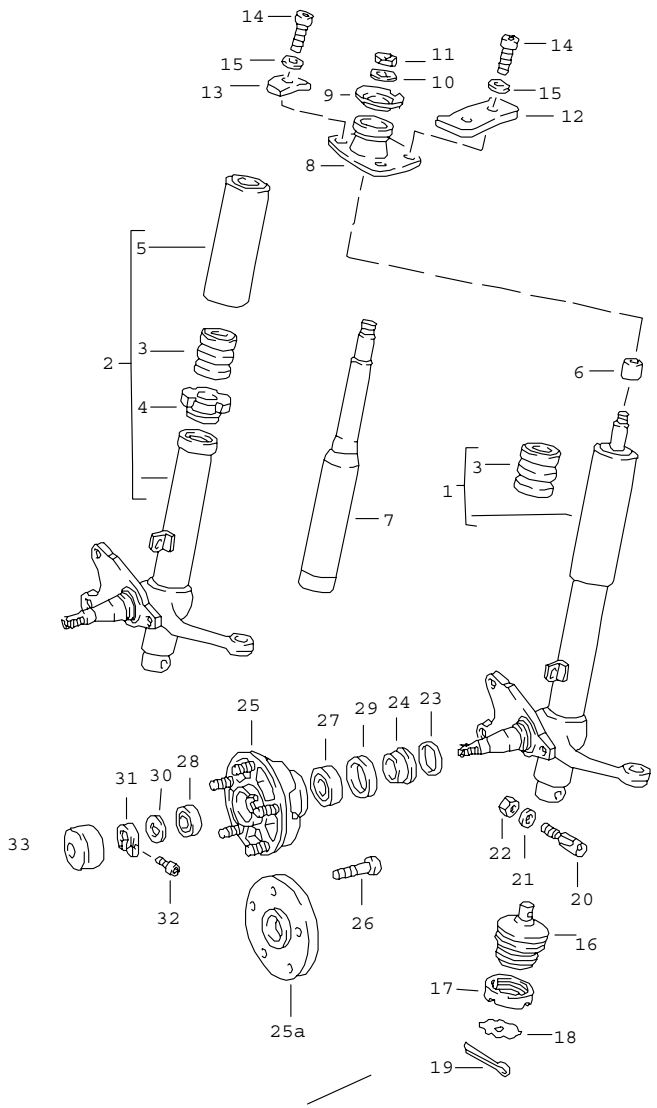

Pos	Part Number	Name	Remarks	Qty	Model
		shock absorber strut			
1	911 341 041 33	shock absorber strut - bilstein -	/L	1	
(1)	911 341 042 33	shock absorber strut - bilstein -	/R	1	
2	911 341 043 02	shock absorber strut outer part - boge -	/L	1	
2	911 341 044 02	shock absorber strut outer part - boge -	/R	1	
3	901 343 301 00	rubber stop - boge -		2	SC
4	911 341 804 00	screw plug - boge -		2	SC
5	911 341 805 01	protective tube - boge -		2	SC
6	911 341 615 00	spacer	-82	2	
7	911 341 913 03	repair set - boge -		2	SC
8	911 341 018 00	supporting mount		2	
9	901 341 629 00	support washer		2	
10	900 038 002 01	tab washer 14		2	
11	N 011 021 3	hexagon nut M 14 X 1,5		2	
12	911 501 933 00	pressure plate		2	
13	911 501 934 00	pressure plate		2	
14	900 067 063 02	pan-head screw M 10 X 20		6	
15	999 523 103 01	lock washer		6	
16	911 341 049 01	ball joint		2	
17	901 341 425 00	grooved nut		2	
18	901 341 426 00	tab washer		2	
19	A N 012 521 1	cotter pin		2	
19	N 012 521 1	cotter pin		2	

Pos	Part Number	Name	Remarks	Qty	Model
20	911 341 119 06	threaded pin		2	
21	900 089 006 02	washer 8		2	
22	999 084 019 02	lock nut		2	
23	999 701 084 50	o-ring OR 25,3 - 2,4		2	
24	901 341 623 00	spacer ring		2	
25	911 341 065 06	front wheel hub		2	SC
25	930 341 065 00	front wheel hub	-80	2	TURBO
25	930 341 065 01	front wheel hub	81-	2	TURBO
25A	477 501 701	spacer tube	-80	2	TURBO
26	911 331 671 00	wheel bolt		10	TURBO
26	904 341 671 00	wheel bolt		10	SC
26	904 341 671 00	wheel bolt oversize		X	
27	999 059 098 00	taper roller bearing		2	
28	999 059 065 00	taper roller bearing		2	
29	477 405 641	radial sealing ring		2	
30	911 341 663 00	thrust washer		2	
31	911 341 673 00	clamping nut		2	
32	999 119 001 01	pan-head screw		2	
33	911 341 684 00	cap		2	SC
33	911 341 684 00	cap	-80	2	TURBO
33	A 930 341 066 01	cap	81-	2	
33	930 341 066 01	cap	81-	2	TURBO
		- -- E N D -- -			

Pos	Part Number	Name	Remarks	Qty	Model

Model	Year	MG	SG	Illustration	Restrictions	Update	11:18	18.08.2006	PORSCHE PET PORSCHE
911	83	4	03	403-00		203			

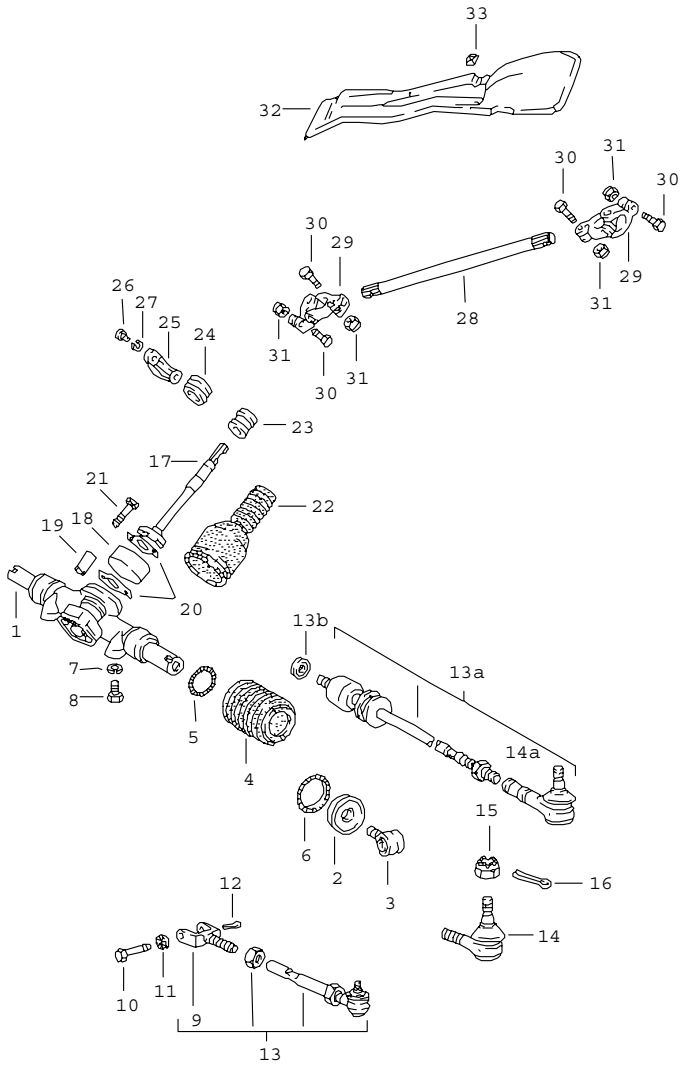

Pos	Part Number	Name	Remarks	Qty	Model
		steering accessories lower			
1	914 347 010 06	steering gear		1	SC
(1)	930 347 010 00	steering gear		1	TURBO
2	911 347 056 00	support		2	SC
3	914 347 057 00	bush		2	SC
4	901 347 191 02	bellows		2	SC
4	930 347 191 02	bellows		2	TURBO
5	901 347 308 00	retainer spring		2	SC
6	901 347 309 00	retainer spring		2	SC
7	A 900 027 016 02	lock ring B 10		2	SC
7	900 027 016 02	lock ring B 10		2	SC
7	900 028 032 02	spring washer B 10		2	TURBO
(7)	900 025 008 09	washer B 10		2	TURBO
8	A N 010 275 3	hexagon-head bolt M 10 X 35		2	SC
8	N 010 275 3	hexagon-head bolt M 10 X 35 F >>91182 11528 F >>91182 01444 F >>91183 09716 F >>91183 01515 F >>91183 11134		2	SC
8	900 075 071 07	hexagon-head bolt M 10 X 45 F 91182 11529>> F 91182 01445>> F 91183 09717>> F 91183 01516>> F 91183 11135>>		2	SC
8	N 010 275 3	hexagon-head bolt M 10 X 35		2	TURBO
9	901 347 315 01	joint fork		2	SC
10	911 347 327 00	hexagon-head bolt		2	SC

Pos	Part Number	Name	Remarks	Qty	Model
11	999 523 103 01	lock washer M 10		2	SC
12	900 021 008 00	cotter pin 2 X 15		2	SC
13	911 347 031 00	tie rod		2	SC
13A	930 347 031 01	tie rod		2	TURBO
13B	930 347 313 01	washer		2	TURBO
14	911 347 322 04	ball joint		2	SC
14A	930 347 322 00	ball joint		2	TURBO
15	N 011 210 1	castle nut M 10 X 1		2	
16	900 021 013 00	cotter pin 2 X 25		2	
17	901 347 210 03	steering shaft		1	
18	901 347 201 02	steering coupling		1	
19	901 347 215 00	stop bush		2	
20	901 347 248 00	tab washer		1	
21	A N 010 353 3	hexagon-head bolt M 8 X 42		2	
21	N 010 353 3	hexagon-head bolt M 8 X 42		2	
22	901 347 393 01	sealing bellows		1	
23	911 347 041 00	steering shaft bearing		1	
-	911 347 029 00	needle-roller bearing		1	
24	901 347 223 03	rubber mounting		1	
25	901 347 221 00	housing		1	
26	900 186 002 02	pan-head screw M 8 X 15		2	
27	900 142 002 01	lock ring 8		2	
28	911 347 211 01	intermed. steering shaft	/LL	1	
29	A 930 347 025 00	universal joint		2	
29	930 347 025 00	universal joint		2	
30	A N 010 335 5	hexagon-head bolt		4	
30	N 010 335 5	hexagon-head bolt M 8 X 35		4	
31	N 021 194 1	lock nut M 8		4	
32	901 347 067 00	cover	/LL	1	
33	999 507 209 01	speed nut		2	
		- -- E N D -- -			

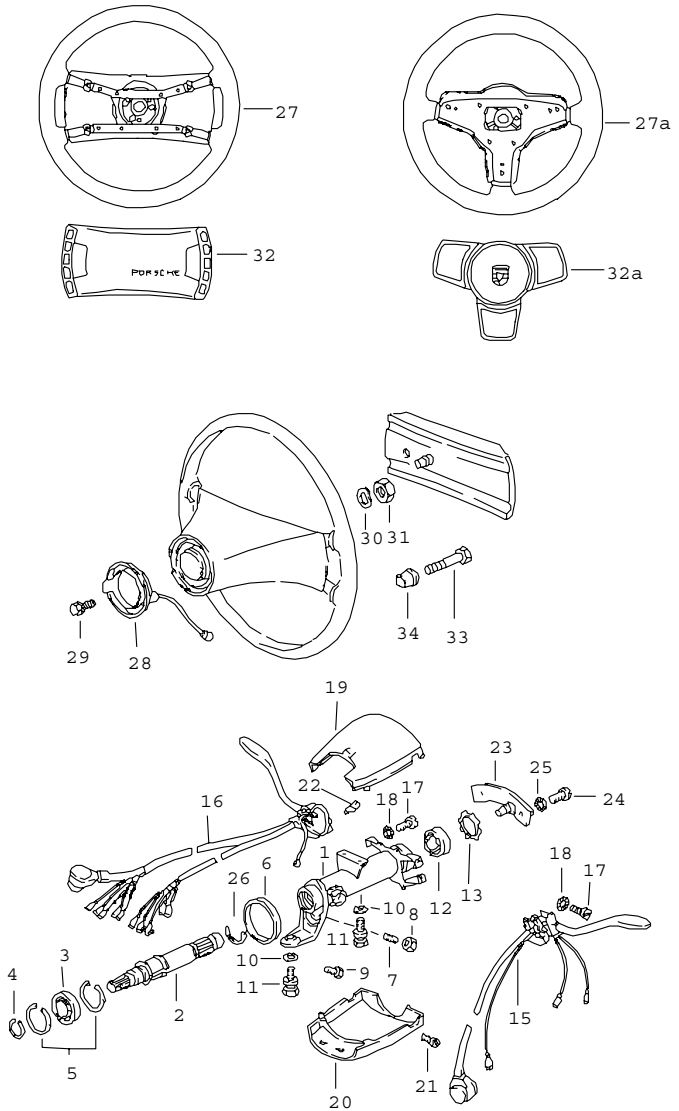

Pos	Part Number	Name	Remarks	Qty	Model
		steering accessories upper			
1	911 347 073 03	steering outer tube	/LL	1	
2	911 347 061 02	steering shaft		1	
3	900 052 031 00	deep-groove ball bearing		1	
4	900 041 008 00	circlip 17 X 1		1	
5	900 042 008 00	circlip 35 X 1,5		2	
6	911 347 713 00	gasket		1	
7	900 228 002 02	threaded pin M 8 X 16	/LL	1	
8	900 076 025 02	hexagon nut M 8	/LL	1	
10	N 012 241 8	spring washer B 8		3	
11	901 347 753 00	shear bolt		3	
12	911 347 771 02	ball bearing		1	
13	999 041 102 01	circlip		1	
15	-	direction indicator switch SIEHE 9/03/10			
16	-	wiper switch SIEHE 9/03/10			
17	900 014 069 02	pan-head screw AM 3 X 8		8	
18	900 115 007 01	serrated lock washer A 3,2		8	
19	911 613 099 00	switch housing		1	
20	911 613 312 00	switch housing		1	
21	900 014 079 02	pan-head screw AM 3 X 10		2	
22	999 652 315 02	flat plug		1	
23	911 613 521 00	wiper contact		1	
24	900 014 046 02	pan-head screw M 4 X 10		2	

Pos	Part Number	Name	Remarks	Qty	Model
25	N 012 116 1	serrated lock washer A 4,3		2	
26	113 415 531	snap ring		1	
27	911 347 083 00	safety steering wheel 400 $	-79	1	SC
27	911 347 083 70	safety steering wheel leather	-79	1	SC
27A	911 347 084 02	sports steering wheel		1	
	1AJ	black			
	2LB	burgundy			M 403
27A	911 347 084 07	steering wheel		1	M 018
	1AJ	black			
28	911 347 099 05	slip ring		1	
29	A 900 146 029 02	oval-head screw AM 3,5 X 10		7	
29	113 415 869	oval-head screw AM 3,5 X 10		7	
30	N 012 239 1	spring washer B 18		1	
31	900 078 007 02	hexagon nut M 18 X 1,5		1	
32	911 347 097 00	pad for horn	-79	1	SC
	70B	black			
32A	911 347 859 00	pad for horn		1	
	70B	black			
	2LB	burgundy			M 403
33	N 010 261 3	hexagon-head bolt M 4 X 16		X	
34	321 419 779	insulating bush		X	
		- -- E N D -- -			

Pos	Part Number	Name	Remarks	Qty	Model

Model	Year	MG	SG	Illustration	Restrictions	Update	11:19	18.08.2006	PORSCHE PET PORSCHE
911	83	5	01	501-00		203			

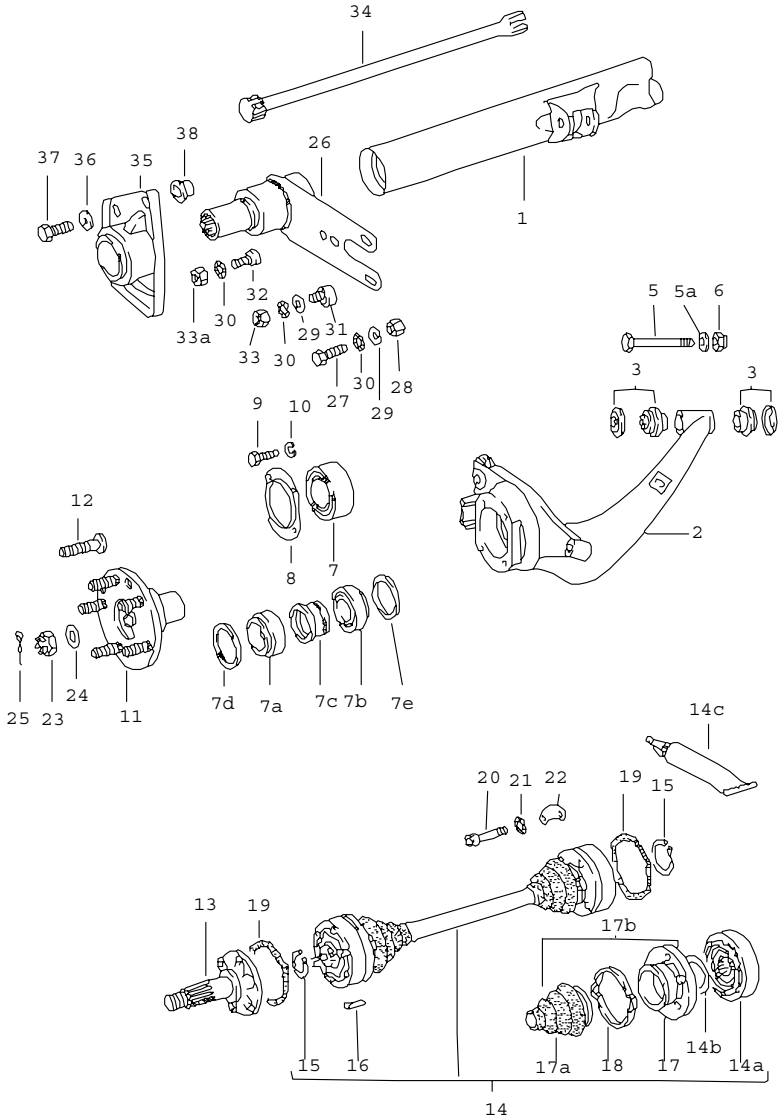

Pos	Part Number	Name	Remarks	Qty	Model
		rear axle			
(1)	911 331 010 02	rear-axle cross-tube		1	SC
(1)	930 331 010 02	rear-axle cross-tube		1	TURBO
2	911 331 513 06	rear-axle trailing arm	/L	1	SC
(2)	911 331 514 06	rear-axle trailing arm	/R	1	SC
(2)	930 331 511 05	rear-axle trailing arm	/L	1	TURBO
(2)	930 331 512 05	rear-axle trailing arm	/R	1	TURBO
3	901 331 059 00	block		4	
5	A 900 082 064 02	hexagon-head bolt M 14 X 1,5 X 75		2	SPM
5	900 082 064 08	hexagon-head bolt M 14 X 1,5 X 75		2	SPM
5	900 082 092 02	hexagon-head bolt M 14 X 1,5 X 80		2	
5A	N 011 534 4	washer A 15		2	
6	999 084 014 02	hexagon nut M 14 X 1,5		2	SPM
6	900 910 094 02	lock nut M 14 X 1,5		2	
7	999 053 020 01	angular-contact bearing		2	SC
7A	999 059 056 00	taper roller bearing		2	TURBO
7B	999 059 047 00	taper roller bearing		2	TURBO
7C	930 331 609 00	spacer sleeve		2	TURBO
7D	999 113 235 40	shaft seal 65 X 85 X 8		2	TURBO
7E	999 113 218 40	shaft seal 58 X 81,2 X 5		2	TURBO
8	911 331 561 30	reinforcement cover		2	SC
9	A 900 075 079 02	hexagon-head bolt M 8 X 22		8	SC
9	900 075 079 02	hexagon-head bolt M 8 X 22		8	SC
10	900 027 015 02	lock ring B 8		8	SC

Pos	Part Number	Name	Remarks	Qty	Model
11	911 331 065 33	rear-wheel hub		2	SC
11	930 331 065 03	rear-wheel hub		2	TURBO
12	904 341 671 00	wheel bolt		10	SC
12	901 331 671 01	wheel bolt		10	TURBO
13	923 332 232 01	drive shaft		2	SC
13	901 332 232 00	drive shaft		2	SC/SPM
13	930 332 232 00	drive shaft		2	TURBO
14	923 332 033 02	drive shaft		2	SC
14	911 332 033 08	drive shaft		2	SC/SPM
14	930 332 037 00	drive shaft		2	TURBO
14A	923 332 032 00	joint		4	SC
14A	911 332 032 02	joint		2	SC/SPM
14A	930 332 034 00	joint		4	TURBO
14B	901 332 311 10	cup spring		4	SC
14B	901 332 312 00	cup spring		4	TURBO
14C	000 043 005 00	grease for drive shaft		X	
15	999 041 016 01	circlip		4	SC
15	999 041 012 01	circlip		8	SC/SPM
15	999 152 084 01	circlip		4	TURBO
16	999 095 019 00	clamping pin S 10 X 20		8	SC/SPM
17	911 332 295 02	protection cap		4	SC/SPM
17	928 332 097 00	joint flange		4	TURBO
17A	901 332 293 12	dust bellows		4	
17B	923 332 037 00	dust bellows		4	SC
18	A 999 512 315 02	clamp		4	
18	999 512 315 02	clamp		4	
19	901 332 297 00	gasket		2	SC/SPM
19	923 332 297 00	gasket		2	SC
19	930 332 297 00	gasket		4	TURBO

Pos	Part Number	Name	Remarks	Qty	Model
20	900 067 229 09	pan-head screw M 10 X 48		16	SC/SPM
20	900 067 211 09	pan-head screw M 8 X 50		24	SC
20	900 067 118 01	pan-head screw M 10 X 60		24	TURBO
21	999 523 103 01	lock washer M 10		8	SC/SPM
22	911 332 191 00	plate		4	SC/SPM
23	901 332 806 00	castle nut		2	
24	999 025 046 01	washer		2	
25	A N 012 538 1	cotter pin 4 X 40		2	
25	N 012 538 1	cotter pin 4 X 40		2	
26	911 333 009 00	strut		2	
-	900 910 092 02	lock nut		4	
-	911 331 107 01	spacer ring		2	
-	911 333 303 00	eccentric screw		2	
-	911 333 305 00	hexagon-head bolt		2	
-	911 333 307 00	washer		4	
-	A 900 075 043 02	hexagon-head bolt M 10 X 30		8	
-	900 075 043 02	hexagon-head bolt M 10 X 30		8	
27	900 083 019 08	hexagon-head bolt M 12 X 1,5 X 35		4	
27	900 083 066 08	hexagon-head bolt M 12 X 1,5 X 40	83-	4	
28	A N 011 020 8	hexagon nut M 12 X 1,5	-82	4	
28	N 011 020 8	hexagon nut M 12 X 1,5	-82	4	
28	A N 022 141 4	lock nut VFM 12 X 1,5	83-	4	

Pos	Part Number	Name	Remarks	Qty	Model
28	N 022 141 4	lock nut M 12 X 1,5	83-	4	
29	901 333 143 01	washer		10	
30	999 523 109 02	lock washer M 12		10	
31	901 333 133 04	eccentric		2	
32	901 333 133 05	eccentric		2	
33	900 078 017 02	hexagon nut M 12 X 1,5		2	
33A	900 076 016 02	hexagon nut M 12 X 1,5		2	
34	911 333 101 09	torsion bar 24,1 $	/L	1	SC
34	911 333 102 09	torsion bar 24,1 $	/R	1	SC
34	911 333 101 03	torsion bar 26 $	/L	1	TURBO
34	911 333 102 03	torsion bar 26 $	/R	1	TURBO
35	901 333 153 00	housing		2	
36	A 900 025 008 02	washer 10,5		8	
36	900 025 008 09	washer 10,5		8	
37	A 900 075 043 02	hexagon-head bolt M 10 X 30		8	
37	900 075 043 02	hexagon-head bolt M 10 X 30		8	
38	911 331 107 01	spacer ring		2	
		- -- E N D -- -			

Pos	Part Number	Name	Remarks	Qty	Model

Model	Year	MG	SG	Illustration	Restrictions	Update	11:19	18.08.2006	PORSCHE PET PORSCHE
911	83	5	02	502-00		203			

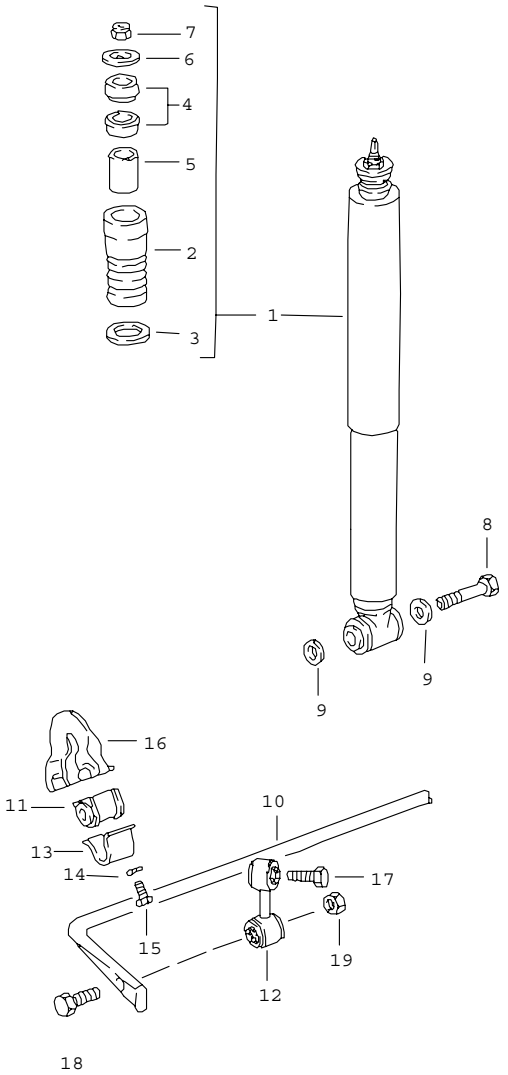

Pos	Part Number	Name	Remarks	Qty	Model
		vibration damper stabiliser			
1	911 333 051 04	vibration damper - boge -		2	SC(USA)(CDN)
1	911 333 051 05	vibration damper - boge -	83-	2	SC(USA)(CDN)
1	911 333 051 49	vibration damper - bilstein -		2	(J)
1	911 333 051 42	vibration damper - bilstein -	-80	2	(USA)(CDN)
1	911 333 051 48	vibration damper - bilstein -	81	2	(USA)(CDN)
1	911 333 051 55	vibration damper - bilstein -	82	2	(USA)(CDN)
1	911 333 051 49	vibration damper - bilstein -	83-	2	SC(USA)(CDN)
2	911 333 301 04	additional spring		2	
2	911 333 301 04	additional spring	83-	2	SC(USA)(CDN)
2	911 333 301 05	additional spring	-82	2	
3	911 333 511 00	washer		2	TURBO
4	911 333 521 00	ring		4	
5	911 333 522 00	bush		2	
6	911 333 523 00	washer		4	
6 A	911 333 523 00	washer - woodhead -	-79	4	SC
7	900 084 013 02	lock nut M 10 X 1		2	
8	900 082 054 02	hexagon-head bolt M 14 X 1,5 X 85		2	SC
8	900 082 019 08	hexagon-head bolt M 14 X 1,5 X 90		2	TURBO
9	999 025 062 02	washer		2	SC
9	999 025 062 02	washer		4	TURBO
10	911 333 701 07	stabiliser 18 $		1	SC

Pos	Part Number	Name	Remarks	Qty	Model
10	930 333 701 23	stabiliser 18 $		1	TURBO
11	477 411 313 B	stabiliser mounting		2	
12	930 333 071 00	stabiliser mounting	/L	1	
(12)	930 333 072 00	stabiliser mounting	/R	1	
13	113 411 333	retaining bow		2	
14	A 900 027 015 02	lock ring B 8		4	
14	900 027 015 02	lock ring B 8		4	
15	A N 010 239 11	hexagon-head bolt M 8 X 18		4	
15	N 010 239 11	hexagon-head bolt M 8 X 18		4	
16	911 501 180 02	bracket		2	
17	A N 010 156 3	hexagon-head bolt M 12 X 1,5 X 70		2	
17	N 010 156 3	hexagon-head bolt M 12 X 1,5 X 70		2	
18	900 082 035 02	hexagon-head bolt M 12 X 1,5 X 60		2	
19	900 910 046 02	lock nut VM 12 X 1,5		2	
		- -- E N D -- -			

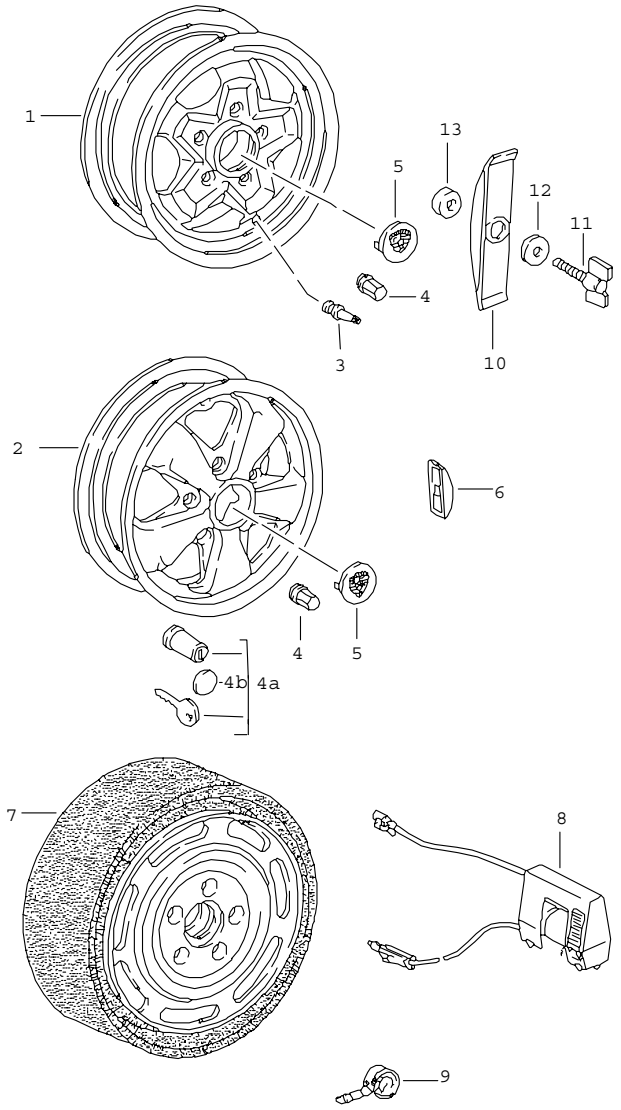

Pos	Part Number	Name	Remarks	Qty	Model
		wheels			
1	911 361 023 44	alloy wheel 6J X 15 ET = 36,0 unvarnished		2	SC
1	911 361 023 40	alloy wheel 6J X 15 ET = 36,0 silver	-81	2	SC
1	911 361 023 45	alloy wheel 6J X 15 ET = 36,0 black lacquered	82-	2	SC
-	911 361 021 00	perforated disc wheel 6J X 15 ET = 36,0 steel silver winter wheel		X	SC
1	911 361 023 50	alloy wheel 7J X 15 ET = 23,3 unvarnished		2	SC
1	911 361 023 50	alloy wheel 7J X 15 ET = 23,3 silver	-81	2	SC
1	911 361 023 55	alloy wheel 7J X 15 ET = 23,3 black lacquered	82-	2	SC
2	911 362 113 00	alloy wheel 6J X 16 black star rim flange polished		2	SC
2	911 361 020 97	forged wheel 6J X 16 unvarnished rim flange polished		2	SC
2	911 362 115 00	alloy wheel 7J X 16 black star rim flange polished		2	

Pos	Part Number	Name	Remarks	Qty	Model
2	911 362 115 90	alloy wheel 7J X 16 unvarnished rim flange polished		2	
2	911 362 117 00	alloy wheel 8J X 16 black star rim flange polished		2	TURBO
2	911 361 020 99	forged wheel 8J X 16 unvarnished rim flange polished		2	TURBO
2	911 361 020 93	forged wheel 7J X 15 unvarnished rim flange polished		2	SC/M 439
2	911 361 020 94	forged wheel 8J X 15 unvarnished rim flange polished		2	SC/M 439
2	911 361 020 41	forged wheel 7J X 15 black star rim flange polished		2	
2	911 361 020 42	forged wheel 8J X 15 black star rim flange polished		2	
3	900 265 001 50	rubber valve		4	
-	911 361 561 01	valve support		2	
4	999 182 003 36	wheel nut for cast alumin. alloy wheels		20	
(4)	N 020 112 1	ball seat nut A 14 for steel rim only		X	SC
4A	928 361 047 03	wheel nut 1 set lockable		1	
4B	965 361 167 00	cap		4	
5	911 361 032 00	hub cap		4	SC
5	911 361 032 28	hub cap black		4	TURBO

Pos	Part Number	Name	Remarks	Qty	Model
5	SOW 911 038 11	hub cap black emblem coloured		4	
6	901 361 410 00	balance stick-on weight 10 G		X	
6	901 361 411 00	balance stick-on weight 20 G		X	
6	901 361 412 00	balance stick-on weight 30 G		X	
6	901 361 413 00	balance stick-on weight 40 G		X	
6	901 361 414 00	balance stick-on weight 50 G		X	
6	901 361 415 00	balance stick-on weight 60 G		X	
6	901 361 416 00	balance stick-on weight 70 G		X	
6	901 361 417 00	balance stick-on weight 80 G		X	
7	928 362 030 02	emergency wheel with collapsible tire		1	
(8)	911 652 052 00	small electric compressor		1	
-	911 361 511 01	compressed air bottle		1	
-	996 361 521 00	boot for impeller		1	
9	911 722 201 02	tyre pressure gauge		1	
10	A 911 361 633 01	clamping bow		1	
10	911 361 633 01	clamping bow		1	
11	999 074 106 02	winged screw M 8 X 25		1	
12	900 151 008 02	washer B 8,4		1	
13	803 813 583	washer		1	
		- -- E N D -- -			

Model	Year	MG	SG	Illustration	Restrictions	Update	11:20	18.08.2006	PORSCHE PET PORSCHE
911	83	6	02	602-00		203			

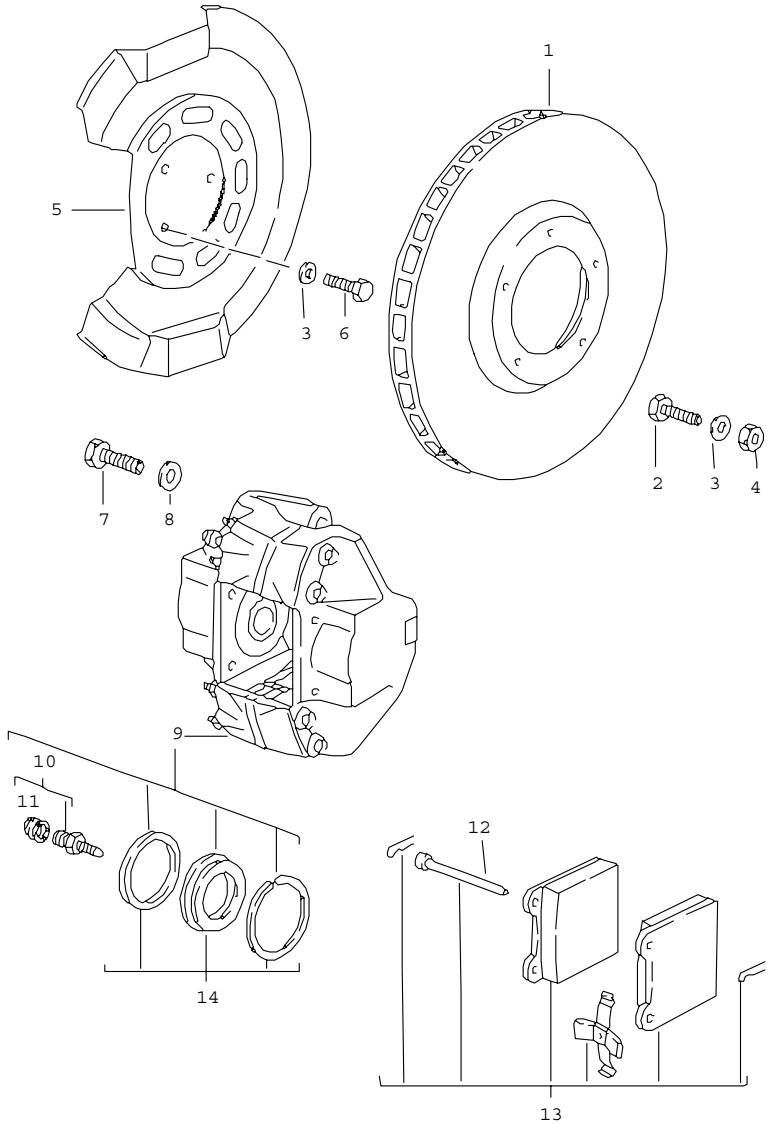

Pos	Part Number	Name	Remarks	Qty	Model
		disc brake front axle			SC
1	477 405 083 A	brake disc		2	
2	900 075 079 02	hexagon-head bolt M 8 X 22		10	
3	A N 012 241 8	spring washer B 8 X 15		10	
3	N 012 241 8	spring washer B 8		10	
4	900 076 025 02	hexagon nut M 8		10	
5	901 351 801 17	protective plate		2	
6	N 010 235 3	hexagon-head bolt M 8 X 10		6	
7	900 083 023 02	hexagon-head bolt M 12 X 1,5 X 35		4	
8	A 900 028 014 02	spring washer B 12		4	
8	900 028 014 02	spring washer B 12		4	
9	A 911 351 425 02	fixed calliper without pad	/L -81	1	
9	911 351 425 02	fixed calliper without pad	/L	1	
9	A 911 351 426 02	fixed calliper without pad	/R -81	1	
9	911 351 426 02	fixed calliper without pad	/R	1	
10	911 351 919 01	ventilation valve		2	
11	901 351 927 10	dust boot		2	
12	* 911 351 951 00	parts kit		4	
13	A 911 351 949 01	set of brake pads complete without asbestos		1	
(13)	A 911 351 950 01	set of brake pads without asbestos		1	
(13)	911 351 950 02	set of brake pads without asbestos		1	

Pos	Part Number	Name	Remarks	Qty	Model	Pos	Part Number	Name	Remarks	Qty	Model
(13)	911 351 950 06	set of brake pads		1							
(13)	911 351 951 00	parts kit		1							
14	* 911 351 946 00	set of seals		1							
		- -- E N D -- -									

Model	Year	MG	SG	Illustration	Restrictions	Update	11:20	18.08.2006	PORSCHE PET PORSCHE
911	83	6	02	602-05		203			

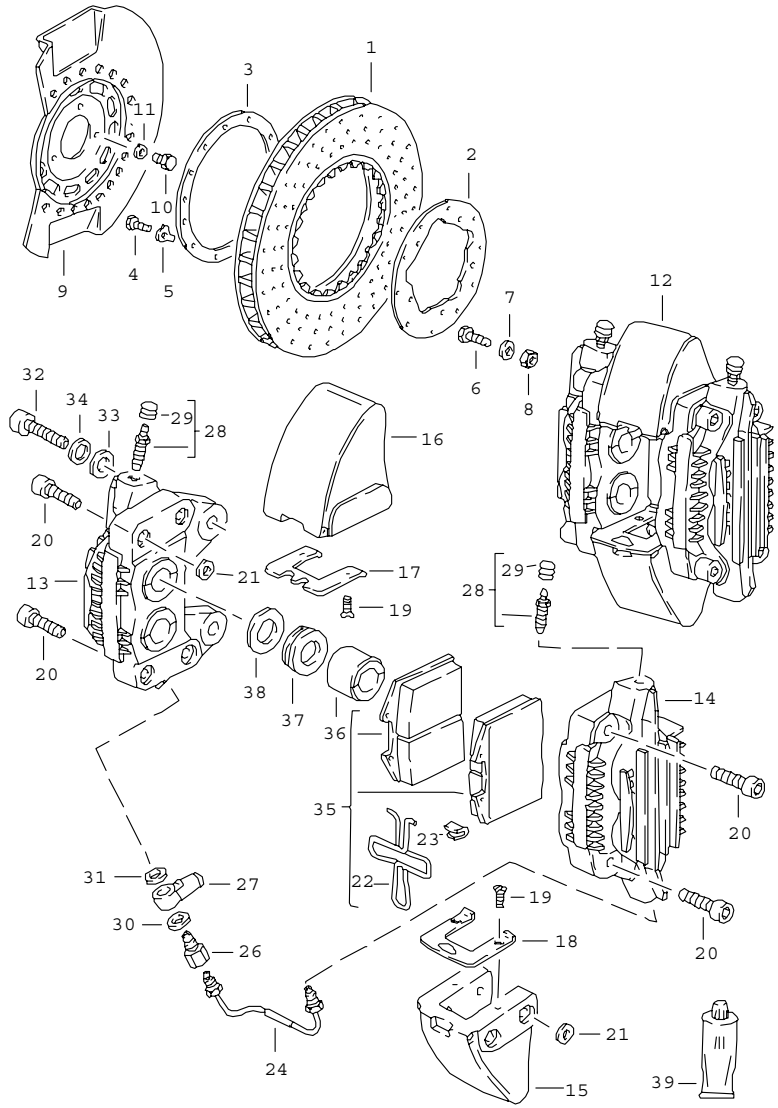

Pos	Part Number	Name	Remarks	Qty	Model
		disc brake front axle			TURBO
1	930 351 047 00	brake disc	/L -80	1	
1	930 351 047 01	brake disc	/L 81-	1	
(1)	930 351 048 00	brake disc	/R -80	1	
(1)	930 351 048 01	brake disc	/R 81-	1	
2	930 351 457 01	brake flange	-80	2	
3	930 351 423 00	ring		2	
4	900 075 057 02	hexagon-head bolt M 6 X 16	-80	24	
5	900 039 002 02	tab washer	-80	24	
6	900 075 079 02	hexagon-head bolt M 8 X 22		10	
7	A N 012 241 8	spring washer B 8 X 15		10	
7	N 012 241 8	spring washer B 8		10	
8	900 076 025 02	hexagon nut M 8		10	
9	A 930 351 803 01	protective plate		2	
9	930 351 803 01	protective plate		2	
10	N 010 235 3	hexagon-head bolt M 8 X 10		6	
11	N 012 241 8	spring washer B 8		6	
12	930 351 091 03	brake calliper without brake pad	/L	1	
(12)	930 351 092 03	brake calliper without brake pad	/R	1	
13	930 351 091 03	brake calliper	/L	1	
(13)	930 351 092 03	brake calliper	/R	1	
14	930 351 953 01	brake calliper		2	
15	A 930 351 563 02	bridge 1		2	

Pos	Part Number	Name	Remarks	Qty	Model
15	930 351 563 04	bridge 1		2	
16	A 930 351 564 02	bridge 2		2	
16	930 351 564 03	bridge 2		2	
17	930 351 541 03	spring plate 1		2	
18	930 351 542 02	spring plate 2		2	
19	900 269 017 02	countersunk-head screw M 5 X 12		8	
20	900 067 170 02	pan-head screw M 12 X 1,5 X 40		16	
21	930 351 580 01	spacer sleeve		16	
22	* 951 352 950 00	expanding spring		2	
23	* 930 351 559 00	tab washer F >>93087 00379 F >>93088 00216 F >>93087 09550	-79	2	
24	A 930 355 061 01	connecting line	/L	1	
(24)	930 355 061 01	connecting line	/L	1	
(24)	930 355 062 01	connecting line	/R	1	
26	914 355 534 00	banjo bolt		2	
27	914 355 531 00	socket piece		2	
28	A 930 355 517 00	bleeder screw		4	
28	930 351 919 00	ventilation valve		1	
29	901 351 927 10	dust boot		4	
30	900 123 005 20	sealing ring A 12 X 16		2	
31	N 013 808 3	sealing ring A 10 X 16		2	
32	900 067 170 02	pan-head screw M 12 X 1,5 X 40		4	
33	930 351 553 01	spacer		4	
34	A 900 028 014 02	spring washer B 12		4	
34	900 028 014 02	spring washer B 12		4	
(35)	930 351 938 05	set of brake pads		1	
(35)	951 351 939 03	set of brake pads without asbestos		1	
36	930 351 551 04	piston 38 $		8	
37	930 351 547 00	scraper ring		8	
38	930 351 555 01	sealing ring		8	
39	000 043 020 00	optimoly		1	

- -- E N D -- -

Model	Year	MG	SG	Illustration	Restrictions	Update	11:20	18.08.2006	PORSCHE PET PORSCHE
911	83	6	03	603-00		203			

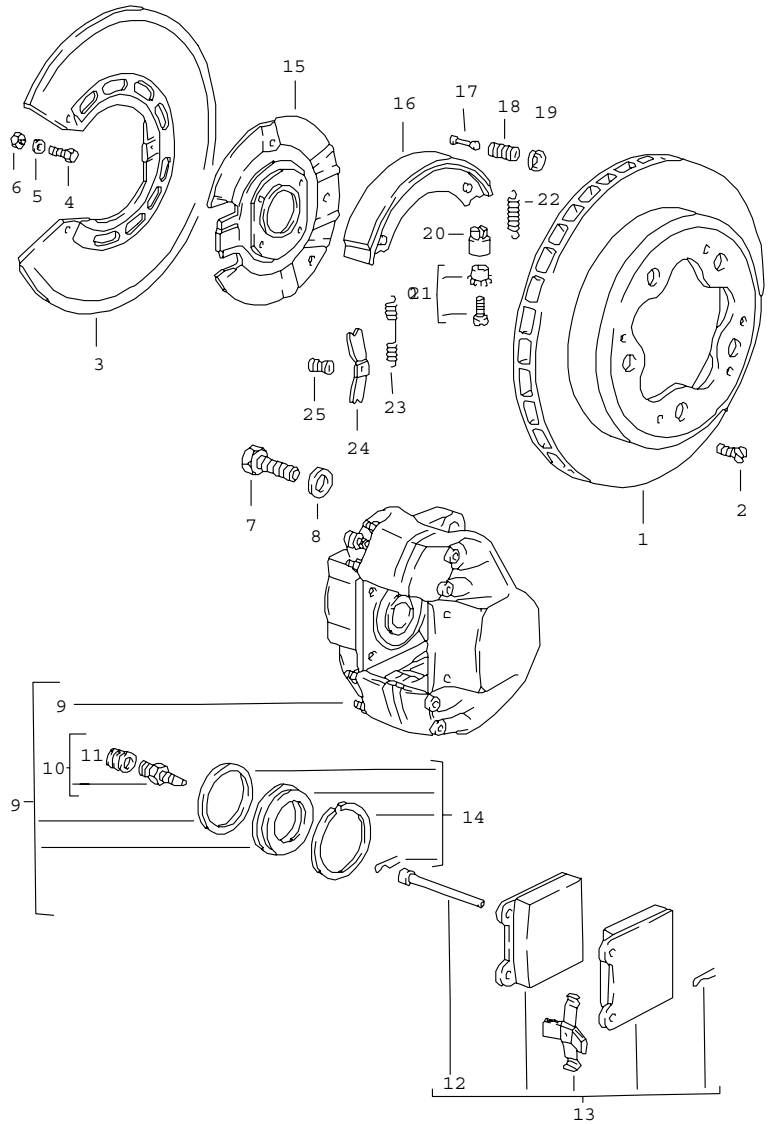

Pos	Part Number	Name	Remarks	Qty	Model
		disc brake rear axle			SC
1	901 352 041 14	brake disc		2	
2	N 033 167 1	countersunk-head screw AM 6 X 12		4	
3	911 352 801 20	protective plate		2	
4	A 900 075 087 02	hexagon-head bolt M 8 X 16		4	
4	900 075 087 02	hexagon-head bolt M 8 X 16		4	
(4)	N 010 235 3	hexagon-head bolt M 8 X 10		2	
5	N 012 241 8	spring washer B 8		6	
6	900 076 025 02	hexagon nut M 8		4	
7	N 010 137 2	hexagon-head bolt M 12 X 1,5 X 35		4	
8	900 027 017 02	lock ring B 12		4	
9	911 352 907 00	fixed calliper without pad	/L	1	
(9)	911 352 908 00	fixed calliper without pad	/R	1	
10	901 352 977 10	ventilation valve		2	
11	901 351 927 10	dust boot		2	
12	901 352 991 01	retaining pin		4	
(13)	A 911 352 950 03	set of brake pads - textar - - textar -		1	
(13)	911 352 950 05	set of brake pads - textar -		1	
(13)	911 352 951 00	mounting parts 1 set		1	
14	* 911 352 998 00	set of seals		2	
		handbrake			
15	911 352 081 30	supporting plate		2	

Model	Year	MG	SG	Illustration	Restrictions	Update			
911	83	6	03	603-00		203	11:20	18.08.2006	PORSCHE PET PORSCHE

Pos	Part Number	Name	Remarks	Qty	Model	Pos	Part Number	Name	Remarks	Qty	Model
16	911 352 097 10	brake shoe		4							
17	901 352 959 10	roll pin		4							
18	901 352 957 10	compression spring		4							
19	901 352 955 10	concave washer		4							
20	911 352 944 00	bush		2							
21	911 352 098 00	adjusting screw		2							
22	901 352 932 10	return spring		2							
23	901 352 954 10	return spring		2							
24	911 352 090 00	expanding bow		4							
25	901 352 953 10	compression spring		2							
		- -- E N D -- -									

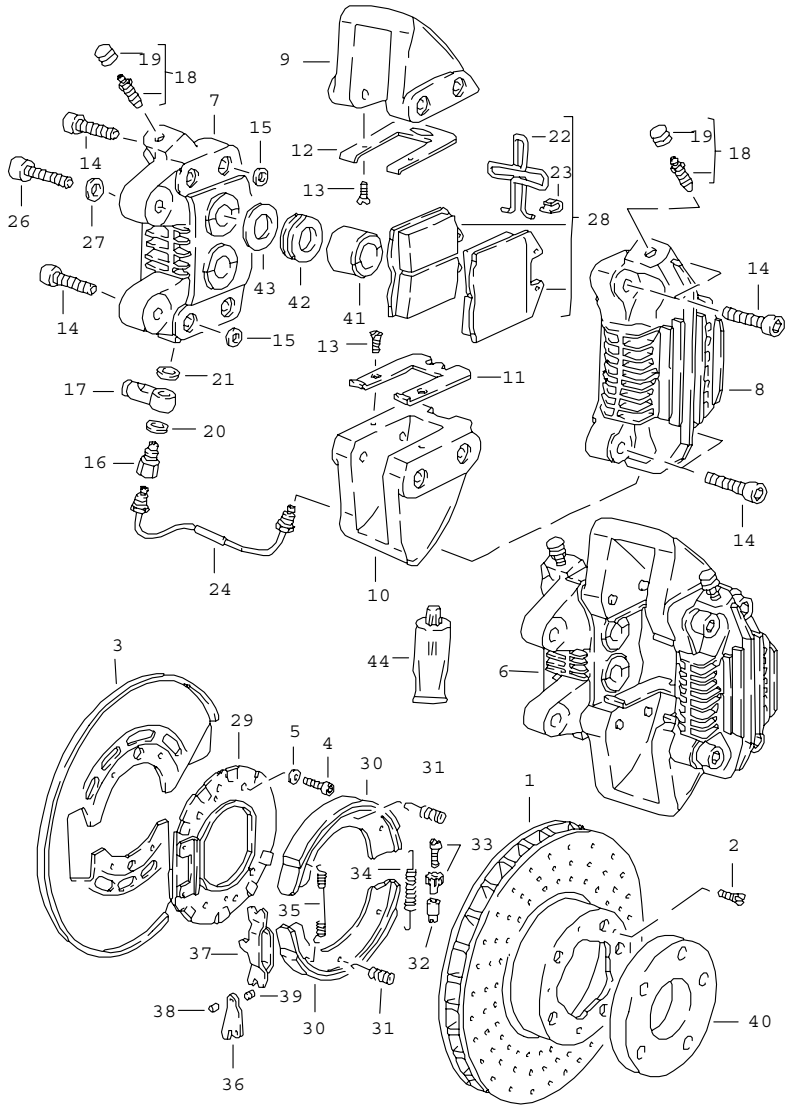

Pos	Part Number	Name	Remarks	Qty	Model
		disc brake rear axle			TURBO
1	930 352 045 00	brake disc	/L	1	
(1)	930 352 046 00	brake disc	/R	1	
2	N 033 167 1	countersunk-head screw M 6 X 12		4	
3	930 352 801 04	protective plate		2	
4	A 900 067 057 02	pan-head screw M 8 X 20		8	
4	900 067 057 02	pan-head screw M 8 X 20		8	
5	N 012 241 8	spring washer B 8		8	
6	A 930 352 091 03	brake calliper without pad	/L	1	
6	930 352 091 03	brake calliper without pad	/L	1	
(6)	A 930 352 092 03	brake calliper without pad	/R	1	
(6)	930 352 092 03	brake calliper without pad	/R	1	
7	A 930 352 951 00	brake calliper		2	
7	930 352 951 01	brake calliper		2	
8	A 930 352 953 00	brake calliper		2	
8	930 352 953 01	brake calliper		2	
9	A 930 352 563 03	bridge 1		2	
9	930 352 563 03	bridge 1		2	
10	A 930 352 564 02	bridge 2		2	
10	930 352 564 04	bridge 2		2	
11	930 351 539 02	spring plate 1		2	
12	930 351 540 02	spring plate 2		2	

Pos	Part Number	Name	Remarks	Qty	Model
13	900 269 017 02	countersunk-head screw M 5 X 12		8	
14	900 067 170 02	pan-head screw M 12 X 1,5 X 40		16	
15	930 351 580 01	spacer sleeve		16	
16	914 355 534 00	banjo bolt		2	
17	914 355 531 00	socket piece		2	
18	930 351 919 00	ventilation valve		4	
19	901 351 927 10	dust boot		4	
20	900 123 005 20	sealing ring A 12 X 16		2	
21	N 013 808 3	sealing ring A 10 X 16		2	
22	* 951 352 950 00	expanding spring		2	
23	* 930 351 559 00	tab washer F >>93087 00379 F >>93088 00216 F >>93087 09550	-79	2	
24	A 930 355 061 01	connecting line	/L	1	
24	930 355 061 01	connecting line	/L	1	
(24)	A 930 355 062 01	connecting line	/R	1	
(24)	930 355 062 01	connecting line	/R	1	
26	900 067 170 02	pan-head screw M 12 X 1,5 X 40		4	
27	A 900 028 014 02	spring washer B 12		4	
27	900 028 014 02	spring washer B 12		4	
28	A 930 351 938 02	set of brake pads F >>93087 00379 F >>93088 00216 F >>93087 09550		1	
28	A 930 351 938 04	set of brake pads F 93087 00380>> F 93088 00217>> F 93087 09551>>		1	
(28)	930 351 938 05	set of brake pads without asbestos		1	
(28)	951 351 939 03	set of brake pads without asbestos		1	
		handbrake			
29	930 352 081 03	supporting plate		2	
30	928 352 097 00	brake shoe		4	
30	996 352 993 00	repair kit without asbestos		4	
31	930 352 957 00	compression spring		4	
32	911 352 944 00	bush		2	
33	911 352 098 00	adjusting screw		2	
34	901 352 932 10	return spring		2	
35	901 352 954 10	return spring		2	
36	993 352 073 00	push-button lock		2	
37	993 352 073 00	push-button lock		2	
38	993 352 737 00	bolt		2	
39	928 352 447 00	bolt		2	
40	930 331 611 04	spacer ring		2	
41	930 352 555 01	piston 30 $		8	
42	930 352 554 00	scraper ring		8	
43	930 352 553 02	sealing ring		8	
44	000 043 020 00	optimoly - TA -		1	

- -- E N D -- -

Model	Year	MG	SG	Illustration	Restrictions	Update	11:21	18.08.2006	PORSCHE PET PORSCHE
911	83	6	04	604-00		203			

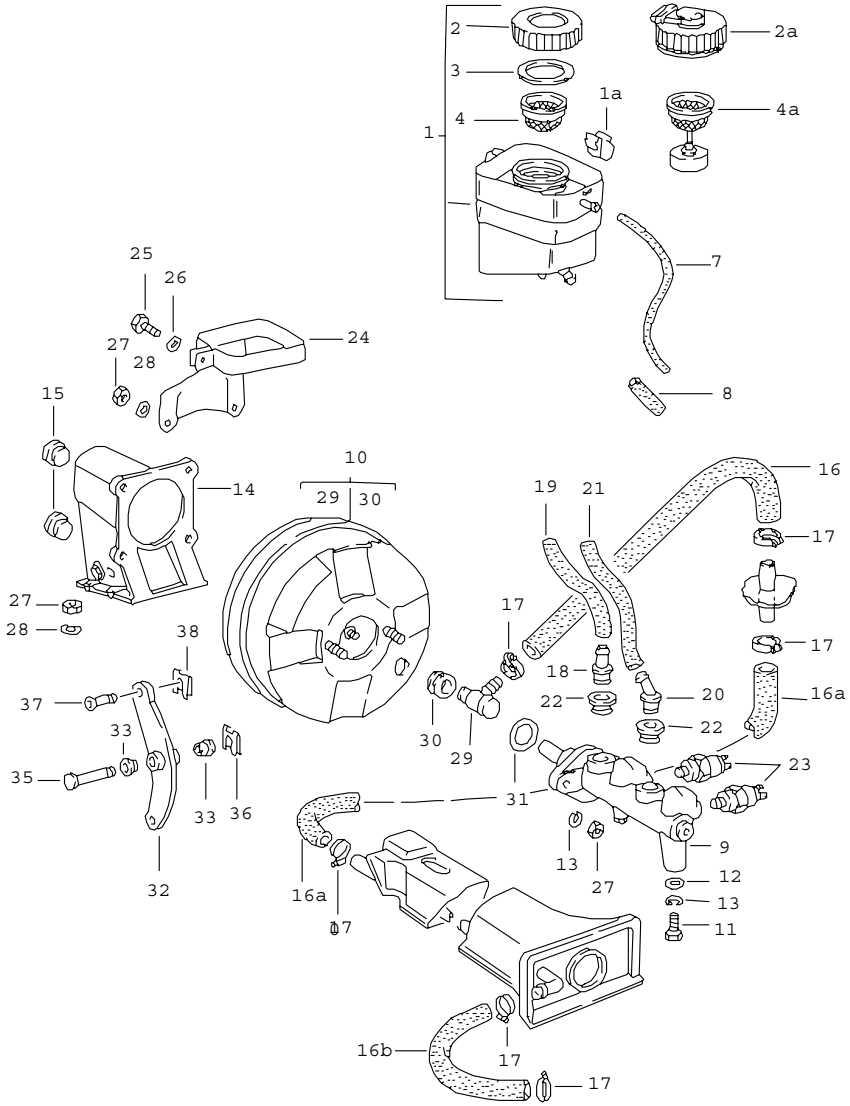

Pos	Part Number	Name	Remarks	Qty	Model
		brake fluid reservoir brake master cylinder			
1	911 355 013 13	brake fluid reservoir use also: 911.355.419.02 911.355.420.01	/RL /RL	1	(J)(AUS)
1A	477 971 939	cable terminal		1	
2	911 355 905 02	cover		1	
2A	911 355 419 02	threaded joint with warning contact		1	M 592
3	901 355 908 00	gasket		1	
4	A 211 611 381 B	strainer		1	
4	211 611 381 B	strainer		1	
4A	911 355 420 01	float		1	M 592
-	N 020 361 2	hose 4 X 1,5		*	
7	-	900 MM	/LL	1	
8	911 355 155 00	pipe 5 X 3 X 1280		1	
9	A 911 355 011 12	brake master cylinder		1	SC
9	911 355 011 12	brake master cylinder		1	SC
(9)	A 930 355 011 03	brake master cylinder		1	TURBO
(9)	930 355 011 03	brake master cylinder		1	TURBO
10	A 930 355 027 00	vacuum booster		1	SC
10	930 355 027 00	vacuum booster		1	
11	N 010 237 6	hexagon-head bolt M 8 X 12		1	
12	900 151 008 02	washer A 8,4		1	
13	900 027 015 02	lock ring B 8		3	
14	911 355 381 01	bearing bracket	/LL	1	
15	999 703 056 40	plug		2	

Pos	Part Number	Name	Remarks	Qty	Model
16	911 355 609 00	hose	/LL	1	
-	999 181 022 51	hose 11,8 X 4	/LL	*	
16A	-	320 MM tunnel boot floor plate		1	
16B	-	1430 MM engine tunnel		1	SC
16B	-	1700 MM engine tunnel		1	TURBO
17	900 272 003 02	hose clamp		6	
18	911 355 322 00	intake socket		1	
-	999 181 021 50	hose 7,5 X 12,5		*	
19	-	65 MM		1	
20	911 355 323 00	intake socket		1	
-	999 181 021 50	hose 7,5 X 12,5		*	
21	-	120 MM		1	
22	911 355 922 00	plug		2	
23	113 945 515 G	stop light switch		2	
24	911 355 038 01	retaining strap		1	
25	900 075 057 02	hexagon-head bolt M 6 X 16		1	
26	N 011 524 7	washer		1	
27	900 076 025 02	hexagon nut M 8		10	
28	N 012 241 8	spring washer B 8		8	
29	A 191 611 933 F	check valve		1	
29	191 611 933 F	check valve		1	
30	911 355 921 00	rubber seal		1	
31	251 611 243	sealing ring		1	
(32)	911 355 083 03	reverse lever	/LL	1	
33	928 423 542 00	bearing sleeve		2	
35	911 355 511 01	pin		1	
36	N 012 654 1	lock		1	
37	A 999 166 049 02	bolt		1	
37	N 012 654 1	lock		1	
38	999 166 034 02	sl-lock		1	

- -- E N D -- -

Model	Year	MG	SG	Illustration	Restrictions	Update	11:21	18.08.2006	PORSCHE PET PORSCHE
911	83	6	04	604-05		203			

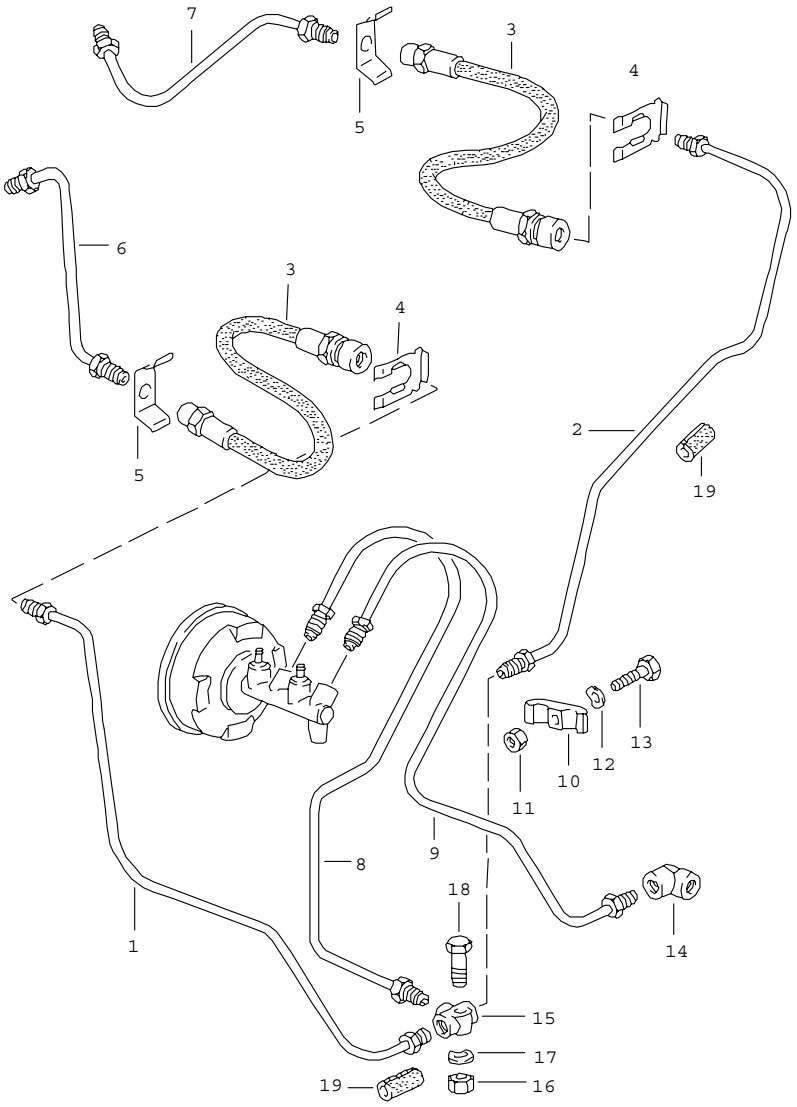

Pos	Part Number	Name	Remarks	Qty	Model
		brake lines front			
1	911 355 618 01	brake line	/L	1	
2	911 355 617 02	brake line	/R	1	
3	901 355 632 01	brake hose		2	
4	113 611 715 A	brake hose bracket		2	
5	803 611 715	retainer spring		2	
6	911 355 605 01	brake line		2	SC
6	930 355 063 00	brake line	/L	1	TURBO
7	930 355 064 00	brake line	/R	1	TURBO
8	911 355 608 03	connecting line	/LL	1	
9	911 355 607 03	connecting line	/LL	1	
10	999 511 112 40	dual clip		1	
11	999 084 018 02	lock nut M 6		1	
12	N 012 226 5	spring washer A 6		1	
13	900 075 016 02	hexagon-head bolt M 6 X 22		1	
14	901 355 615 00	angled pipe		1	
15	914 355 667 00	distributor		1	
16	900 076 010 02	hexagon nut M 6		1	
17	N 011 524 7	washer		1	
18	A 900 075 017 02	hexagon-head bolt M 6 X 25		1	
18	900 075 341 02	screw M 6 X 25		1	
19	914 355 691 00	hose piece		3	
		- -- E N D -- -			

Model	Year	MG	SG	Illustration	Restrictions	Update				
911	83	6	04	604-10		203	11:21	18.08.2006	PORSCHE	PET	PORSCHE

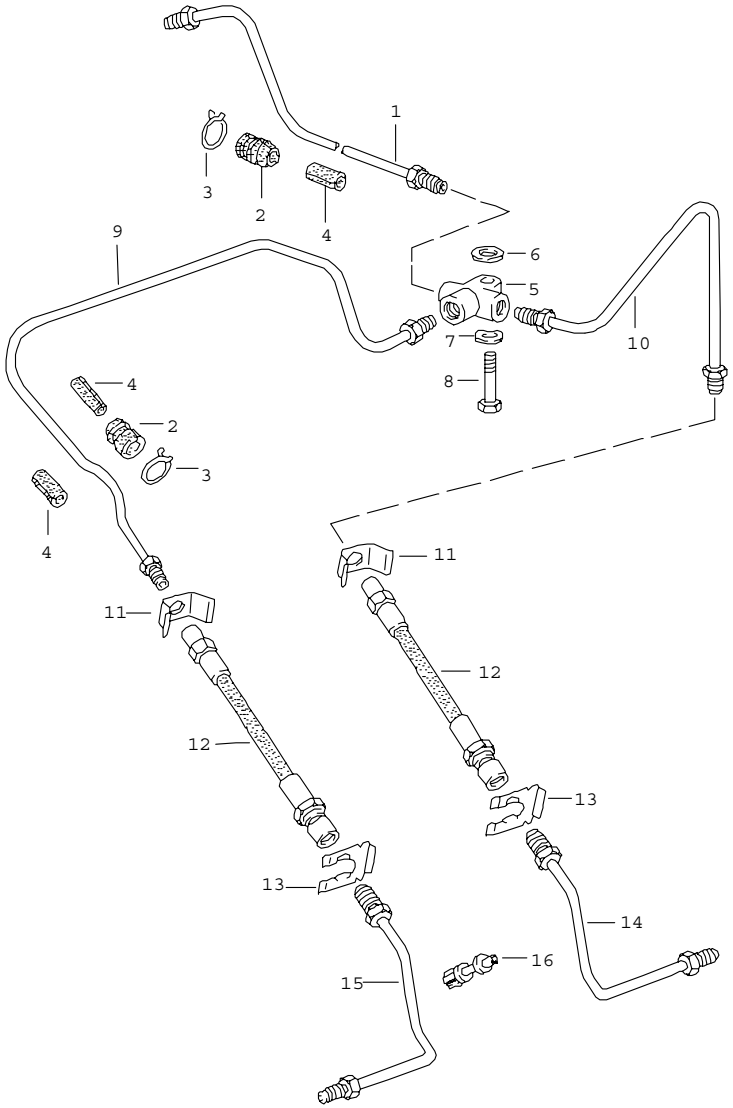

Pos	Part Number	Name	Remarks	Qty	Model
		brake lines rear			
1	911 355 611 01	brake line		1	
2	914 355 651 00	rubber sleeve		2	
3	914 355 652 00	clamp		2	
4	914 355 691 00	hose piece		3	
5	914 355 667 00	distributor		1	
6	A 900 151 006 09	washer B 6,4		1	
6	N 011 666 7	washer B 6,4		1	
7	N 011 524 7	washer		1	
8	900 075 341 02	screw M 6 X 25		1	
9	911 355 627 04	connecting line	/L	1	SC
9	A 930 355 627 04	connecting line	/L	1	TURBO
9	930 355 627 04	connecting line	/L	1	TURBO
10	911 355 653 05	connecting line	/R	1	SC
10	A 930 355 653 02	connecting line	/R	1	TURBO
10	930 355 653 05	connecting line	/R	1	TURBO
11	803 611 715	retainer spring		2	
12	901 355 631 01	brake hose		2	
13	113 611 715 A	brake hose bracket		2	
(14)	911 355 621 02	brake line		2	SC
14	930 355 066 00	brake line	/R	1	TURBO
15	930 355 065 00	brake line	/L	1	TURBO
16	999 507 235 40	pipe clip		2	TURBO
		- -- E N D -- -			

Model	Year	MG	SG	Illustration	Restrictions	Update		
911	83	6	98	698-00		203	11:21	18.08.2006

Pos	Part Number	Name	Remarks	Qty	Model
		repair kits			
		front axle			
>>	> 911 351 950 06	set of brake pads		1	SC
		comprising:			
		brake pad		4	
>>	> 911 351 951 00	parts kit		1	SC
		comprising:			
		expanding spring		2	
		retaining pin		4	
>>	> 911 351 946 00	set of seals		2	SC
		for			
		fixed calliper			
		911.351.425/426.01			
		comprising:			
		gasket		2	
		protection cap		2	
		clamping ring		2	
		rear axle			
>>	> 911 352 950 03	set of brake pads		1	SC
		comprising:			
		brake pad		4	
>>	> 911 352 950 05	set of brake pads		1	
		comprising:			
		brake pad		4	
>>	> 911 352 951 00	parts kit		1	SC
		comprising:			
		expanding spring		2	
		retaining pin		4	
		safety seal		4	
>>	> 911 352 998 00	set of seals		2	SC
		for			
		fixed calliper			
		1 set			
		comprising:			
		gasket		2	
		for			
		piston			
		protection cap		2	
		clamping ring		2	
		safety seal		1	
		safety seal		1	
		front axle			
		rear axle			
>>	> 930 351 938 05	set of brake pads		2	TURBO
		comprising:			
		brake pad		4	

Model	Year	MG	SG	Illustration	Restrictions	Update		
911	83	6	98	698-00		203	11:21	18.08.2006

Pos	Part Number	Name	Remarks	Qty	Model
>>	> 951 351 939 03	set of brake pads without asbestos comprising: brake pad		2 4	TURBO
>>	> 911 355 925 00	repair kit for brake master cylinder 911.355.011.10 20,64 MM comprising: support ring boot washer piston boot sealing ring support ring boot washer piston washer boot intermediate ring circlip 25 X 1,2 o-ring		1 1 1 1 1 2 1 1 1 1 1 2 2 1 1 1	SC
>>	> 928 355 913 00	repair kit for brake master cylinder 930.355.011.01 23,81 MM comprising: support ring boot washer piston boot sealing ring support ring boot washer piston washer boot intermediate ring circlip o-ring		1 1 1 1 1 2 1 1 1 1 1 2 2 1 1 1	TURBO
		- -- E N D -- -			

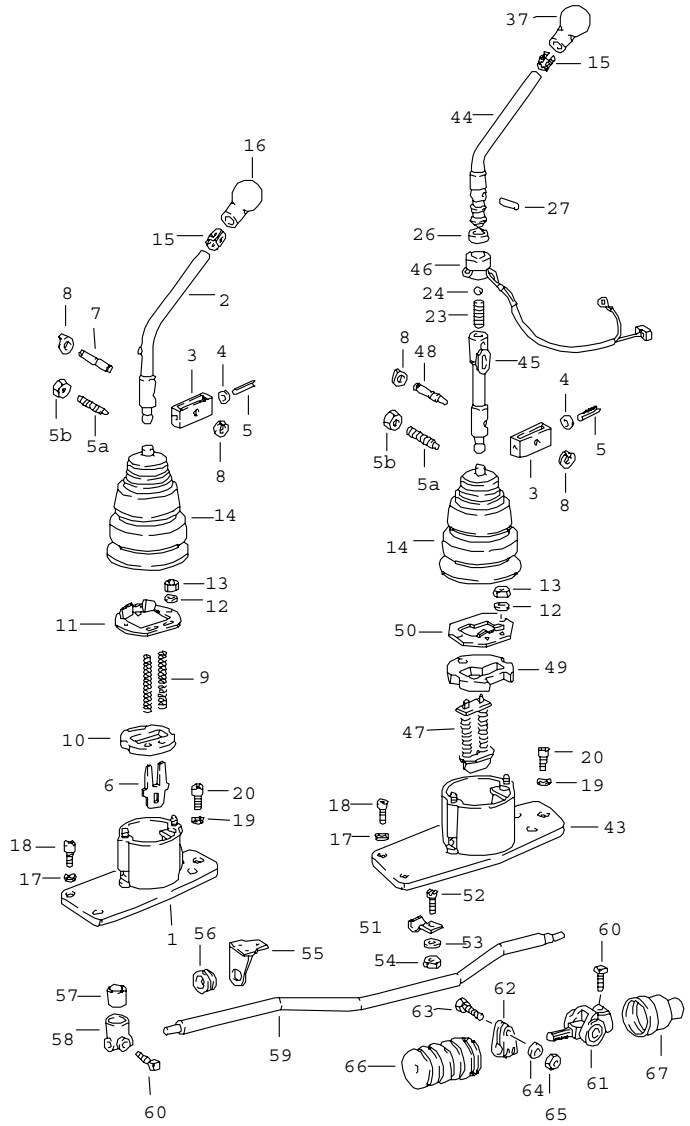

Pos	Part Number	Name	Remarks	Qty	Model
		transmission control			
1	911 424 019 06	gearshift bracket		1	
2	911 424 017 07	gearshift lever		1	SC
(2)	930 424 017 00	gearshift lever		1	TURBO
3	911 424 124 02	shift-lever bearing		1	SC
(3)	930 424 071 00	fork		1	TURBO
-	930 424 125 00	leaf spring		1	TURBO
-	900 234 041 01	shim 10 X 16 X 1,3		1	TURBO
-	900 116 007 01	lock washer 8		1	TURBO
4	900 025 007 02	washer A 8,4		1	SC
4	911 424 187 01	shim 0,2 MM		1	TURBO
5	900 197 035 01	tensioning sleeve 8 X 28		1	
5A	911 424 335 00	threaded pin		1	
5B	N 011 113 3	hexagon nut M 14		1	
6	911 424 144 00	guide plate		1	SC
7	911 424 129 06	pin		1	SC
8	999 166 027 02	lock		2	SC
9	911 424 131 01	compression spring		2	SC
10	911 424 147 00	buffer plate		1	SC
(10)	930 424 147 00	buffer plate		1	TURBO
-	930 424 165 01	retainer plate		1	TURBO
11	911 424 063 04	carrier plate 5-speed		1	SC
12	N 012 006 4	lock ring B 6		2	
13	900 076 010 02	hexagon nut M 6		2	
14	911 424 181 01	sleeve		1	

Pos	Part Number	Name	Remarks	Qty	Model
15	999 532 003 00	retainer		1	
16	930 424 069 01	gearshift knob 4-speed		1	TURBO
(16)	911 424 071 01	gearshift knob 5-speed		1	SC
17	N 012 241 1	spring washer B 8		3	
18	A 900 067 057 02	pan-head screw M 8 X 20		3	
18	900 067 057 02	pan-head screw M 8 X 20		3	
19	900 028 008 01	spring washer B 6		2	
20	A 900 067 011 02	pan-head screw M 6 X 20		2	
20	900 067 011 02	pan-head screw M 6 X 20		2	
23	905 424 111 02	compression spring		1	SC/SPM
24	900 108 012 00	ball		1	SC/SPM
26	925 424 234 00	stop ring		1	SC/SPM
27	905 424 107 02	straight pin		1	SC/SPM
-	999 513 021 40	tie-wrap		2	SC/SPM
37	911 424 073 01	gearshift knob 3 speed		1	SC/SPM
43	925 424 019 01	gearshift bracket		2	SC/SPM
44	925 424 023 02	gearshift lever		3	SC/SPM
45	925 424 024 02	gearshift lever		3	SC/SPM
46	905 613 039 00	contacts		1	SC/SPM
47	930 424 029 00	guide plate		1	SC/SPM
48	925 424 129 01	pin		1	SC/SPM
49	925 424 147 00	buffer plate		1	SC/SPM
50	925 424 165 00	stop plate		1	SC/SPM
51	900 171 008 02	cable clip		1	SC/SPM
52	900 015 003 10	pan-head screw M 4 X 10		1	SC/SPM
53	900 114 014 01	shake-proof washer		1	SC/SPM
54	900 076 002 10	hexagon nut M 4		1	SC/SPM
55	930 424 031 00	bearing bracket	-82	1	SC
55	930 424 031 00	bearing bracket	83-	1	SC
55	930 424 031 00	bearing bracket		1	TURBO
56	914 424 224 00	friction ring		1	
57	911 424 139 00	ball socket		1	
(58)	930 424 241 00	head shift rod		1	
59	911 424 020 00	gear shift rod		1	
60	901 424 229 00	conical screw		2	
61	911 424 024 04	shift rod coupling		1	
62	914 424 214 00	clamp		1	
63	A N 010 335 5	hexagon-head bolt M 8 X 35		1	
63	N 010 335 5	hexagon-head bolt M 8 X 35		1	
64	999 523 102 02	lock washer		1	
65	900 076 025 02	hexagon nut M 8		1	
66	911 424 292 00	sealing sleeve		1	
67	911 424 294 00	sealing sleeve		1	
		- -- E N D -- -			

Model	Year	MG	SG	Illustration	Restrictions	Update				
911	83	7	01	701-05		203	11:22	18.08.2006	PORSCHE	PET	PORSCHE

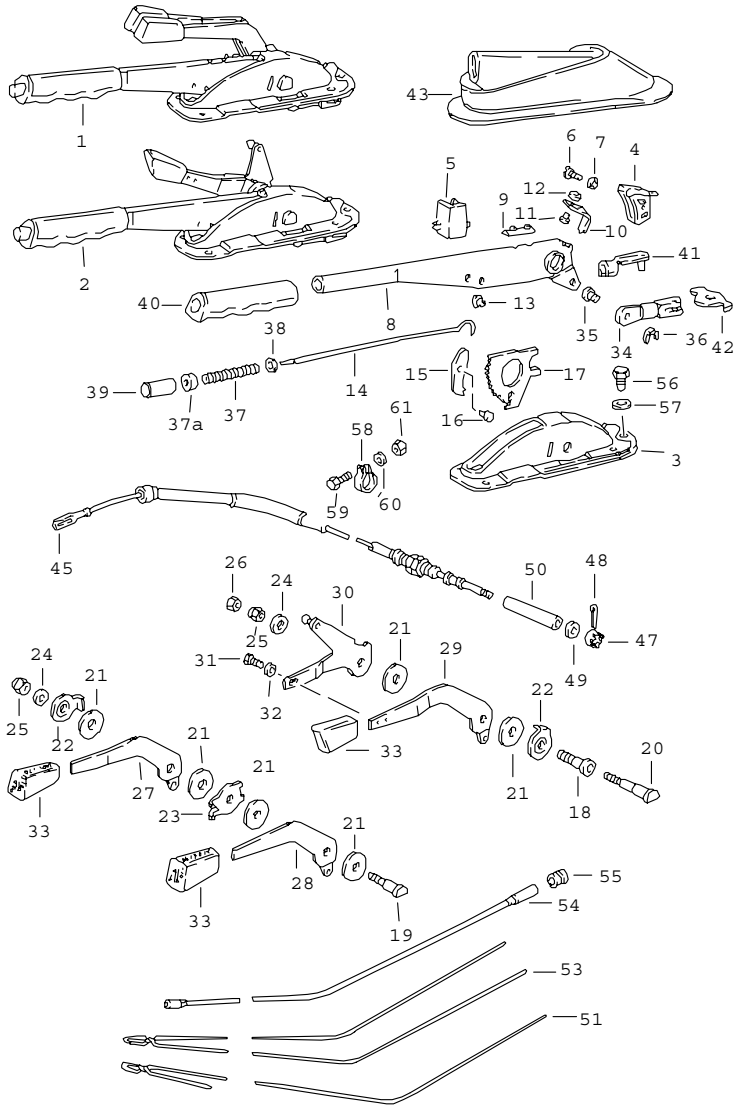

Pos	Part Number	Name	Remarks	Qty	Model
		parking-brake lever actuating lever for heating			
1	911 424 051 08	parking-brake lever with bearing bracket	-81	1	SC
1	911 424 051 13	parking-brake lever with bearing bracket	82-	1	SC
2	A 911 424 051 14	parking-brake lever with bearing bracket heating automatic	-81	1	
2	911 424 051 14	parking-brake lever with bearing bracket heating automatic		1	
3	901 424 058 02	bearing bracket		1	
4	901 613 521 20	contact piece		1	
5	911 613 525 00	heating lever contact		1	SC
6	900 015 025 02	oval-head screw AM 4 X 15		1	
7	900 115 005 02	washer A 4,3		1	
8	911 424 059 00	parking-brake lever		1	
9	901 424 509 01	stop		1	
10	901 613 523 20	contact bow		1	
11	900 055 001 20	rivet		2	
12	900 031 012 10	washer 2,8		2	
13	900 206 003 00	tubular rivet 5 X 0,5 X 10		1	
14	901 424 567 03	push rod		1	
15	901 424 508 00	pawl		1	
16	901 424 511 00	bolt		1	
17	914 424 541 00	locking segment		1	
18	911 424 717 01	tensioning sleeve	82-	1	
18	911 424 717 00	tensioning sleeve		1	TURBO

Pos	Part Number	Name	Remarks	Qty	Model
19	911 424 515 00	bolt		1	SC
20	911 424 519 02	bolt		1	
21	911 424 737 00	washer		4	
22	A 911 424 735 04	lamina		1	
22	911 424 735 04	lamina		1	
23	911 424 735 03	lamina		1	SC
24	999 523 006 00	cup spring		2	
25	999 084 019 02	lock nut		1	
26	999 084 043 02	hexagon nut M 5		1	
27	911 424 711 02	actuating lever		1	SC
28	911 424 711 03	actuating lever		1	SC
29	911 424 711 04	lever for control mechanism	-81	1	
30	911 424 075 00	connecting lever heating automatic	-81	1	
30	911 424 075 02	connecting lever heating automatic	82-	1	
31	A 900 075 276 02	pan-head screw M 5 X 6		1	TURBO
31	900 075 276 02	pan-head screw M 5 X 6		1	TURBO
32	N 012 225 2	spring washer B 5		1	TURBO
33	911 424 792 03	control button		2	
34	901 424 569 01	fork		1	
35	999 166 010 02	bolt A 6 X 16 X 3		1	
36	999 166 008 02	safety clip		1	
37	901 424 543 00	compression spring		1	
37A	914 424 258 00	guide sleeve		1	
38	901 424 593 01	rubber ring		1	
39	901 424 523 01	push button		1	
40	901 424 521 01	handle		1	
41	999 166 001 02	bolt 6 X 24		1	
42	901 424 568 00	compensating piece		1	
43	911 424 591 03	sleeve for parking-brake lever		1	SC
45	911 424 551 02	parking-brake cable		2	SC
45	A 930 424 051 02	parking-brake cable		2	TURBO
45	930 424 051 02	parking-brake cable		2	TURBO
47	900 079 012 02	castle nut M 6		2	
48	A N 012 507 1	cotter pin 1,5 X 15		2	
48	N 012 507 1	cotter pin 1,5 X 15		2	
49	A 900 151 006 09	washer B 6,4		4	
49	N 011 666 7	washer B 6,4		4	
50	901 424 557 01	spacer tube		2	SC
51	A 911 424 701 01	wire pull	/R	1	SC
51	911 424 701 01	wire pull		2	SC
53	911 424 701 02	wire pull heating automatic		1	M 424
54	901 424 704 01	guide		2	
55	914 504 319 00	grommet		2	
56	A 900 075 087 02	hexagon-head bolt M 8 X 16		3	
56	900 075 087 02	hexagon-head bolt M 8 X 16		3	
57	A 900 027 015 02	lock ring B 8		3	

Pos	Part Number	Name	Remarks	Qty	Model
57	900 027 015 02	lock ring B 8		3	
58	999 706 009 80	suspension strap	-82	1	
59	900 075 057 02	hexagon-head bolt M 6 X 16	-82	1	
60	N 011 524 7	washer	-82	1	
61	900 076 010 02	hexagon nut M 6	-82	1	
		- -- E N D -- -			

Pos	Part Number	Name	Remarks	Qty	Model

Model	Year	MG	SG	Illustration	Restrictions	Update			
911	83	7	02	702-00		203	11:22	18.08.2006	PORSCHE PET PORSCHE

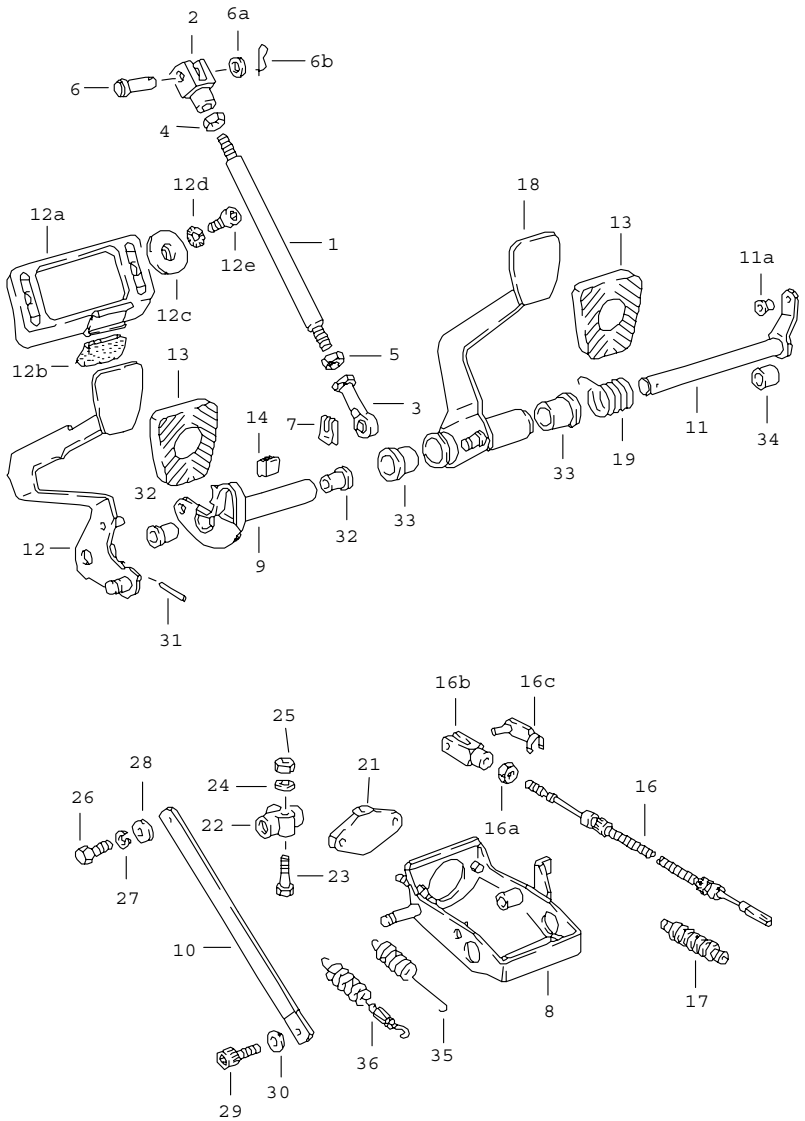

Pos	Part Number	Name	Remarks	Qty	Model
		pedals	/LL		
1	911 423 523 01	push rod		1	
2	999 166 039 02	clevis		1	
3	999 593 116 02	swivel head		1	
4	900 157 002 02	hexagon nut M 10		1	
5	900 157 003 02	hexagon nut M 10		1	
6	900 087 037 02	bolt 10 H 11 X 28 X 23,5		1	
6A	900 031 005 02	washer 10,5		1	
6B	999 021 001 07	connector		1	
7	999 166 034 02	sl-lock		1	
8	911 423 065 04	bearing bracket		1	
9	911 423 062 00	bearing tube		1	
(9)	925 423 035 00	bearing tube		1	SC/SPM
10	911 423 082 00	strut		1	
11	930 423 027 01	clutch pedal shaft		1	SC
(11)	930 423 027 04	clutch pedal shaft		1	TURBO
11A	901 423 343 00	bush		1	
12 A	911 423 077 05	clutch pedal	-81	1	
12	911 423 077 05	clutch pedal		1	
12A	901 423 036 00	stop		1	
12B	901 423 391 00	rubber stop		1	
12C	901 423 368 00	washer		2	
12D	N 012 130 2	shake-proof washer		2	TURBO
12E	900 119 025 02	pan-head screw M 5X15		2	
13	914 423 210 00	rubber pad		2	
13	905 423 511 00	rubber pad		1	SC/SPM
14	911 423 391 02	protective strip		1	

Pos	Part Number	Name	Remarks	Qty	Model
16	930 423 401 06	clutch cable F >>93088 00190 F >>93087 09547		1	TURBO
16	930 423 401 05	clutch cable F 93088 00191>> F 93087 09548>>		1	
16	930 423 401 05	clutch cable		1	SC
16A	900 076 010 02	hexagon nut M 6		2	
16B	900 166 002 02	clevis G 6 X 24		1	
16C	999 166 001 02	bolt 6 X 24		1	
-	999 512 291 02	hose clamp		1	
17	311 713 269 A	sealing sleeve		1	
18	911 423 053 05	brake pedal		1	
18	925 423 053 01	brake pedal		1	SC/SPM
19	911 423 531 03	return spring		1	
21	911 423 153 00	cover plate	-79	1	
22	914 355 667 00	distributor		1	
23	900 075 341 02	screw M 6 X 25		1	
24	N 011 524 7	washer		1	
25	900 076 010 02	hexagon nut M 6		1	
26	N 010 253 7	hexagon-head bolt M 10 X 22		1	
27	900 027 016 02	lock ring B 10		1	
28	900 025 008 09	washer 10,5		1	
29	900 067 063 02	pan-head screw M 10 X 20		1	
30	999 523 103 02	lock washer 10		1	
31	900 309 002 00	roll pin 6 X 28		1	
32	911 423 341 01	bush		2	
33	911 423 542 00	bush		2	
34	911 423 219 03	spacer sleeve		1	
35	911 423 305 06	return spring		1	SC
36	930 423 005 00	clutch spring		1	TURBO

- -- E N D -- -

Model	Year	MG	SG	Illustration	Restrictions	Update				
911	83	7	02	702-10		203	11:22	18.08.2006	PORSCHE	PET	PORSCHE

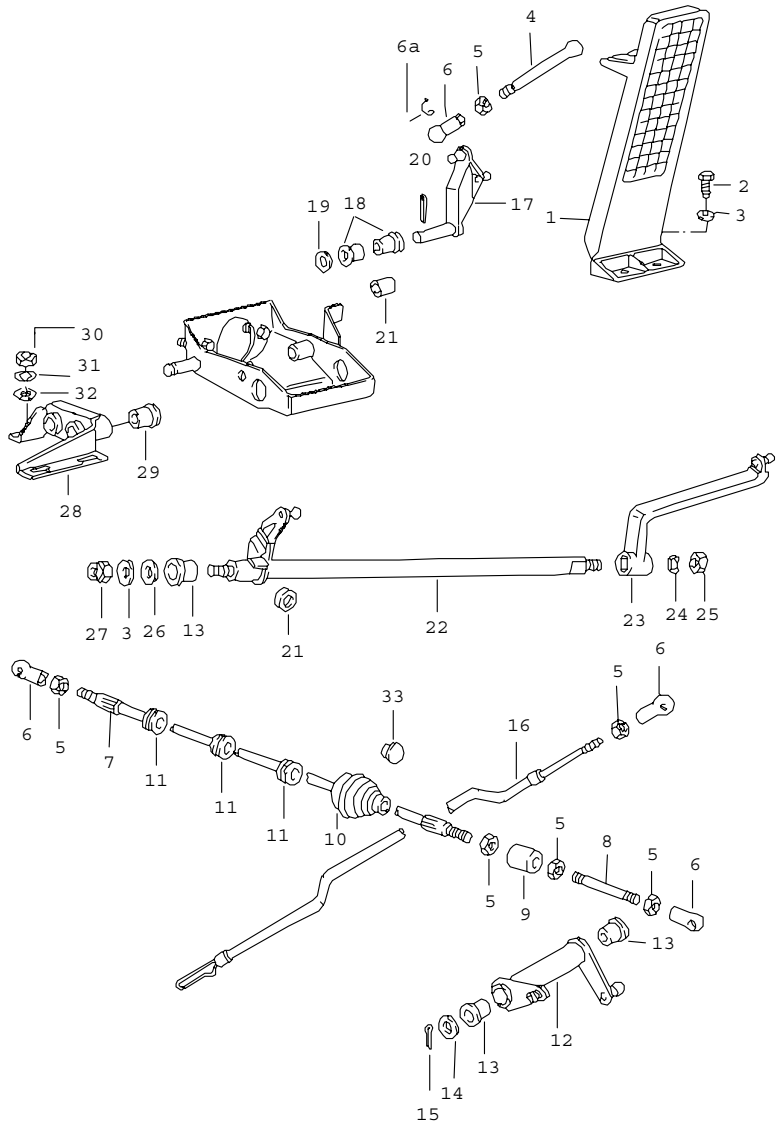

Pos	Part Number	Name	Remarks	Qty	Model
		pedals accelerator control			
1	911 423 111 02	accelerator pedal		1	
2	N 010 215 13	hexagon-head bolt M 6 X 15		2	
3	N 011 666 7	washer B 6,4		2	
4	914 423 227 00	push rod		1	
5	A 900 076 027 02	hexagon nut M 5		6	
5	N 011 005 14	hexagon nut M 5		6	
6	911 423 147 00	ball socket		4	
6A	900 169 014 02	securing clip		1	
7	PCG 423 024 00	throttle linkage		1	
8	901 423 223 01	extension rod		1	
9	911 423 081 02	housing		1	
10	911 423 593 01	sealing sleeve		1	
11	901 423 227 00	bush		3	
12	A 911 423 017 01	reverse lever use also: 911.423.227.00 900.910.096.02		1	SC
12	911 423 017 01	reverse lever use also: 911.423.227.00 900.910.096.02		1	SC
(12)	930 423 017 01	reverse lever		1	TURBO
13	914 423 211 00	bush		2	
14	A 900 025 008 02	washer 10,5		1	
14	900 025 008 09	washer A 10,5		1	
15	N 012 530 1	cotter pin 3,2 X 15		1	
16	911 423 043 00	throttle linkage		1	SC

Pos	Part Number	Name	Remarks	Qty	Model
(16)	930 423 019 02	throttle linkage		1	TURBO
(16)	925 423 026 01	throttle linkage		1	SC/SPM
17	901 423 250 02	reverse lever		1	
18	901 423 253 00	bearing sleeve		2	
19	900 025 007 02	washer 8,4		1	
20	900 021 008 00	cotter pin		1	
21	901 423 193 00	rubber stop		1	
33	A 999 703 005 40	plug clutch tube		1	SC/SPM
33	999 703 058 40	cap plug for clutch tube		1	SC/SPM
		- -- E N D -- -			

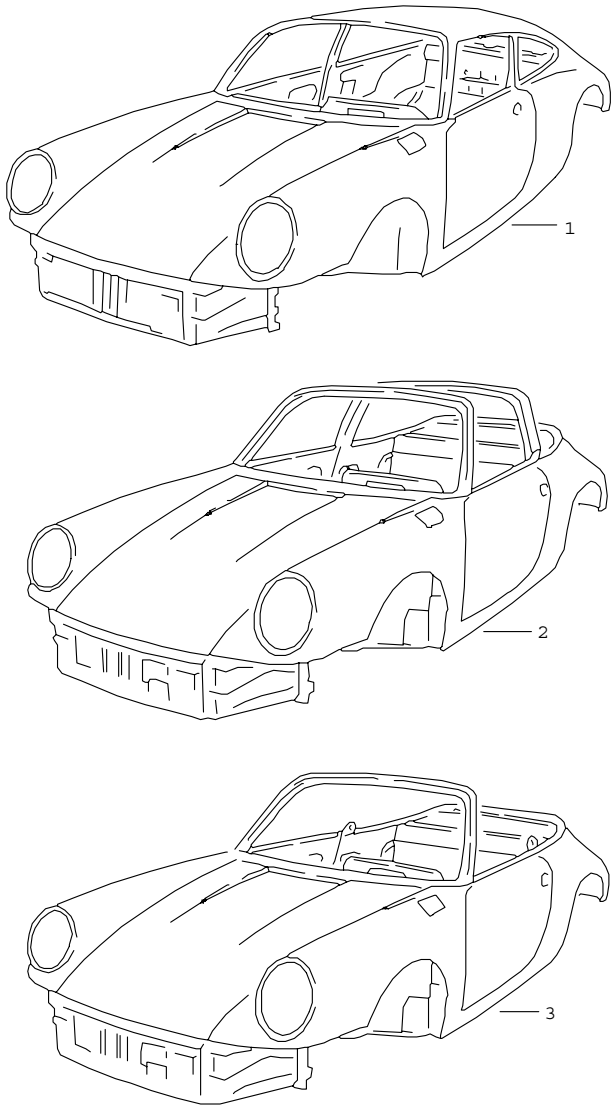

Pos	Part Number	Name	Remarks	Qty	Model
		body in white prime coated sealed with underbody protection bodyshells can only be delivered of the			
1	911 500 921 27	body in white	/LL	1	CARRERA COUPE
(1)	930 500 921 06	body in white	/LL	1	TURBO COUPE
2	911 500 921 64	body in white	/LL	1	TARGA
3	911 500 921 67	body in white	/LL	1	CABRIO
		- -- E N D -- -			

Model	Year	MG	SG	Illustration	Restrictions	Update	11:23	18.08.2006	PORSCHE PET PORSCHE
911	83	8	01	801-05		203			

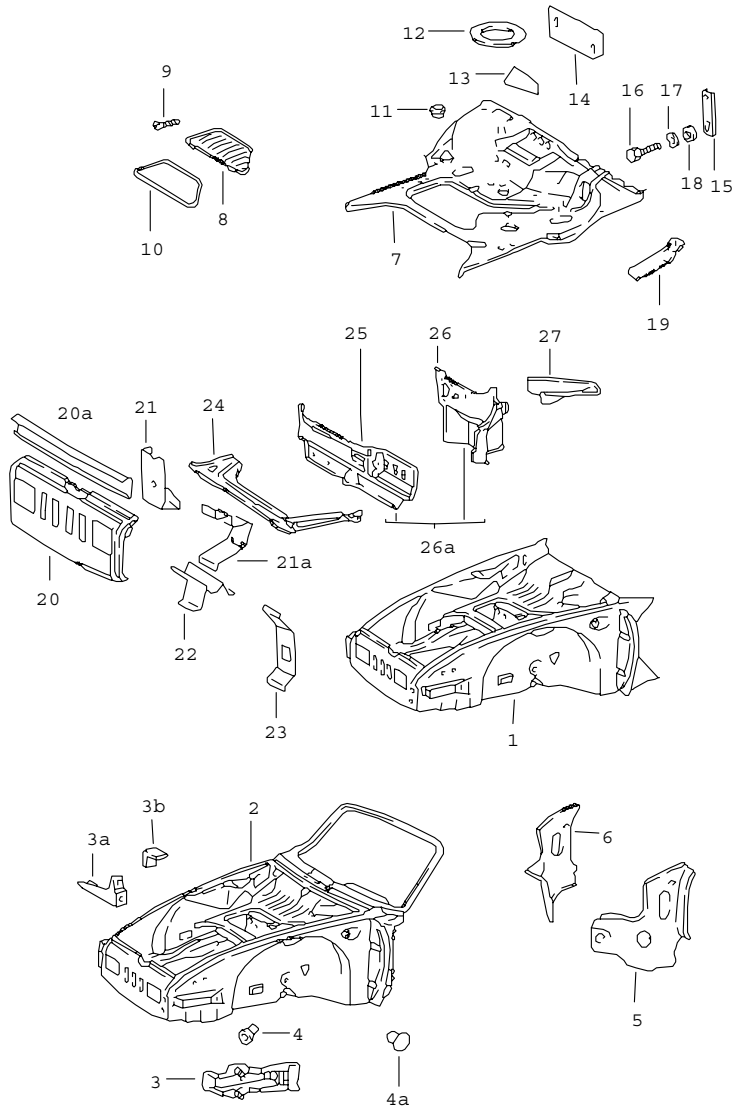

Pos	Part Number	Name	Remarks	Qty	Model
		frame front			
1	A 911 501 005 31	body front section see technical information NR. 19	/LL	1	SC COUPE
(1)	930 501 005 06	body front section see technical information NR. 19	/LL	1	TURBO
2	911 501 005 50	body front section	/LL	1	TARGA/ CABRIO
3	A 911 501 149 00	support	/L	1	
3	911 501 149 02	support impact absorber	/L	1	
(3)	A 911 501 150 00	support	/R	1	
(3)	911 501 150 02	support impact absorber	/R	1	
4	111 971 911 A	rubber sleeve 15 $		1	
4A	999 702 126 50	grommet	80-	2	SC
5	901 501 917 43	gusset plate	/LL/L	1	TARGA/ CABRIO
6	901 501 918 43	gusset plate	/LL/R	1	TARGA/ CABRIO
7	911 501 035 13	boot floor plate	/LL	1	
8	A 901 504 043 02	cover	/LL	1	
8	911 504 043 01	cover	/LL	1	
9	A 900 144 034 07	tapping screw		4	
9	900 144 034 07	tapping screw B 4,2 X 16		4	
10	911 504 491 02	gasket	/LL	1	
11	999 703 103 40	plug 23,5 $		1	
12	911 504 405 00	covering		1	
15	911 501 347 00	cowl panel support	/LL	1	
16	900 075 260 02	hexagon-head bolt M 6 X 16		2	

Pos	Part Number	Name	Remarks	Qty	Model
17	N 012 006 4	lock ring B 6		2	
18	A N 011 524 7	washer		2	
18	N 011 524 7	washer 6,4		2	
19	A 911 501 411 00	connecting piece	/L	1	SC COUPE
19	901 501 411 21	connecting piece boot floor plate wheel housing	/L	1	SC COUPE
(19)	901 501 412 21	connecting piece boot floor plate wheel housing	/R	1	SC COUPE
(19)	901 501 411 41	connecting piece boot floor plate wheel housing	/L	1	TARGA/ CABRIO
(19)	901 501 412 41	connecting piece boot floor plate wheel housing	/R	1	TARGA/ CABRIO
20	A 911 501 099 04	cross panel		1	
20	911 501 099 06	cross panel		1	
(20)	911 501 099 07	cross panel		1	M 559
20A	911 501 395 00	sealing rail		1	
21	911 501 397 00	support jack	/R	1	
21A	911 501 387 01	support jack centre		1	
22	911 501 273 00	mounting water pump	-79	1	SC M 559
23	911 501 275 00	support water pump	-79	1	SC M 288
24	911 501 117 02	fuel tank support holder		1	
25	A 911 501 213 01	cross panel	/LL	1	
25	901 501 041 35	cross panel	/LL	1	
26	901 501 043 33	wall	/LL	1	
27	901 501 354 32	cup	/LL	1	
		- -- E N D -- -			

Model	Year	MG	SG	Illustration	Restrictions	Update	11:23	18.08.2006	PORSCHE PET PORSCHE
911	83	8	01	801-10		203			

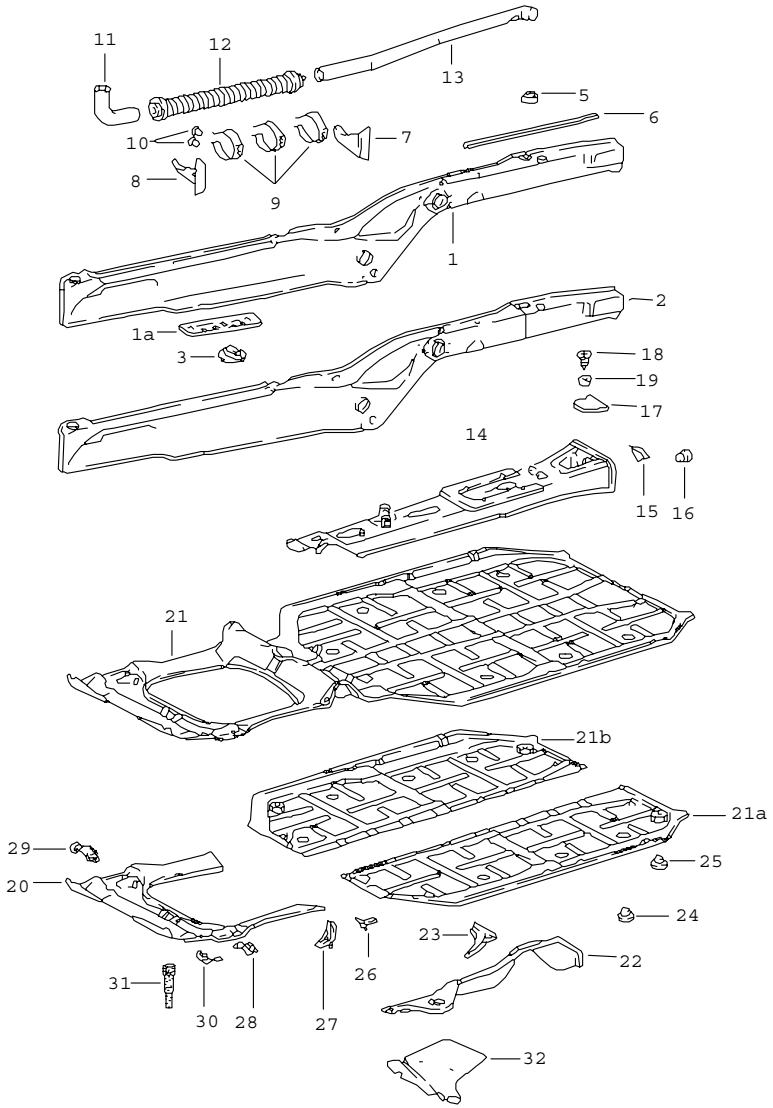

Pos	Part Number	Name	Remarks	Qty	Model
		frame centre			
1	A 911 501 962 26	side member inner	/R	1	COUPE
(1)	A 911 501 962 46	side member	/R	1	TARGA
(1)	901 501 962 43	side member inner	/R	1	
(1)	A 911 501 961 25	side member inner	/L	1	COUPE
(1)	A 911 501 961 45	side member	/L	1	TARGA/
(1)	901 501 961 43	side member inner	/L	1	
1A	A 911 501 266 00	seat rail support	/R	1	
1A	911 501 268 02	seat rail support outer	/R	1	
(1A)	A 911 501 265 00	seat rail support	/L	1	
(1A)	911 501 267 02	seat rail support outer	/L	1	
2	911 501 962 03	side member inner sub-part	/R	1	
(2)	A 911 501 961 03	side member	/L	1	
(2)	911 501 961 05	side member inner sub-part	/L	1	
3	111 801 177	rubber valve		3	
5	901 501 117 20	plate		2	
6	901 501 796 20	rail	/R	1	SC
(6)	930 501 792 00	rail	/R	1	TURBO
(6)	901 501 795 20	rail	/L	1	SC
(6)	930 501 791 00	rail	/L	1	TURBO
7	901 501 263 20	bracket		2	
8	901 501 264 20	bracket		2	
9	901 501 128 20	retainer spring		6	
10	A N 013 411 1	rivet		12	

Pos	Part Number	Name	Remarks	Qty	Model
10	N 013 411 1	rivet 3 X 6		12	
11	A 911 572 211 01	hot air duct		2	
11	911 572 211 01	hot air duct		2	
(12)	911 572 025 02	muffler		2	
13	A 911 572 024 00	hot air duct	/R	1	
13	911 572 222 02	hot air duct	/R	1	
(13)	A 911 572 221 02	hot air duct	/L	1	
(13)	911 572 221 02	hot air duct	/L	1	
14	911 501 061 47	tunnel with tubes	/LL	1	
(14)	911 501 062 46	tunnel with tubes	/RL	1	
15	911 501 661 00	reinforcement	/L	1	
(15)	911 501 662 00	reinforcement	/R	1	
16	A 914 552 233 10	filler piece		1	SC
16	914 552 233 10	filler piece		1	SC
	01C	black 10 $			
17	901 504 731 30	cover		1	
18	900 143 019 07	oval-head sheetmetal screw B 4,8 X 22		4	
19	900 031 006 07	washer 5,3		4	
-	999 591 329 02	speed nut B 4,8		4	
(20)	911 501 955 00	tank compartment floor		1	
21A	911 501 935 00	floorpan	/LL/L	1	
21B	911 501 936 00	floorpan	/LL/R	1	
21	911 501 051 12	floorpan	/LL 83	1	SC
21	930 501 051 04	floorpan	/LL	1	TURBO
21	911 501 052 12	floorpan	/RL	1	SC
21	930 501 052 05	floorpan	/RL	1	TURBO
22	911 501 111 02	fuel tank support holder	/L	1	
(22)	911 501 114 04	fuel tank support holder	/R	1	
23	901 501 457 20	bracket	/L	1	
(23)	901 501 458 20	bracket	/R	1	
24	999 703 121 40	plug 8 $		20	
25	999 703 125 40	plug 8,9 $		4	
26	901 501 063 23	bracket		2	
27	901 501 359 01	axle mounting	/V/L	1	SC
(27)	930 501 359 01	axle mounting	/V/L	1	TURBO
(27)	901 501 360 01	axle mounting	/V/R	1	SC
(27)	930 501 360 01	axle mounting	/V/R	1	TURBO
28	901 501 409 23	reinforcement plate	/L	1	
(28)	901 501 410 23	reinforcement plate	/R	1	
29	901 501 427 20	reinforcement axle mounting		2	
30	901 501 407 22	corner reinforcement	/L	1	
(30)	901 501 408 22	corner reinforcement	/R	1	
31	911 025 612 00	grommet		2	
32	911 501 285 00	carrier plate for battery		1	
		- -- E N D -- -			

Model	Year	MG	SG	Illustration	Restrictions	Update	11:23	18.08.2006	PORSCHE PET PORSCHE
911	83	8	01	801-15		203			

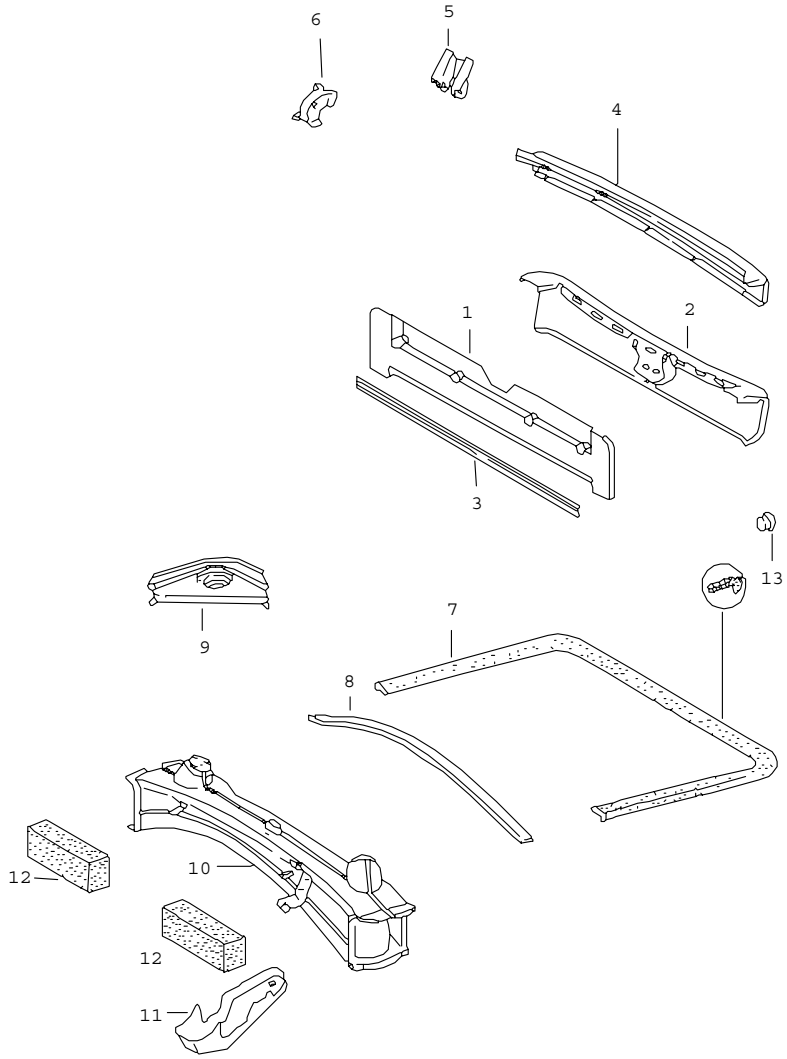

Pos	Part Number	Name	Remarks	Qty	Model
		frame rear			
1	A 911 501 830 01	cross member		1	SC
(1)	911 507 080 00	cross member		1	SC
(1)	A 930 501 085 00	cross member		1	TURBO
(1)	930 501 080 00	cross member		1	TURBO
2	A 901 501 087 22	cross member		1	SC
(2)	911 507 080 00	cross member		1	SC
(2)	A 930 501 086 00	cross member		1	TURBO
(2)	930 501 080 00	cross member		1	TURBO
3	901 501 797 20	rail it is necessary to rework		1	SC TURBO
(3)	A 901 501 797 20	rail		1	TURBO
4	911 503 151 00	end plate		1	
5	A 911 501 729 00	bracket	-82	2	
5	911 501 729 01	pneumatic spring mount		2	
6	911 501 041 00	bearing		1	COUPE/TARGA
6	911 501 041 60	bearing		1	CABRIO
7	911 504 111 02	engine compartment seal		1	SC
(7)	930 504 170 01	engine compartment seal		1	TURBO
8	911 504 113 02	engine compartment seal		1	SC
(8)	911 504 115 02	engine compartment seal	-80	1	TURBO
(8)	911 504 115 02	engine compartment seal	81-	1	TURBO
9	901 501 083 21	engine mounting		2	
10	A 911 501 075 06	cross member		1	
10	911 501 075 07	cross member		1	
11	911 501 023 02	bracket fuel pump		1	TURBO
12	911 504 930 00	strap		2	
13	999 703 098 40	cap plug 19 $		2	

Model	Year	MG	SG	Illustration	Restrictions	Update			
911	83	8	01	801-15		203	11:23	18.08.2006	PORSCHE PET PORSCHE

Pos	Part Number	Name	Remarks	Qty	Model	Pos	Part Number	Name	Remarks	Qty	Model
		- -- E N D -- -									

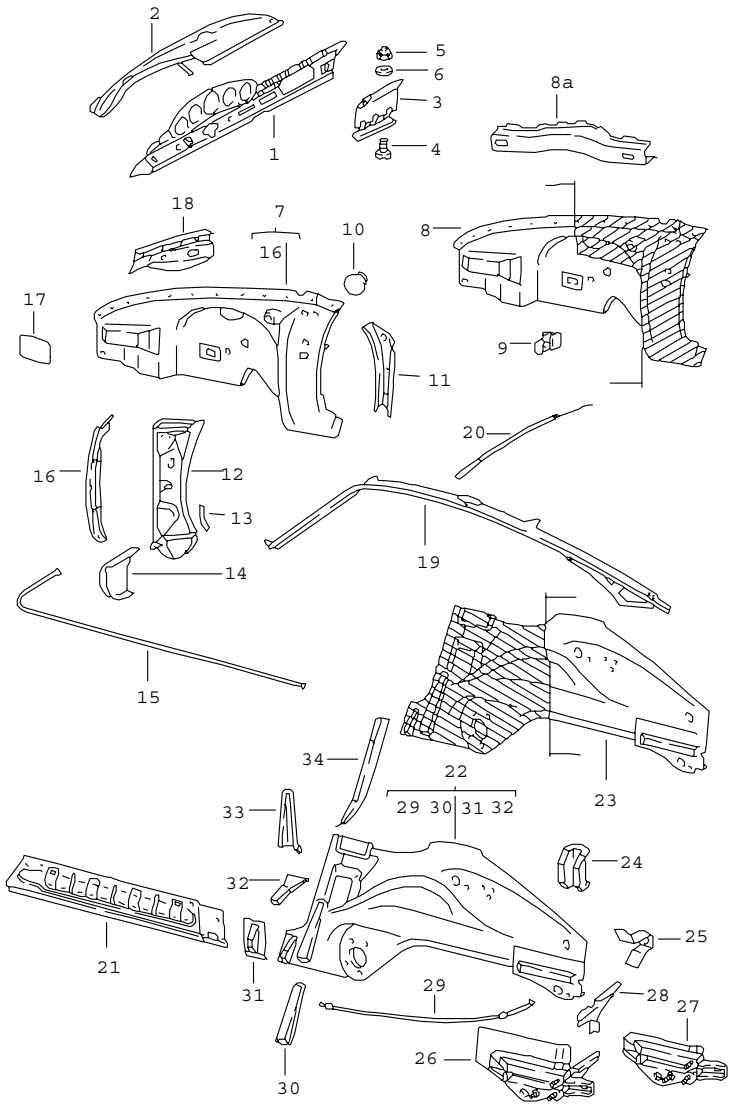

Pos	Part Number	Name	Remarks	Qty	Model
		interior panelling			
1	911 502 021 02	dashboard lower part	/LL	1	
2	A 911 502 025 40	dashboard	/LL	1	
2	901 502 023 44	dashboard upper part	/LL	1	
3	A 911 552 010 02	glove box cover		1	
3	911 552 010 04	glove box cover		1	
4	900 146 003 02	oval-head screw AM 5 X 10		2	
5	A N 021 196 1	lock nut		4	
5	N 021 196 1	lock nut M 5		4	
6	A 900 025 003 02	washer		4	
6	900 025 003 02	washer 5,3		4	
7	911 501 967 00	wheel housing	/L	1	
(7)	911 501 968 00	wheel housing	/R	1	
8	A 911 501 995 02	wheel housing	/L	1	
8	911 501 967 02	wheel housing	/L	1	
(8)	A 911 501 996 02	wheel housing	/R	1	
(8)	911 501 968 02	wheel housing without POS. 12,16,18 see group 8/01/05 POS. 19	/R	1	
8A	911 501 675 00	reinforcing support		1	
9	901 501 419 00	plate brake hose		2	
10	999 703 031 40	plug 30 $		2	
11	901 501 217 21	post bracket	/L	1	COUPE
(11)	901 501 218 21	post bracket	/R	1	COUPE
12	911 501 039 02	hinge pillar	/L	1	

Pos	Part Number	Name	Remarks	Qty	Model
(12)	911 501 040 02	hinge pillar	/R	1	
13	901 501 305 20	angular bracket	/L	1	
(13)	901 501 306 20	angular bracket	/R	1	
14	911 501 439 00	filler plate	/L	1	
(14)	911 501 440 00	filler plate	/R	1	
15	911 502 181 00	guide tube lid-release cable		1	COUPE
16	911 501 053 00	wing joining plate	/L	1	
(16)	911 501 054 00	wing joining plate	/R	1	
17	911 504 101 00	cover plate		2	
18	A 911 501 223 01	reinforcing support	/L	1	
18	911 501 223 02	reinforcement bracket	/L	1	
(18)	911 501 226 01	reinforcing support	/R	1	
19	911 502 029 00	roof frame	/L	1	COUPE
(19)	911 502 030 00	roof frame	/R	1	COUPE
20	911 502 220 00	cross piece for windscreen		1	
21	911 501 123 03	side member	/L	1	
(21)	911 501 124 03	side member	/R	1	
22	A 911 501 017 20	side member	/L	1	COUPE
22	911 501 017 21	side member wheel housing	/L	1	COUPE
23	A 911 501 997 02	side member	/L	1	COUPE
23	911 501 997 03	side member	/L	1	COUPE
(22)	911 501 018 30	side member wheel housing	/R	1	COUPE
(23)	911 501 998 02	side member	/R	1	COUPE
24	911 501 115 00	reinforcement		2	
25	911 501 125 00	support		6	
26	A 911 501 921 01	mounting	/L	1	
(26)	A 911 501 922 00	mounting	/R	1	
27	911 501 167 00	mounting	/L -82	1	
27	911 501 167 03	mounting	/L 83-	1	
(27)	911 501 168 00	mounting	/R	1	
28	911 501 313 00	corner reinforcement	/L	1	
(28)	911 501 314 00	corner reinforcement	/R	1	
29	911 502 483 00	guide tube lid-release cable		1	
30	901 501 145 23	bracket	/L	1	
(30)	901 501 146 23	bracket	/R	1	
31	901 501 151 22	mounting		1	
32	911 501 195 00	jacking point		1	
33	A 901 501 141 21	bracket	/L	1	COUPE
(33)	911 501 823 00	bracket	/L	1	COUPE
(33)	A 901 501 142 21	bracket	/R	1	COUPE
(33)	911 501 824 00	bracket	/R	1	COUPE
34	901 502 245 00	profile	/L	1	COUPE
(34)	901 502 246 00	profile	/R	1	COUPE

- -- E N D -- -

Model	Year	MG	SG	Illustration	Restrictions	Update	11:23	18.08.2006	PORSCHE PET PORSCHE
911	83	8	01	801-25		203			

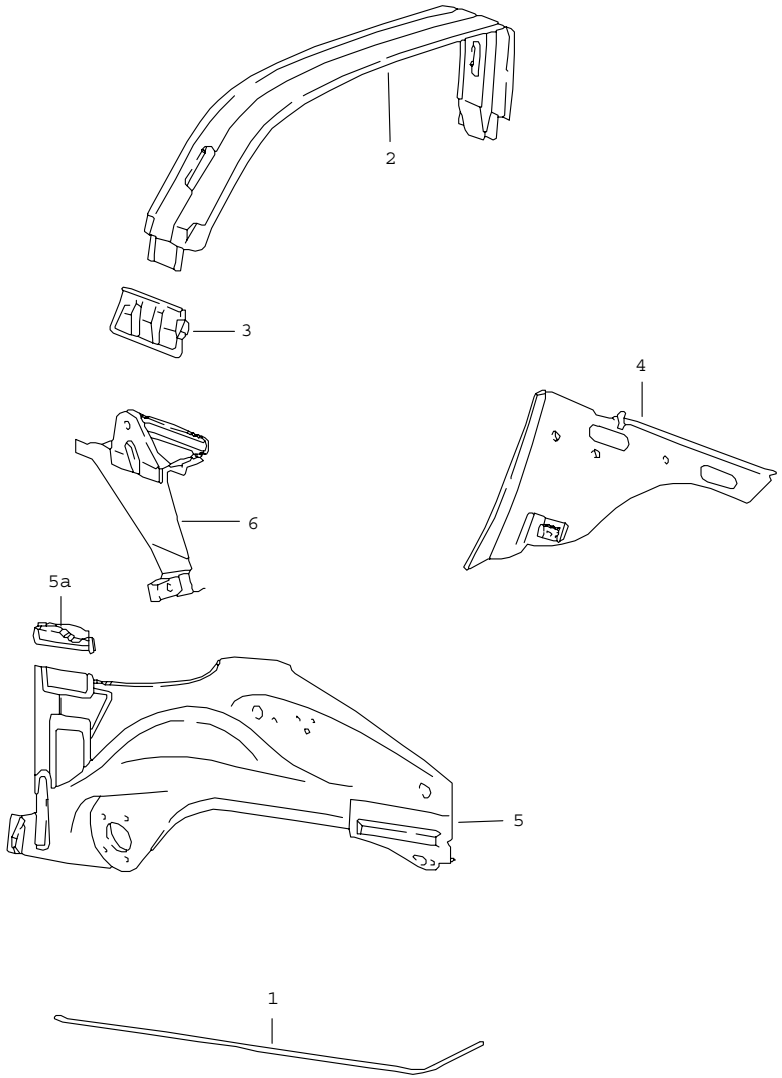

Pos	Part Number	Name	Remarks	Qty	Model
		interior panelling	O		+TARGA/CABRI
1	911 502 181 40	guide tube lid-release cable	/V	1	
2	911 565 001 40	roll bar		1	TARGA
3	911 501 203 40	filler plate	/L	1	TARGA
(3)	911 501 204 40	filler plate	/R	1	TARGA
4	911 501 205 41	interior panel	/L	1	TARGA
(4)	911 501 205 60	interior panel	/L	1	CABRIO
(4)	911 501 206 41	interior panel	/R	1	TARGA
(4)	911 501 206 60	interior panel	/R	1	CABRIO
5	A 911 501 017 56	side member	/L	1	TARGA
5	911 501 017 57	side member wheel housing	/L	1	TARGA
(5)	A 911 501 017 60	side member	/L	1	CABRIO
(5)	911 501 017 61	side member wheel housing	/L	1	CABRIO
(5)	911 501 018 70	side member wheel housing	/R	1	TARGA
(5)	911 501 018 60	side member wheel housing	/R	1	CABRIO
5A	911 501 465 60	insert	/L	1	CABRIO
(5A)	911 501 466 60	insert	/R	1	CABRIO
6	911 501 431 60	convertible top support	/L	1	CABRIO
(6)	911 501 432 60	convertible top support	/R	1	CABRIO
		- -- E N D -- -			

Model	Year	MG	SG	Illustration	Restrictions	Update	11:24	18.08.2006	PORSCHE PET PORSCHE
911	83	8	01	801-30		203			

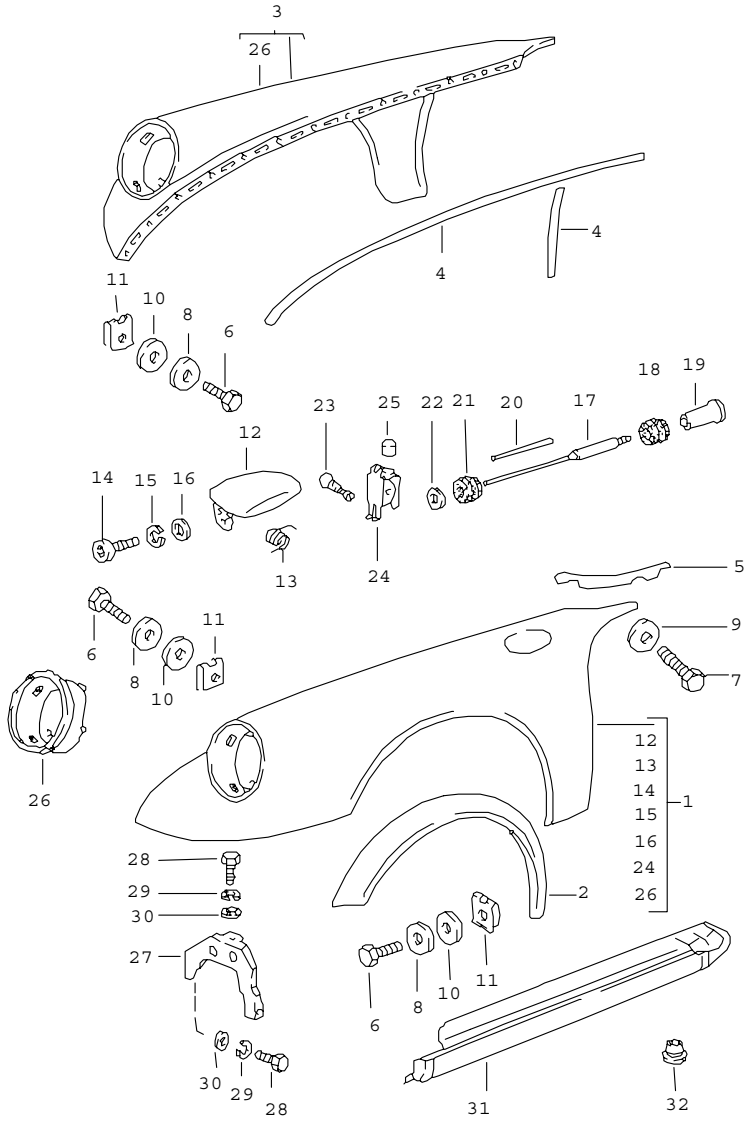

Pos	Part Number	Name	Remarks	Qty	Model
		exterior panelling front			
1	A 911 503 031 05	wing	/L -82	1	SC
1	A 911 503 031 07	wing	/L 83	1	SC
1	911 503 031 10	wing order also:	/L	1	SC
-	911 201 077 02	expansion tank		1	
1	A 930 503 031 09	wing with POS.2	/L	1	TURBO
1	930 503 031 11	wing with POS.2	/L	1	TURBO
2	930 503 307 00	wing joining plate	/L	1	TURBO
(2)	930 503 308 00	wing joining plate	/R	1	TURBO
3	A 911 503 032 02	wing	/R	1	SC
3	911 503 032 05	wing	/R	1	SC
3	930 503 032 09	wing with POS.(2)	/R	1	TURBO
4	000 043 129 00	sealing strap 25 X 2 MM		*	
5	901 503 394 22	piping		2	
6	900 187 010 02	tapping screw BZ 6,3 X 19		32	
7	N 010 217 9	hexagon-head bolt M 6 X 20		4	
(7)	A 900 067 011 02	pan-head screw		4	
(7)	900 067 011 02	pan-head screw M 6 X 20		4	
8	N 011 666 7	washer B 6,4		32	
9	A N 011 550 1	washer		4	
9	N 011 550 1	washer B 6,5		4	
10	999 704 157 40	washer		32	

Pos	Part Number	Name	Remarks	Qty	Model
11	999 591 327 02	speed nut B 6,3		32	
12	911 504 031 00	cover		1	
13	A 911 504 331 00	spring		1	
13	911 504 331 00	spring		1	
14	900 067 051 02	pan-head screw M 5 X 10		3	
15	A N 012 005 3	lock ring		3	
15	N 012 005 3	lock ring B 5		3	
16	900 025 003 02	washer 5,3		3	
17	901 504 317 21	lid-release cable with threaded piece		1	
18	911 504 385 00	rubber washer		1	
19	901 552 822 00	knob		1	
20	901 504 385 20	connecting tube		1	
21	999 702 020 50	rubber sleeve		1	
22	914 504 319 00	grommet		1	
23	999 230 002 02	screw nipple		1	
24	901 504 034 20	bearing		1	
25	911 025 679 00	buffer		1	
26	911 503 015 00	headlamp casing	/L	1	
(26)	911 503 016 00	headlamp casing	/R	1	
27	A 911 503 079 00	wing strut	/L	1	
27	911 503 079 01	wing strut	/L	1	
(27)	911 503 080 00	bracket	/R	1	
28	900 075 087 02	hexagon-head bolt M 8 X 16		4	
29	A 900 027 015 02	lock ring		4	
29	900 027 015 02	lock ring B 8		4	
30	900 025 007 02	washer		4	
31	911 503 401 04	door sill	/L	1	
(31)	911 503 402 04	door sill	/R	1	
32	411 837 111	cap		4	

- -- E N D -- -

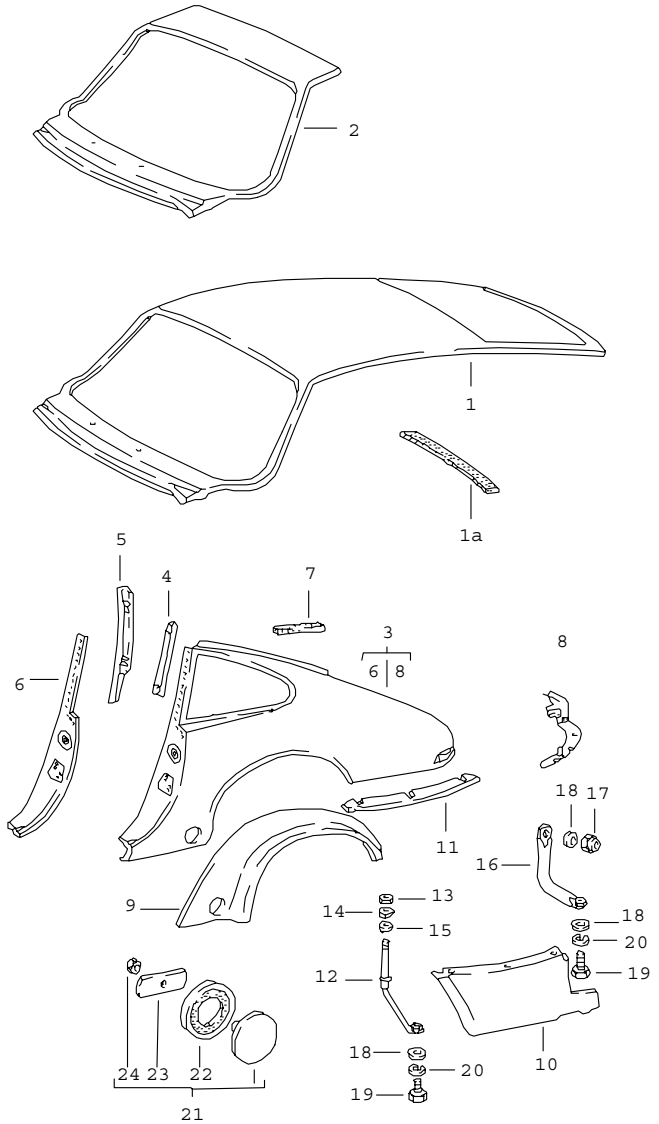

Pos	Part Number	Name	Remarks	Qty	Model
		exterior panelling rear			
1	A 911 503 087 04	outer roof panel		1	COUPE
1	911 503 087 08	outer roof panel order also:		1	COUPE
-	928 628 077 00	nozzle		2	
(1)	A 911 503 087 05	outer roof panel		1	M 650
(1)	911 503 087 09	outer roof panel order also:		1	M 650
-	928 628 077 00	nozzle		2	
1A	911 503 507 01	plastic foam strip bleeding		1	COUPE
2	A 901 503 090 21	windscreen frame part		1	COUPE
2	A 911 503 987 00	windscreen frame part		1	COUPE
2	911 503 987 01	windscreen frame part order also:		1	COUPE
-	928 628 077 00	nozzle		2	
3	A 911 503 061 06	wing	/L	1	COUPE
3	911 503 061 10	side section	/L	1	COUPE
(3)	930 503 061 00	wing with POS.9	/L	1	TURBO
(3)	A 911 503 062 06	wing	/R	1	COUPE
(3)	911 503 062 10	side section	/R	1	COUPE
(3)	A 930 503 062 00	wing	/R	1	TURBO
(3)	930 503 062 01	side section with POS.9	/R	1	TURBO
4	911 503 193 00	retaining strip sealing frame		2	COUPE
5	911 502 043 02	lock pillar inner panel	/L	1	
(5)	911 502 044 02	lock pillar inner panel	/R	1	
6	A 911 502 041 02	lock pillar	/L	1	

Pos	Part Number	Name	Remarks	Qty	Model
6	911 502 041 03	lock pillar	/L	1	
(6)	A 911 502 042 02	lock pillar	/R	1	
(6)	911 502 042 03	lock pillar	/R	1	
7	911 504 933 00	seal wheel housing	/L	1	
(7)	911 504 934 00	seal wheel housing	/R	1	
8	911 503 073 00	bar combined lights	/L	1	
(8)	911 503 074 00	bar combined lights	/R	1	
9	930 503 607 00	welding plate	/L	1	TURBO
(9)	930 503 608 00	welding plate	/R	1	TURBO
10	911 503 067 03	lower part lower part	/L	1	SC
(10)	930 503 067 00	side section lower part	/L	1	TURBO
(10)	911 503 068 03	lower part lower part	/R	1	SC
(10)	930 503 068 00	side section lower part	/R	1	TURBO
11	911 503 185 01	intermediate layer	/L	1	SC
(11)	911 503 186 01	intermediate layer	/R	1	SC
(11)	000 043 204 81	intermediate layer		*	TURBO
12	A 911 501 623 02	support tube	/V	2	
(12)	911 501 623 02	support tube	/V	2	
13	900 078 009 02	hexagon nut M 20 X 1,5		2	
14	900 025 021 02	washer		2	
15	901 501 913 21	sealing ring		2	
16	A 911 501 628 01	support tube	/H	2	
(16)	911 501 628 01	support tube	/H	2	
17	A 900 084 003 02	lock nut		2	
17	900 910 012 02	lock nut M 6		2	
18	A 900 151 006 09	washer		6	
18	N 011 666 7	washer 6,4		6	
19	A 900 074 221 02	hexagon-head bolt		4	
19	999 072 005 09	hexagon-head bolt M 6 X 12		4	
20	N 012 007 2	lock ring A 6		4	
21	901 504 079 00	spring cover		2	
22	901 504 759 01	desk pad		2	
23	901 504 755 20	tensioning spring		2	
24	A 900 076 027 02	hexagon nut		2	
24	N 011 005 14	hexagon nut M 5		2	

- -- E N D -- -

Model	Year	MG	SG	Illustration	Restrictions	Update			
911	83	8	01	801-40		203	11:24	18.08.2006	PORSCHE PET PORSCHE

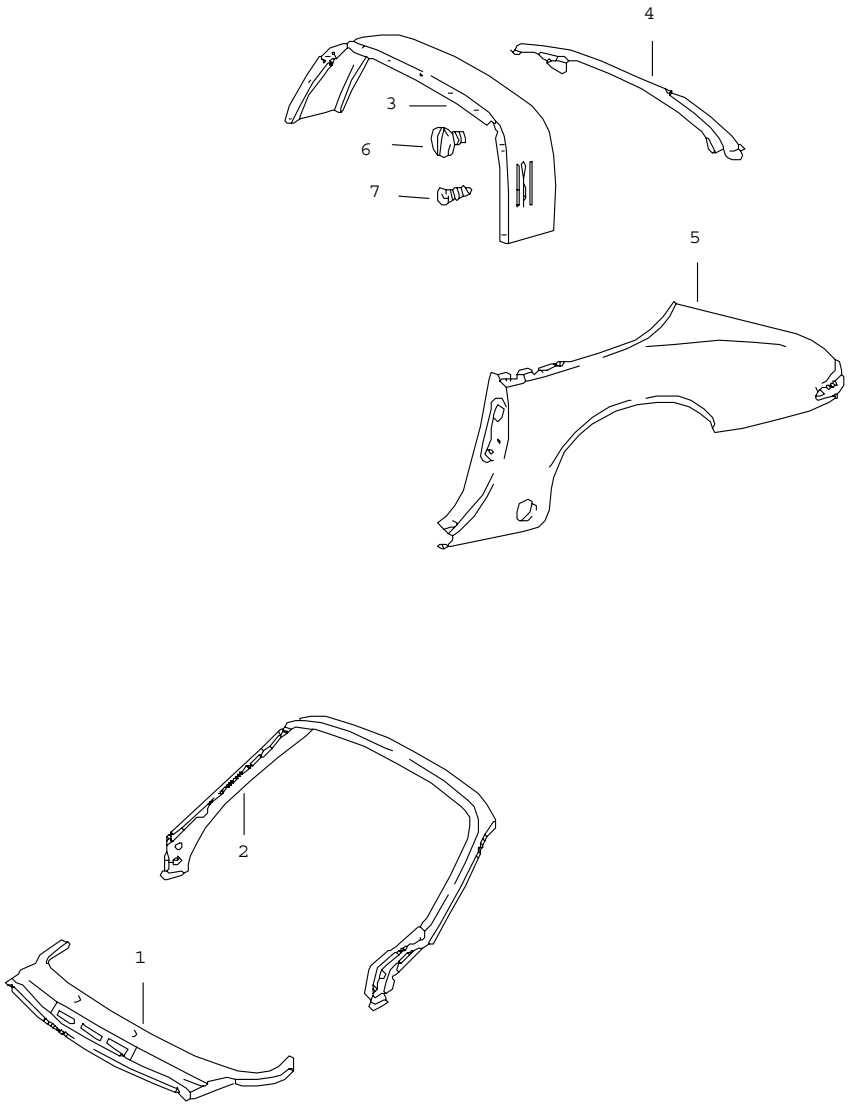

Pos	Part Number	Name	Remarks	Qty	Model
		exterior panelling			TARGA/CABRIO
1	911 503 087 40	scuttle		1	
2	911 599 503 32	windscreen frame		1	
3	911 565 043 48	lining		1	TARGA
4	901 503 322 40	centre part		1	
5	A 911 503 061 46	wing	/L	1	TARGA
5	911 503 061 50	side section	/L	1	TARGA
(5)	A 911 503 061 60	side section	/L	1	CABRIO
(5)	911 503 061 61	side section	/L	1	CABRIO
(5)	911 503 062 50	side section	/R	1	TARGA
(5)	911 503 062 60	side section	/R	1	CABRIO
6	901 801 153 40	screw plug ski rack		4	TARGA
7	N 013 957 5	tapping screw B 3,5 X 9,5		15	TARGA
		- -- E N D -- -			

Model	Year	MG	SG	Illustration	Restrictions	Update	11:24	18.08.2006	PORSCHE PET PORSCHE
911	83	8	02	802-00		203			

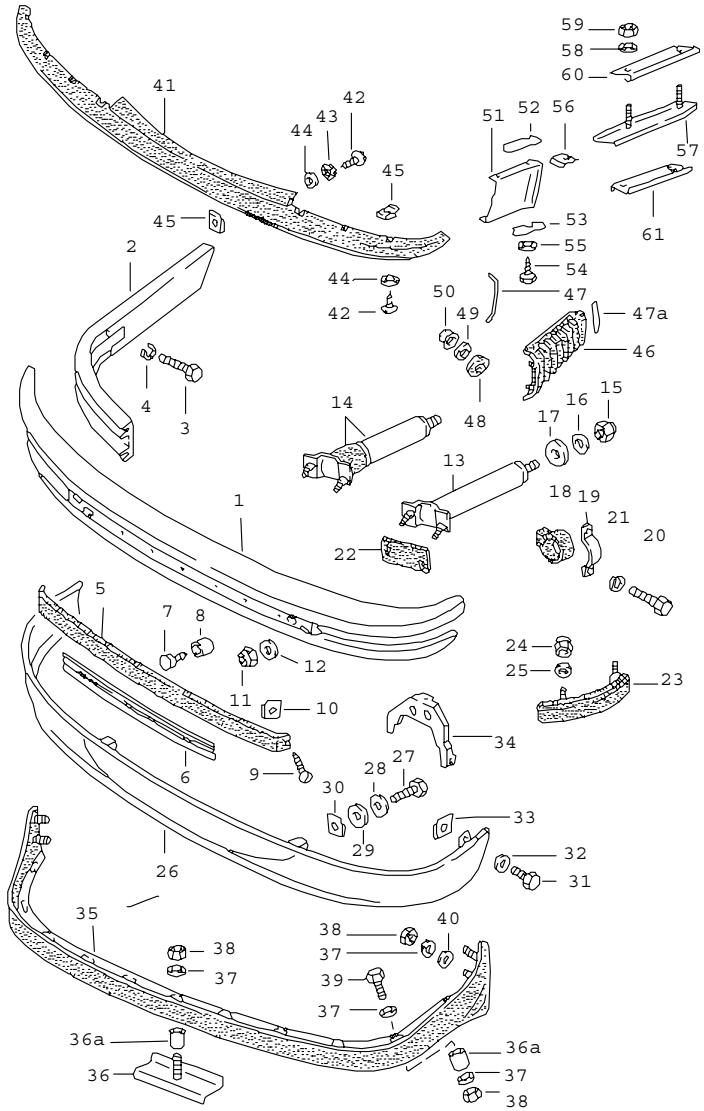

Pos	Part Number	Name	Remarks	Qty	Model
		bumper	/V		
(1)	911 505 011 12	bumper	-81	1	
(1)	911 505 011 13	bumper	-81	1	M 288
(1)	930 505 011 03	bumper	82-	1	
2	911 505 463 00	support for bumper		1	
3	A 900 075 033 02	hexagon-head bolt		4	
3	900 075 033 02	hexagon-head bolt M 8 X 40		4	
4	A 900 027 015 02	lock ring		4	
4	900 027 015 02	lock ring B 8		4	
5	911 505 147 03	protective moulding		1	
6	911 505 149 02	insert protective moulding only together with 911.505.147.03		1	
7	911 505 417 00	plug		7	
8	911 505 418 00	grommet		7	
9	900 143 113 07	tapping screw B 4,2 X 13	-81	2	
9	900 143 085 07	tapping screw B 4,2 X 16	83-	2	
10	999 507 018 02	speed nut		2	
11	N 011 185 6	hexagon nut M 10		4	
12	A 900 025 008 09	washer		4	
12	900 025 008 09	washer 10,5		4	
14	911 505 279 03	impact absorber		2	
(15)	999 084 608 02	hexagon nut M 12		2	M 058
(16)	900 025 009 02	washer 13		2	M 058
(17)	911 505 219 01	desk pad		2	M 058
18	911 505 221 00	stop		2	

Pos	Part Number	Name	Remarks	Qty	Model
19	911 505 223 00	supporting bow		2	
20	999 093 010 02	hexagon-head bolt M 8 X 20		4	
21	A N 012 009 3	lock ring		4	
21	900 027 015 02	lock ring A 8		4	
22	911 505 311 00	desk pad		2	
23	911 505 307 00	cover	/L	1	
(23)	911 505 308 00	cover	/R	1	
24	A N 021 196 1	lock nut		4	
24	N 021 196 1	lock nut M 5		4	
25	A 900 151 027 02	washer		4	
25	N 011 665 3	washer A 5,3		4	
26	911 503 049 00	front embellisher		1	SC
(26)	930 503 049 00	front embellisher		1	TURBO
27	900 187 010 02	tapping screw BZ 6,3 X 19		2	
28	A 900 151 006 09	washer		2	
28	N 011 666 7	washer B 6,4		2	
29	999 704 157 40	washer		2	
30	999 591 327 02	speed nut B 6,3		2	
31	900 187 010 02	tapping screw BZ 6,3 X 19		2	
32	N 011 666 7	washer B 6,4		2	
33	999 591 327 02	speed nut B 6,3		2	
34	911 503 079 01	wing strut	/L	1	
(34)	911 503 080 00	bracket	/R	1	
35	911 503 055 00	front spoiler		1	SC
(35)	930 503 055 01	front spoiler		1	TURBO
36	911 503 023 00	shim		7	
36A	911 503 349 00	spacer sleeve		11	
37	N 011 666 7	washer B 6,4		11	
38	A 900 084 010 02	hexagon nut		11	
38	900 910 012 02	lock nut M 6		11	
39	N 010 217 9	hexagon-head bolt M 6 X 20		4	
40	901 565 448 40	spacer		4	
41	911 505 187 01	sealing strip		1	
42	N 013 968 7	tapping screw B 4,8 X 13		12	
43	901 503 399 02	rubber washer		4	
44	A 900 151 027 02	washer		12	
44	N 011 665 3	washer A 5,3		12	
45	A 999 507 041 09	speed nut		12	
45	999 507 041 09	speed nut B 4,8		12	
46	911 799 505 63	bellows	/L	1	
(46)	911 799 505 64	bellows	/R	1	
47	911 505 375 00	clamp		2	
47A	930 503 329 00	desk pad	/L	1	TURBO
(47A)	930 503 330 00	desk pad	/R	1	TURBO
48	901 511 791 21	rubber washer		8	
49	900 025 003 02	washer A 5,3		8	
50	900 910 009 02	lock nut NM 5		8	
51	911 503 315 00	front embellisher	/L	1	SC
(51)	911 503 316 00	front embellisher	/R	1	SC

Pos	Part Number	Name	Remarks	Qty	Model	Pos	Part Number	Name	Remarks	Qty	Model
52	911 503 326 00	intermediate layer upper		2	SC						
53	911 503 325 00	intermediate layer lower		2	SC						
54	A 900 187 004 02	hexagon-head tapping screw		8							
54	900 187 004 02	hexagon-head tapping screw B 4,8 X 19		8							
55	N 011 665 3	washer A 5,3		8							
56	999 507 041 09	speed nut B 4,8		8							
57	930 503 131 00	plate with screw bolt	/L	1	TURBO						
(57)	930 503 132 00	plate with screw bolt	/R	1	TURBO						
58	N 011 665 3	washer B 5,3		4							
59	N 011 005 14	hexagon nut M 5		4							
60	A 930 503 197 00	piping		2							
60	930 503 197 00	piping		2							
61	930 503 327 01	plate with pressed-in hole		2							
		number plate mount									
-	911 701 057 01	set of fastening parts number plate front and rear (USA)(CDN)(J)(AUS)(A)		1							
		- -- E N D -- -									

Model	Year	MG	SG	Illustration	Restrictions	Update	11:24	18.08.2006	PORSCHE PET PORSCHE
911	83	8	02	802-05		203			

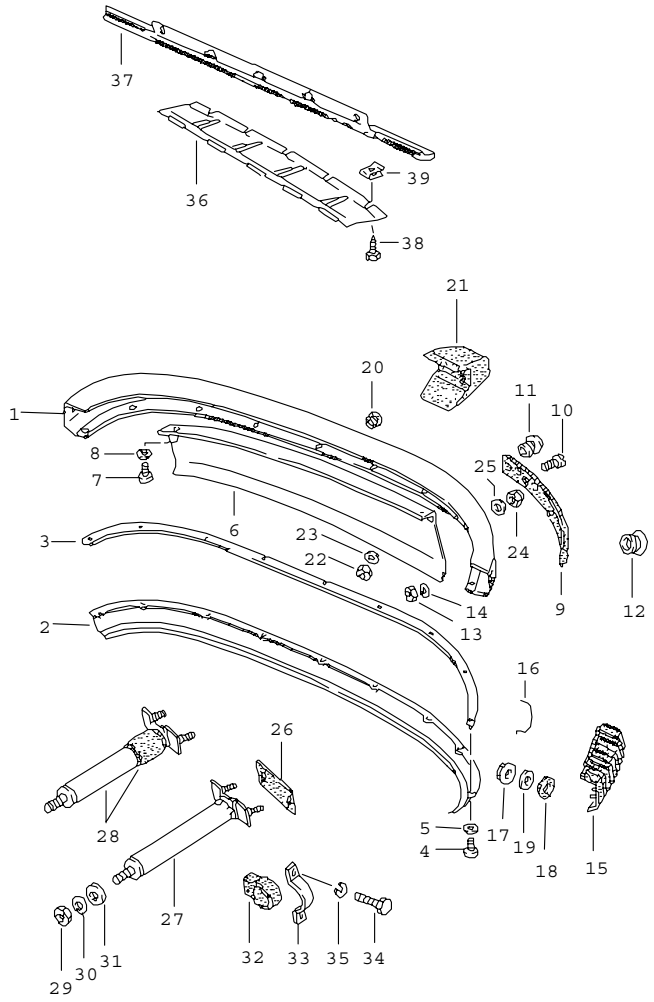

Pos	Part Number	Name	Remarks	Qty	Model
		bumper	/H		
(1)	930 505 012 01	bumper	-82	1	TURBO
1	930 505 112 01	bumper	83-	1	TURBO
1	930 505 112 01	bumper		1	SC
2	911 505 171 01	rear embellisher		1	SC
(2) A	930 505 077 00	rear embellisher		1	TURBO
(2)	930 505 077 04	rear embellisher		1	TURBO
(3) A	911 505 345 03	piping		1	
(3)	911 505 345 03	piping		1	
4	900 278 024 09	screw M 6 X 10		8	
5	N 011 524 7	washer A 6,4		8	
6	930 505 511 00	heat protection		1	TURBO
7	900 278 024 09	screw M 6 X 10		3	TURBO
8	N 011 524 7	washer A 6,4		6	TURBO
9	911 505 099 01	protective moulding	/L -82	1	SC
(9)	911 505 099 04	protective moulding	/L 83-	1	SC
(9)	911 505 100 01	protective moulding	/R	1	SC
(9)	930 505 089 00	protective moulding	/L	1	TURBO
(9)	930 505 090 00	protective moulding	/R	1	TURBO
	70A	black			
(9)	911 505 099 04	protective moulding	/L 83-	1	TURBO
(9)	911 505 100 01	protective moulding	/R 83-	1	TURBO
10	999 141 001 02	half-round screw M 5 X 12		2	
11	911 505 327 00	plug		1	
12	914 552 233 10	filler piece		2	
	01C	black			

Pos	Part Number	Name	Remarks	Qty	Model
13	900 910 011 02	lock nut M 6		3	TURBO
14	900 151 003 02	washer A 6,4		3	TURBO
(14)	999 704 135 70	washer 7 X 17 X 1,5 MONTANIT		3	TURBO
15	911 799 505 65	bellows	/L	1	
(15)	911 799 505 66	bellows	/R	1	
16	911 505 376 00	clamp		2	
17	900 910 009 02	lock nut NM 5		8	
18	901 511 791 21	rubber washer		8	
19	900 025 003 02	washer A 5,3		8	
20	911 505 347 00	rubber sleeve		2	
21	911 505 341 00	buffer	/L	1	SC(J)
(21)	911 505 341 02	buffer	/L	1	SC(USA) (CDN)
(21)	930 505 031 00	buffer	/L	1	TURBO(J)
(21)	930 505 031 01	buffer	/L	1	TURBO(USA) (CDN)
(21)	911 505 342 00	buffer	/R	1	SC(J)
(21)	911 505 342 02	buffer	/R	1	SC(USA) (CDN)
(21)	930 505 032 00	buffer	/R	1	TURBO(J)
(21)	930 505 032 01	buffer	/R	1	TURBO(USA) (CDN)
22	900 084 004 02	hexagon nut M 8		6	(USA)(CDN) (J)
23	900 025 007 02	washer 8,4		6	(USA)(CDN) (J)
24	N 011 185 6	hexagon nut M 10		4	
25	A 900 025 008 09	washer		4	
25	900 025 008 09	washer 10,5		4	
26	911 505 311 00	desk pad		2	
28	911 505 280 03	impact absorber		2	
29	999 084 608 02	hexagon nut M 12		2	
30	900 025 009 02	washer 13		2	
31	911 505 220 01	desk pad		2	
(31)	911 505 219 01	desk pad		2	M 058
32	911 505 221 00	stop		2	
33	911 505 223 00	supporting bow		2	
34	999 093 010 02	hexagon-head bolt M 8 X 20		4	
35	A N 012 009 3	lock ring		4	
35	900 027 015 02	lock ring A 8		4	
36	A 911 503 157 01	heat protection		1	SC
36	911 503 157 01	heat protection		1	SC
(36)	A 930 503 157 01	heat protection		1	TURBO
(36)	930 503 157 01	heat protection		1	TURBO
37	911 503 085 05	seal		1	
38	N 013 970 5	tapping screw B 4,8 X 9,5		5	
39	999 507 041 09	speed nut B 4,8		5	
		- -- E N D -- -			

Model	Year	MG	SG	Illustration	Restrictions	Update	11:25	18.08.2006	PORSCHE PET PORSCHE
911	83	8	03	803-00		203			

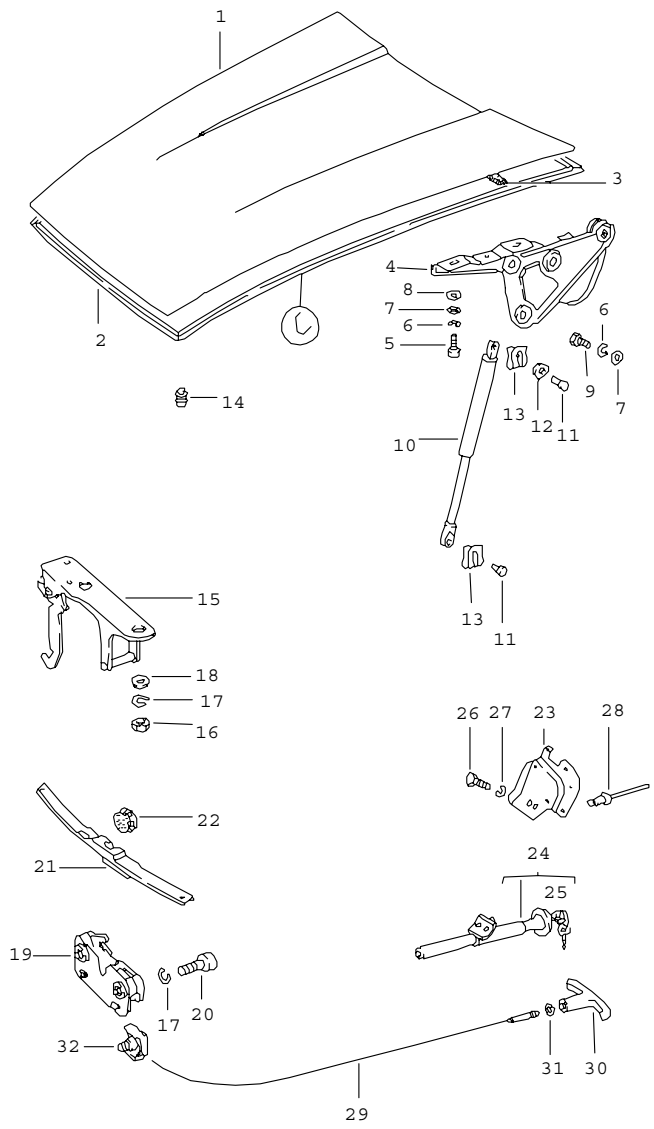

Pos	Part Number	Name	Remarks	Qty	Model
		cover	/V		
1	911 511 010 01	cover		1	
2	911 511 923 02	sealing frame		1	
3	911 511 127 00	sealing frame protective strip targa soft top		1	TARGA
4	A 901 511 031 20	hinge	/L	1	
4	911 511 031 00	hinge	/L	1	
(4)	A 901 511 032 20	hinge	/R	1	
(4)	911 511 032 00	hinge	/R	1	
5	A 900 067 057 02	pan-head screw		4	
5	900 067 057 02	pan-head screw M 8 X 20		4	
6	900 027 015 02	lock ring B 8		10	
7	900 025 007 02	washer 8,4		10	
8	900 151 008 02	washer 8,4		X	
9	900 075 085 02	hexagon-head bolt M 8 X 20		6	
10	A 911 511 331 01	gas-filled strut		2	
10	911 511 331 01	gas-filled strut		2	
11	999 166 043 02	bolt		4	
12	911 511 332 00	spacer		2	
13	A N 012 645 2	lock		4	
13	N 012 645 2	lock		4	
14	999 703 036 50	rubber stop		2	
15	911 511 051 02	lock upper part		1	
16	900 076 010 02	hexagon nut M 6		2	
17	N 012 007 2	lock ring A 6		4	

Pos	Part Number	Name	Remarks	Qty	Model
18	N 011 666 7	washer B 6,4		2	
19	911 511 052 01	lock lower part		1	
20	A N 014 743 2	pan-head screw		2	
20	N 014 743 2	pan-head screw M 6 X 30		2	
21	911 555 085 00	cover cross panel		1	
22	999 703 119 40	plug		2	
23	911 511 725 43	support lock		1	TARGA/ CABRIO
24	911 511 903 00	lock with 2 secondary keys w/o stipulated lock number		1	TARGA/ CABRIO
24	911 511 904 00	lock with 2 secondary keys with stipulated lock-no.		1	TARGA/ CABRIO
25	-	see group 8/04/00			
26	N 010 225 4	hexagon-head bolt M 5 X 8		2	TARGA/ CABRIO
27	900 027 011 01	lock ring A 5		2	TARGA/ CABRIO
28	999 190 123 02	blind rivet 3,2 X 7,37		4	TARGA/ CABRIO
29	901 511 073 20	lid-release cable		1	
30	901 552 813 20	handle		1	COUPE
31	901 511 791 21	rubber washer		1	COUPE
32	911 511 067 00	clamp		1	COUPE
		- -- E N D -- -			

Model	Year	MG	SG	Illustration	Restrictions	Update	11:25	18.08.2006	PORSCHE PET PORSCHE
911	83	8	03	803-05		203			

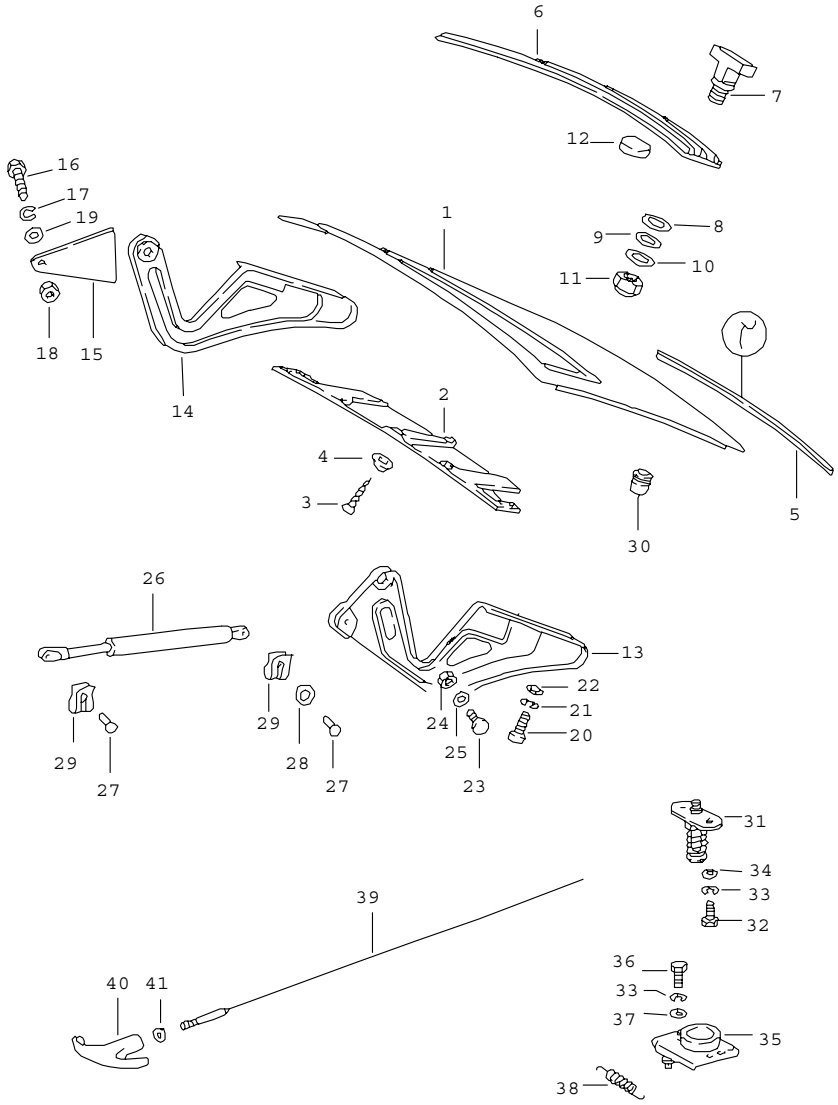

Pos	Part Number	Name	Remarks	Qty	Model
		cover	/H		
1	911 512 010 56	cover		1	SC
1	911 512 010 57	cover	81-	1	M 473
(1)	930 512 010 09	cover		1	TURBO
5	911 512 129 00	gasket		1	
6	A 911 559 411 00	ventilation grille		1	
6	911 559 411 00	ventilation grille		1	
7	911 559 433 00	t-headed screw		6	
(7)	911 559 433 01	t-headed screw		2	M 399/M 559
8	911 559 435 00	spacer		6	
9	113 951 539	washer		6	
10	N 011 665 3	washer B 5,3		6	
11	900 910 009 02	lock nut NM 5		6	
(11)	A 900 034 006 02	hexagon nut		2	M 399/M 559
(11)	900 034 006 02	hexagon nut BM 5		2	M 399/M 559
12	911 559 151 01	base		6	
13	911 512 035 00	hinge	/L	1	
14	901 512 036 20	hinge	/R	1	
(14)	930 512 036 00	lid hinge		1	TURBO
15	930 512 039 00	fastening plate		1	M 473
16	A 900 075 016 02	hexagon-head bolt		1	M 473
16	900 075 016 02	hexagon-head bolt M 6 X 22		1	M 473
17	N 012 226 5	spring washer B 6		1	M 473
18	900 076 010 02	hexagon nut M 6		1	M 473
19	N 011 524 7	washer 6,4		1	M 473

Pos	Part Number	Name	Remarks	Qty	Model
20	900 067 011 02	pan-head screw M 6 X 20		4	
21	N 012 006 4	lock ring B 6		4	
22	N 011 666 7	washer B 6,4		4	
23	901 512 471 20	bolt		2	
24	900 910 023 02	lock nut M 8		2	
25	A 900 025 007 02	washer		2	
25	900 025 007 02	washer 8,4		2	
26	A 911 512 331 01	gas-filled strut		1	SC
26	911 512 331 01	gas-filled strut		1	SC
(26)	A 911 512 331 02	gas-filled strut		2	M 473/M 559
(26)	911 512 331 02	gas-filled strut		2	M 473/M 559
27	999 166 043 02	bolt		2	
27	999 166 043 02	bolt		2	SC M 473
28	911 511 332 00	spacer		1	
29	A N 012 645 2	lock		2	
29	A N 012 645 2	lock		3	SC M 473
29	N 012 645 2	lock		3	
30	999 703 140 40	rubber buffer		2	
31	930 512 052 00	lock upper part		1	SC
(31)	930 512 052 00	lock upper part		1	TURBO
32	900 075 162 02	hexagon-head bolt M 6 X 16		2	SC
(32)	N 010 217 9	hexagon-head bolt M 6 X 20		2	TURBO
33	N 012 006 4	lock ring B 6		4	
34	N 011 666 7	washer B 6,4		2	
35	901 512 052 00	lock lower part		1	
36	900 075 162 02	hexagon-head bolt M 6 X 16		2	
37	A 900 025 028 02	washer		2	
37	N 011 666 7	washer B 6,4		2	
38	644 511 511 01	return spring		1	
39	901 511 073 20	lid-release cable		1	
40	901 552 813 20	handle		1	
41	911 512 531 00	grommet lid-release cable		1	

- -- E N D -- -

Model	Year	MG	SG	Illustration	Restrictions	Update				
911	83	8	03	803-10		203	11:25	18.08.2006	PORSCHE	PET	PORSCHE

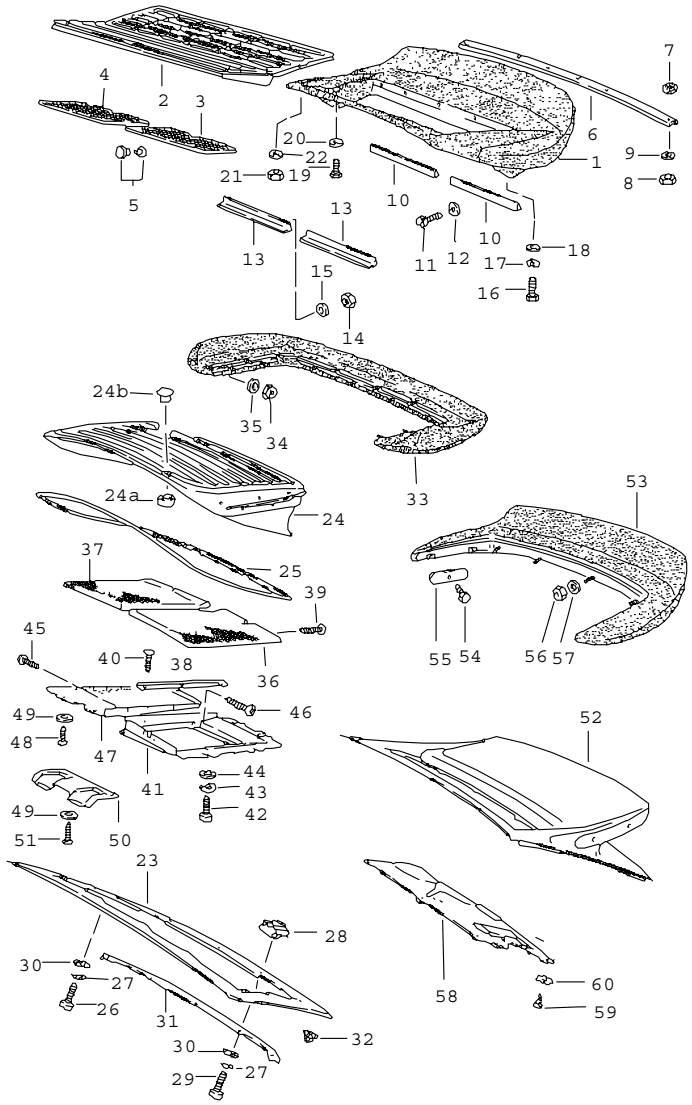

Pos	Part Number	Name	Remarks	Qty	Model
		rear spoiler			
1	911 512 019 02	polyurethane rear spoiler	-80	1	M 473
2	911 512 051 00	ventilation grille	-80	1	M 473
3	911 512 085 00	grille	/L -80	1	M 473
4	911 512 086 00	grille	/R -80	1	M 473
-	000 043 205 19	tesa-moll		1	
5	999 190 010 03	tubular rivet 3,7 X 9		4	
6	911 512 281 01	reinforcement plate	-80	1	M 473
7	901 503 399 01	sealing washer	-80	6	M 473
8	900 910 012 02	lock nut NM 6	-80	6	M 473
9	N 011 666 7	washer B 6,4		6	
10	911 512 283 00	reinforcement strip	-80	2	M 473
11	A N 044 734 1	pan-head screw	-80	6	M 473
11	N 044 734 1	pan-head screw M 5 X 16	-80	6	M 473
12	900 025 003 02	washer A 5,3	-80	6	M 473
13	911 512 284 00	reinforcement strip	-80	2	M 473
14	900 910 009 02	lock nut NM 5	-80	6	M 473
15	900 025 003 02	washer A 5,3	-80	6	M 473
16	900 075 145 02	hexagon-head bolt M 5 X 16	-80	5	M 473
17	N 012 005 3	lock ring B 5	-80	5	M 473
18	N 011 665 3	washer B 5,3	-80	5	M 473
19	A N 010 207 6	hexagon-head bolt	-80	2	M 473
19	N 010 207 6	hexagon-head bolt M 5 X 12	-80	2	M 473

Pos	Part Number	Name	Remarks	Qty	Model
20	N 011 665 3	washer B 5,3	-80	2	M 473
21	900 910 012 02	lock nut NM 6	-80	5	M 473
22	N 011 666 7	washer B 6,4	-80	5	M 473
23	930 512 010 09	cover		1	TURBO
(23)	911 512 010 56	cover	-80	1	SC
(23)	911 512 010 57	cover	81-	1	SC
24	930 512 023 00	rear spoiler	81-	1	TURBO M 473
24A	930 512 267 00	spacer	81-	2	TURBO M 473
24B	999 703 169 40	cap	81-	1	TURBO M 473
25	930 512 215 00	piping	81-	1	TURBO M 473
26	N 014 765 2	pan-head screw M 6 X 10	81-	3	TURBO M 473
27	N 012 226 5	spring washer A 6	81-	5	TURBO M 473
28	999 507 328 02	captive nut M 6	81-	5	TURBO M 473
29	900 119 091 02	pan-head screw M 6 X 15	81-	7	TURBO M 473
30	N 011 524 7	washer 6,4	81-	10	TURBO M 473
31	930 512 281 00	rail	81-	1	TURBO M 473
32	999 703 013 50	plug	81-	2	TURBO M 473
33	930 512 021 00	polyuret. rim for spoiler	81-	1	TURBO M 473
34	900 910 012 02	lock nut NM 6	81-	17	TURBO M 473
35	N 011 524 7	washer A 6,4	81-	17	TURBO M 473
36	930 512 031 00	grille	/L	1	TURBO
(36)	911 512 231 00	perforated plate	/L 81-	1	M 473
(36)	911 799 512 13	cover	81-	1	M 473
37	930 512 032 00	grille	/R	1	TURBO
(37)	911 512 232 00	perforated plate	/R 81-	1	M 473
38	930 512 175 00	angular plate	81-	2	TURBO M 473
39	900 143 124 07	tapping screw 3,5 X 13	81-	2	M 473
40	900 143 114 07	tapping screw 3,5 X 9,5	81-	6	TURBO M 473
41	930 512 241 00	air duct		1	TURBO
42	N 014 765 2	pan-head screw M 6 X 10		4	TURBO
43	N 012 226 5	spring washer A 6		4	TURBO
44	N 011 666 7	washer B 6,4		4	
45	900 143 124 07	tapping screw 3,5 X 13		2	TURBO
46	900 146 053 07	oval-head screw M 4 X 18		2	TURBO
47	930 512 044 00	reinforcement plate		1	TURBO
48	N 013 958 7	tapping screw		4	TURBO
48	N 013 958 7	tapping screw 3,5 X 13		4	TURBO
49	A 900 025 002 02	washer		5	TURBO
49	900 025 002 02	washer 4,3		5	TURBO
50	930 512 110 01	air duct spoiler	-79	1	(D) TURBO
51	N 013 958 7	tapping screw 3,5 X 13	-79	1	(D) TURBO
		special model -USA-			+80
52	911 512 010 07	spoiler lid		1	
53	911 512 019 00	rear spoiler		1	

Pos	Part Number	Name	Remarks	Qty	Model
54	900 187 115 02	screw 5,5 X 16		2	
55	901 504 755 20	tensioning spring		2	
56	900 910 009 02	lock nut NM 5		4	
57	N 011 665 3	washer 5,3		4	
58	911 512 165 01	cover plate		1	
59	900 143 001 02	tapping screw 2,9 X 6,5		2	
60	900 114 013 02	shake-proof washer 3,2		2	
		- -- E N D -- -			

Pos	Part Number	Name	Remarks	Qty	Model

Model	Year	MG	SG	Illustration	Restrictions	Update	11:25	18.08.2006	PORSCHE PET PORSCHE
911	83	8	04	804-00		203			

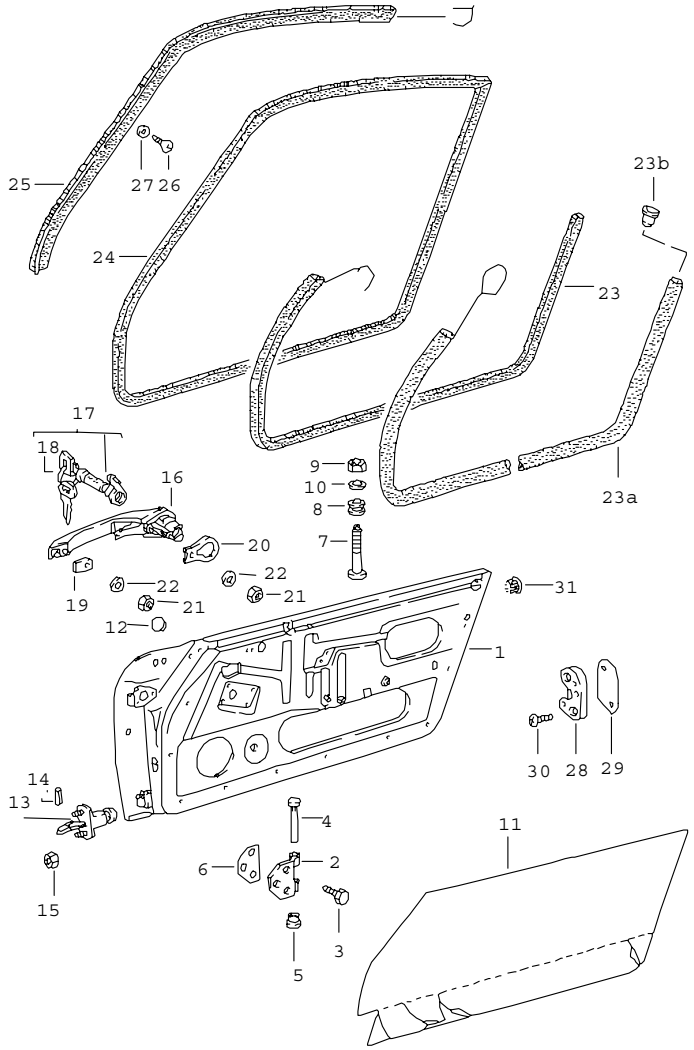

Pos	Part Number	Name	Remarks	Qty	Model
		doors			
(1)	A 911 531 005 09	bare door shell	/L	1	
1	A 911 531 006 09	bare door shell	/R	1	
(1)	911 531 005 21	bare door shell	/L	1	
1	911 531 006 21	bare door shell order also:	/R	1	
-	900 145 026 07	tapping screw B 4,2 X 22		8	
-	999 591 717 40	expander nut B 4,2		10	
-	911 531 955 00	bracket	/L	1	
-	911 531 956 00	bracket	/R	1	
-	N 011 524 7	washer A 6,4		4	
-	999 072 005 09	hexagon-head bolt M 6 X 12		4	
2	901 531 303 21	hinge arm		4	
3	999 093 010 02	hexagon-head bolt M 8 X 20		12	
4	901 531 305 20	pin for door hinge		4	
5	901 531 311 20	bush		8	
6	901 531 391 20	desk pad		4	
7	911 542 045 00	adjusting screw	-80	2	TARGA
8	211 959 221	grommet	-80	2	TARGA
9	900 076 010 02	hexagon nut M 6	-80	2	TARGA
10	N 011 524 7	washer 6,4	-80	2	TARGA
(11)	911 531 889 00	seal	/L	1	
11	911 531 890 00	seal	/R	1	
12	999 703 119 40	plug		10	
13	A 911 531 057 01	door support		2	
13	911 531 057 02	door arrester		2	

Pos	Part Number	Name	Remarks	Qty	Model
14	900 309 032 02	spiral clamping pin		2	
15	A 900 084 010 02	hexagon nut		4	
15	900 910 012 02	lock nut M 6 self-locking		4	
16	A 911 531 941 00	outer door handle chrome without lock cylinder		2	SC
(16)	911 538 941 05	outer door handle chrome with lock cylinder w/o stipulated lock number	/L	1	
(16)	911 538 941 04	outer door handle chrome with lock cylinder state lock number	/L	1	
(16)	911 538 942 05	outer door handle chrome with lock cylinder w/o stipulated lock number	/R	1	
(16)	911 538 942 04	outer door handle chrome with lock cylinder state lock number	/R	1	
(16)	A 911 531 941 28	outer door handle black without lock cylinder		2	TURBO
(16)	911 538 941 07	outer door handle black with lock cylinder w/o stipulated lock number	/L	1	
(16)	911 538 941 06	outer door handle black with lock cylinder state lock number	/L	1	
(16)	911 538 942 07	outer door handle black with lock cylinder w/o stipulated lock number	/R	1	
(16)	911 538 942 06	outer door handle black with lock cylinder state lock number	/R	1	
(17)	911 531 943 00	lock cylinder with 2 secondary keys w/o stipulated lock number	/L	1	
(17)	911 531 947 00	lock cylinder MIT 1 NEBENSCHLUESSEL state lock number	/L	1	
17	911 531 944 00	lock cylinder with 2 secondary keys w/o stipulated lock number	/R	1	
17	911 531 948 00	lock cylinder MIT 1 NEBENSCHLUESSEL state lock number	/R	1	
(18)	911 538 903 00	blank key		1	
(18)	944 538 041 00	key lamp		1	
18	A 911 531 946 00	main key with light without battery state lock number		2	
(18)	911 538 902 00	replacement key with key cap state lock number information available		2	
(18)	914 531 903 11	blank key with stipulated lock-no.		2	
(18)	914 531 903 11	blank key secondary key single parts key lamp		1	
-	911 531 638 00	cap		1	
-	928 537 627 02	pressure spring		1	
-	911 531 640 00	bulb with plate		1 1	
-	911 531 641 00	bridge		1	
-	911 531 642 00	cover		1	
19	911 531 631 00	desk pad		2	
20	911 531 632 00	desk pad		2	

Pos	Part Number	Name	Remarks	Qty	Model	Pos	Part Number	Name	Remarks	Qty	Model
21	999 084 102 02	lock nut		4							
22	900 025 003 02	washer 5,3		4							
23	A 911 531 093 45	door seal		2	TARGA						
(23)	911 531 095 40	door sealing		2	TARGA/CABRIO						
23A	A 911 531 293 60	door seal		2	CABRIO						
23B	A 911 531 523 65	cap		2	CABRIO						
23B	911 531 523 65	cap		2	CABRIO						
24	911 531 095 02	door sealing		2	COUPE						
(25)	911 542 403 01	sealing rail	/L	1	COUPE						
25	911 542 404 01	sealing rail	/R	1	COUPE						
26	900 145 081 00	tapping screw B 2,9 X 6,5		30							
27	999 591 009 12	washer 3,5 MS		30							
(28)	993 531 029 00	door lock striker	/L	1							
28	993 531 030 00	door lock striker	/R	1							
29	901 531 703 23	shim 1 MM		X							
(29)	901 531 703 24	shim 2 MM		X							
30	999 219 008 00	countersunk-head screw M 8 X 40		4							
31	911 531 243 00	plug without alarm system	/L	1							
		- -- E N D -- -									

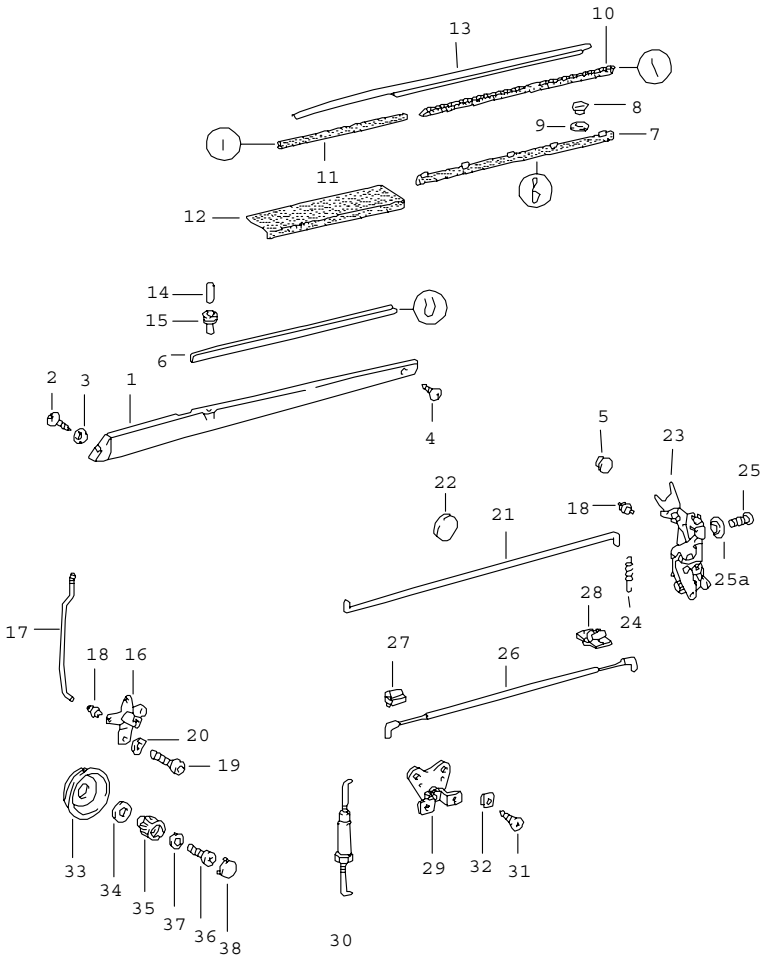

Pos	Part Number	Name	Remarks	Qty	Model
		installation parts doors			
1	-	see group 8/07/10			
2	900 145 071 07	tapping screw B 3,5 X 13		2	
3	999 591 116 07	cone washer		2	
4	N 013 958 7	tapping screw B 3,5 X 13		2	
5	914 552 233 10	filler piece		2	
	01C	black			
6	911 531 951 01	sealing for door slot		2	
(7)	901 531 935 20	sealing for door slot	/L	1	
7	901 531 936 20	sealing for door slot	/R	1	
8	999 591 326 02	moulding clip		14	
9	911 531 309 00	ring		14	
(10)	911 531 931 02	sealing	/L	1	COUPE
(10)	911 531 931 42	sealing	/L	1	TARGA/ CABRIO
10	911 531 932 02	sealing	/R	1	COUPE
(10)	911 531 932 42	sealing	/R	1	TARGA/ CABRIO
11	901 531 933 20	sealing		2	
12	999 915 706 00	adhesive tape 19 X 300		2	
(13)	901 531 431 27	moulding chrome	/L	1	SC COUPE
(13)	901 531 431 30	moulding black	/L -79	1	COUPE
(13)	911 531 431 00	moulding	/L 80-	1	COUPE
	70K	black			
13	901 531 432 27	moulding chrome	/R	1	SC COUPE
13	901 531 432 30	moulding black	/R -79	1	COUPE

Pos	Part Number	Name	Remarks	Qty	Model
	70K	moulding black	/R 80-	1	COUPE
(13)	911 531 042 30	moulding	/R 80-	1	COUPE
	70K	black			
(13)	901 531 431 41	moulding chrome	/L	1	TARGA
(13)	901 531 431 50	moulding black	/L -79	1	TARGA
(13)	911 531 431 40	moulding	/L 80-	1	TARGA/
	70K	black			CABRIO
(13)	901 531 432 41	moulding chrome	/R	1	TARGA
(13)	901 531 432 50	moulding black	/R -79	1	TARGA
(13)	911 531 432 40	moulding	/R 80-	1	TARGA/
	70K	black			CABRIO
14	928 555 359 02	knob		2	
15	928 555 565 02	guide sleeve		2	
(16)	911 531 075 01	mounting for push-button	/L	1	
16	911 531 076 01	mounting for push-button	/R	1	
(17)	911 531 707 00	rod for push-button	/L	1	
17	911 531 708 00	rod for push-button	/R	1	
18	993 531 563 00	linkage clip		10	
19	900 186 147 02	pan-head screw M 6 X 10		4	
20	N 012 226 5	spring washer B 6		4	
21	911 531 562 00	connecting rod		2	
22	911 531 599 00	rubber mounting		4	
(23)	964 531 053 01	door lock with antishutout-mechanism	/L	1	
23	964 531 054 00	door lock without antishutout mechan	/LL/R	1	
24	993 531 165 00	tension spring		2	
25	999 219 009 00	countersunk-head screw micro-self-locking M 6 X 16		6	
25A	999 591 118 02	cone washer 6,5		6	
(26)	911 531 509 00	bowden cable	/L	1	
26	911 531 510 00	bowden cable	/R	1	
27	911 531 097 00	support	/V	2	
28	911 531 099 00	support	/H	2	
29	911 531 083 00	relay lever		2	
30	911 531 091 00	pull rod		2	
31	N 014 086 4	tapping screw B 3,5 X 13		4	
32	999 507 009 02	speed nut 3,5 $		4	
33	911 531 692 00	covering		2	
34	911 531 705 00	spacer ring	-78	2	
34	911 531 705 00	spacer ring		2	TURBO
35	911 531 696 00	rotary knob		2	
36	N 014 133 8	oval-head screw AM 5 X 12		2	
37	A 900 115 002 01	serrated lock washer		2	
37	N 012 130 2	shake-proof washer J 5,3		2	
38	911 531 703 00	cap		2	
		- -- E N D -- -			

Model	Year	MG	SG	Illustration	Restrictions	Update	11:26	18.08.2006	PORSCHE PET PORSCHE
911	83	8	04	804-10		203			

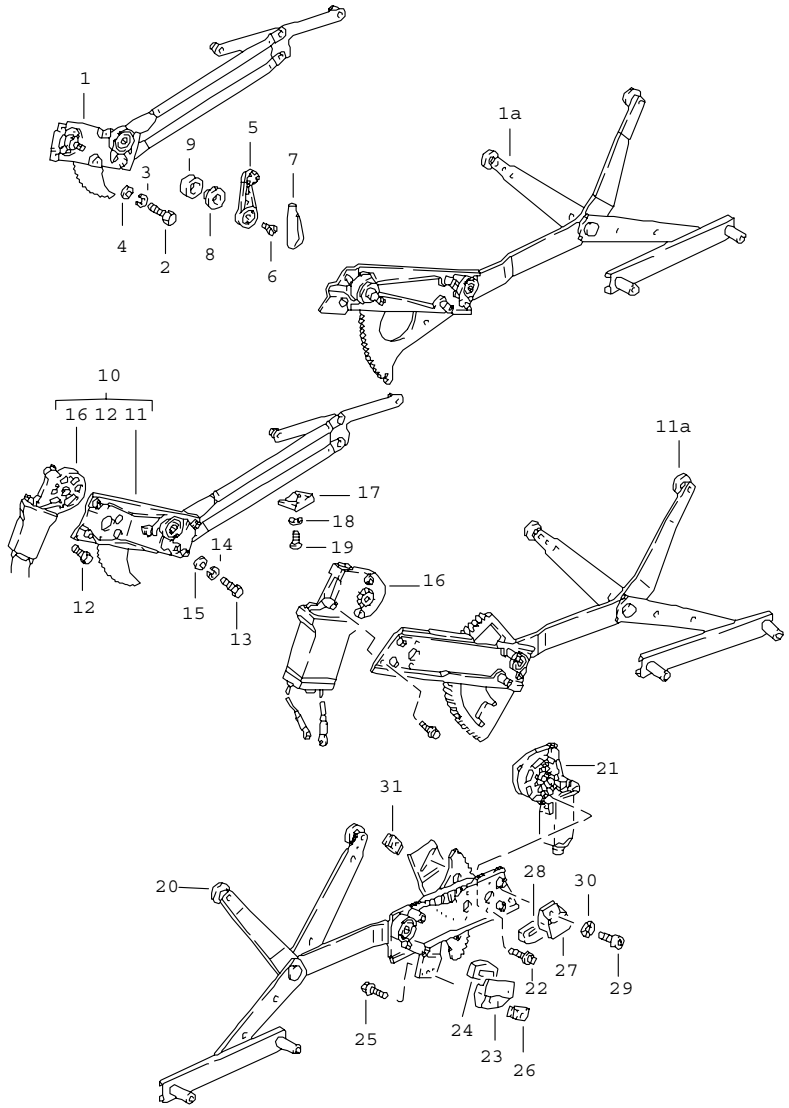

Pos	Part Number	Name	Remarks	Qty	Model
		power windows			
		mechanical	-79		
		see tpi group 8 NR.5/80			
		see group 8/05/00 use also: POS.11	80-		
(1A)	911 542 929 03	cross-arm	/L	1	COUPE
(1A)	911 542 929 42	cross-arm	/L	1	TARGA
1A	911 542 930 03	cross-arm	/R	1	COUPE
(1A)	911 542 930 42	cross-arm	/R	1	TARGA
2	N 010 210 13	hexagon-head bolt M 6 X 10		8	
3	N 012 006 4	lock ring B 6		8	
4	N 011 524 7	washer 6,4		8	
5	911 542 471 01	window crank		2	
6	911 542 475 00	conical screw		2	
7	901 542 482 20	cover		2	
8	901 552 891 20	rose		2	
9	901 542 495 20	sealing ring		2	
		electric	80-		
(11A) A	911 542 935 28	cross-arm	/L 80-	1	COUPE
(11A)	911 542 935 28	cross-arm without engine and transmission	/L 80-	1	COUPE
11A A	911 542 936 28	cross-arm	/R 80-	1	COUPE
11A	911 542 936 28	cross-arm without engine and transmission	/R 80-	1	COUPE
12	999 093 004 02	hexagon-head bolt M 6 X 16		6	

Pos	Part Number	Name	Remarks	Qty	Model
13	999 217 022 02	hexagon-head bolt M 6 X 16		8	
14	N 012 006 4	lock ring B 6		8	
15	N 011 524 7	washer 6,4		8	
(16)	911 624 015 01	motor	/L	1	COUPE
(16)	911 624 014 01	motor	/R	1	COUPE
17	901 542 063 00	stop		2	
18	A N 012 222 4	spring washer		4	
18	N 012 222 4	spring washer A 5		4	
19	900 119 011 02	pan-head screw M 5 X 10		4	
20	A 911 542 933 42	cross-arm	/L	1	TARGA/
20	911 542 935 44	cross-arm without engine and transmission order also:	/L -82	1	TARGA/ CABRIO TARGA
-	911 542 057 42	window lifter rail	/L -82	1	
(20)	A 911 542 934 42	cross-arm	/R	1	TARGA/
(20)	911 542 936 44	cross-arm without engine and transmission order also:	/R -82	1	TARGA/ CABRIO TARGA
-	911 542 058 42	window lifter rail	/R -82	1	
21	911 624 015 41	motor	/L	1	TARGA/ CABRIO
(21)	911 624 014 41	motor	/R	1	TARGA/ CABRIO
22	999 217 028 02	hexagon-head bolt M 6 X 16		6	
23	911 542 937 42	stop lower	/L	1	
(23)	911 542 938 42	stop lower	/R	1	
24	911 542 235 40	stop		2	
25	999 217 004 02	screw M 6 X 12		2	
26	N 011 052 4	square nut M 6		2	
27	911 542 943 42	stop upper	/L	1	
(27)	911 542 944 42	stop upper	/R	1	
28	911 542 939 42	insert		2	
29	900 067 008 02	pan-head screw M 6 X 12		2	
30	999 523 104 02	lock washer M 6		2	
31	999 084 424 02	lock nut M 6		2	

- -- E N D -- -

Model	Year	MG	SG	Illustration	Restrictions	Update	11:26	18.08.2006	PORSCHE PET PORSCHE
911	83	8	04	804-15		203			

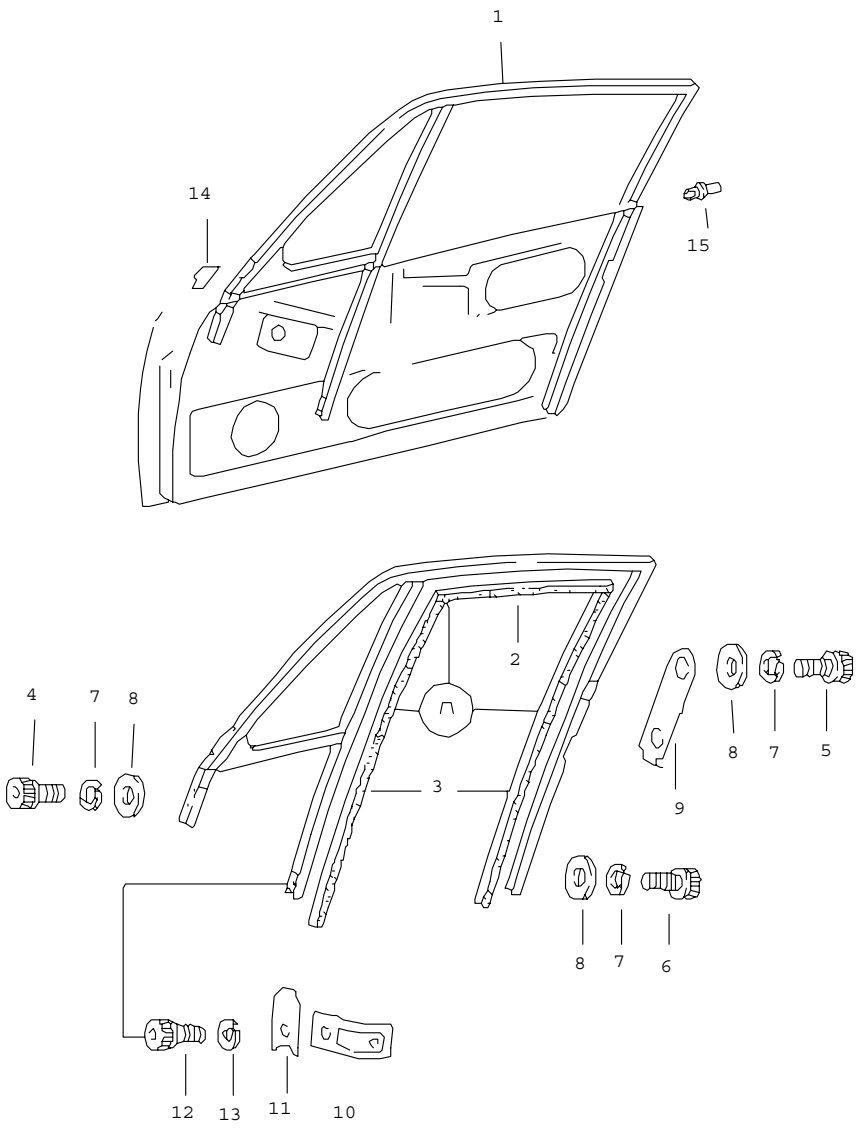

Pos	Part Number	Name	Remarks	Qty	Model
		door glass frame			+COUPE
(1)	901 542 021 27	door glass frame chrome	/L -79	1	SC
(1)	901 542 021 28	door glass frame black	/L -79	1	
1	911 542 029 01	door glass frame	/L 80-	1	
	70K	black			
1	901 542 022 27	door glass frame chrome	/R -79	1	SC
1	901 542 022 28	door glass frame black	/R -79	1	
1	911 542 030 01	door glass frame	/R 80-	1	
	70K	black			
2+3	911 542 905 00	window guide		2	
4	900 119 052 02	pan-head screw M 8 X 16		4	
5	999 218 008 02	pan-head screw M 8 X 12		2	
6	900 119 052 02	pan-head screw M 8 X 16		2	
7	900 027 015 02	lock ring B 8		8	
8	900 025 007 02	washer 8,4		8	
9	901 542 299 25	cover plate		2	
10	911 542 061 00	retaining bracket		2	
11	901 542 252 25	desk pad		2	
12	900 119 052 02	pan-head screw M 8 X 16		2	
13	900 027 015 02	lock ring B 8		2	
(14)	911 531 711 01	joint rubber	/V/L	1	
14	911 531 712 01	joint rubber	/V/R	1	
(14)	911 531 713 01	joint rubber	/H/L	1	
(14)	911 531 714 01	joint rubber	/H/R	1	

Pos	Part Number	Name	Remarks	Qty	Model	Pos	Part Number	Name	Remarks	Qty	Model
15	999 591 429 40	expansion rivet		2							
		- -- E N D -- -									

Model	Year	MG	SG	Illustration	Restrictions	Update	11:26	18.08.2006	PORSCHE PET PORSCHE
911	83	8	04	804-20		203			

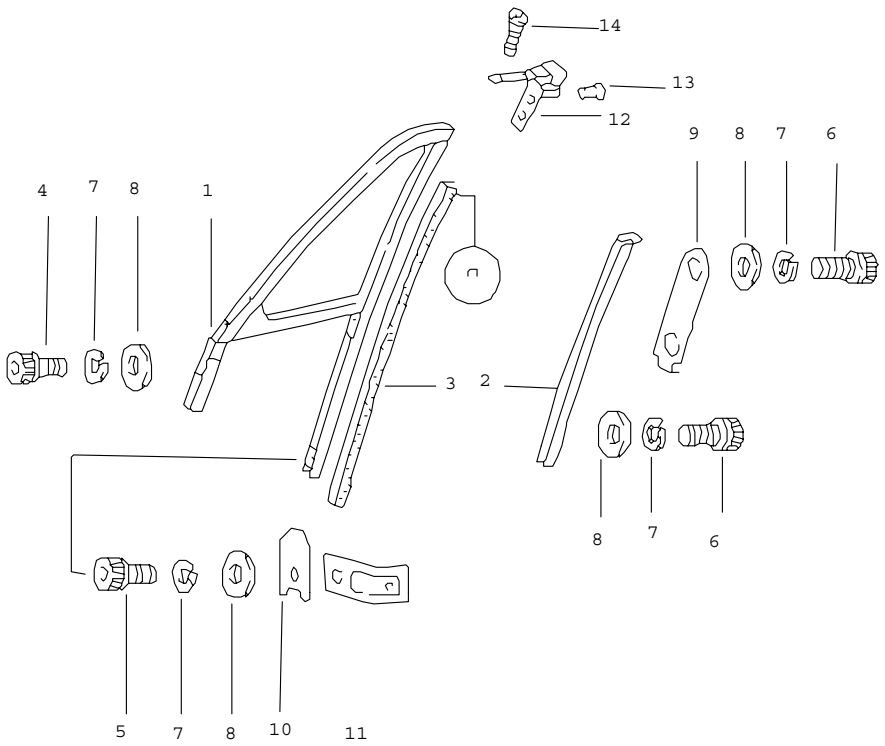

Pos	Part Number	Name	Remarks	Qty	Model
		door glass frame	O		+TARGA/CABRI
(1)	911 542 019 40	door glass frame chrome	/L -79	1	
(1)	911 542 019 41	door glass frame black	/L -79	1	
(1)	911 542 019 43	door glass frame	/L 80-	1	
	70K	black			
1	911 542 020 40	door glass frame chrome	/R -79	1	
1	911 542 020 41	door glass frame black	/R -79	1	
1	911 542 020 43	door glass frame	/R 80-	1	
	70K	black			
(2)	901 542 023 40	guide chrome	/L -79	1	
(2)	901 542 023 48	guide black	/L -79	1	
(2)	901 542 023 40	guide black	/L 80-	1	
2	901 542 024 40	guide chrome	/R -79	1	
(2)	901 542 024 48	guide black	/R -79	1	
(2)	911 542 036 40	guide black	/R 80-	1	
3	911 542 505 40	window guide		2	
4	900 119 091 02	pan-head screw M 6 X 15		4	
5	900 119 091 02	pan-head screw M 6 X 15		6	
6	900 119 035 02	pan-head screw M 6 X 8		6	
7	N 012 006 4	lock ring B 6		14	
8	N 011 524 7	washer 6,4		14	
9	901 542 299 20	cover plate		2	

Pos	Part Number	Name	Remarks	Qty	Model	Pos	Part Number	Name	Remarks	Qty	Model
10	901 542 252 20	desk pad		2							
11	911 542 061 00	retaining bracket		2							
(12)	A 911 542 065 41	frame connection	/L	1							
(12)	911 542 065 41	frame connection	/L	1							
12	A 911 542 066 41	frame connection	/R	1							
12	911 542 066 41	frame connection	/R	1							
13	900 056 003 20	rivet		4							
14	900 270 051 00	rais. counters. h. tap. s. AM 4 X 8 ROSTFREI	-79	4							
14	900 270 050 07	countersunk-head screw M 5 X 8	80-	4							
		- -- E N D -- -									

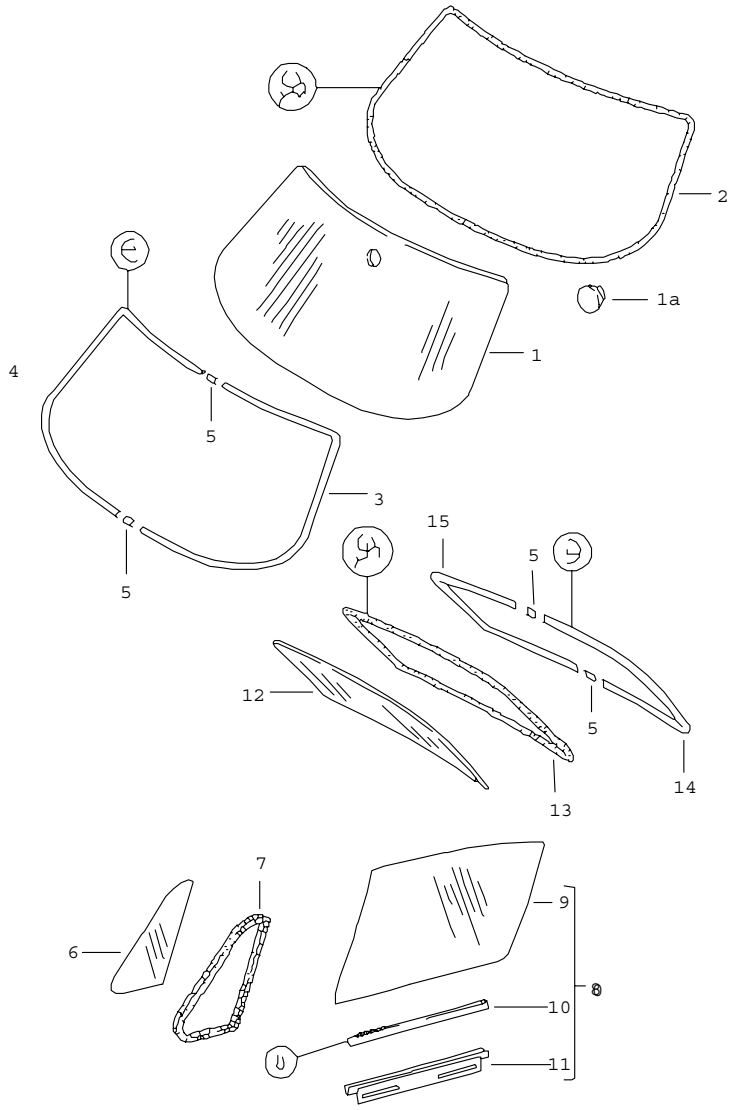

Pos	Part Number	Name	Remarks	Qty	Model
		windows			
1	911 541 011 00	windscreen clear not for (USA)(CDN)		1	
(1)	911 541 011 04	windscreen tinted		1	
(1) A	911 541 011 02	windscreen	80-81	1	
(1)	911 541 011 05	windscreen tinted upper part: dark green	80-	1	
(1)	930 541 011 02	windscreen tinted upper part: dark green heated		1	
1A	477 845 043	adhesive plate		1	
2	911 541 225 00	windscreen sealing		1	
3	901 541 911 20	trim frame-half chrome	/L -79	1	
(3)	911 541 911 01	trim frame	/L	1	
	70K	black			
4	901 541 912 20	trim frame-half chrome	/R -79	1	
(4)	911 541 912 01	trim frame-half	/R	1	
	70K	black			
5	644 541 921 06	covering plate chrome	-79	4	
(5)	911 541 921 01	covering plate		4	
	70K	black			
6	901 542 501 27	side window clear not for (USA)(CDN)	/L	1	SC
(6)	911 542 511 00	side window tinted	/L	1	
(6)	901 542 502 27	side window not for (USA)(CDN)	/R	1	SC

Pos	Part Number	Name	Remarks	Qty	Model
(6)	911 542 512 00	side window tinted	/R	1	
7	901 542 921 21	sealing frame	/L	1	
(7)	901 542 922 21	sealing frame	/R	1	
8	901 542 011 27	door glass clear parallel arm window lift not for (USA)(CDN)	/L -79	1	SC
(8)	911 542 011 01	door glass clear cross arm window lift not for (USA)(CDN)	/L 80-	1	SC
(8)	901 542 011 37	door glass tinted parallel arm window lift	/L -79	1	
(8)	911 542 011 02	door glass tinted cross arm window lift	/L 80-	1	
(8)	901 542 012 27	door glass clear parallel arm window lift not for (USA)(CDN)	/R -79	1	SC
(8)	911 542 012 01	door glass clear cross arm window lift not for (USA)(CDN)	/R 80-	1	SC
(8)	901 542 012 37	door glass tinted parallel arm window lift	/R -79	1	
(8)	911 542 012 02	door glass tinted cross arm window lift power windows	/R 80-	1	
9	901 542 101 25	door glass clear not for (USA)(CDN)	/L	1	SC
(9)	901 542 101 35	door glass tinted	/L	1	
(9)	901 542 102 25	door glass clear not for (USA)(CDN)	/R	1	SC
(9)	901 542 102 35	door glass tinted	/R	1	
10	A 911 542 491 40	rubber ply		2	
10	911 542 491 40	rubber ply		2	
11	901 542 045 23	window lifter rail parallel arm window lift	/L -79	1	
(11)	911 542 057 00	window lifter rail cross arm window lift	/L 80-	1	
(11)	901 542 046 23	window lifter rail parallel arm window lift	/R -79	1	
(11)	911 542 058 00	window lifter rail cross arm window lift	/R 80-	1	
12	911 545 105 00	rear window clear single-stage heating		1	SC
(12)	911 545 107 00	rear window tinted two-stage heatable		1	
13	A 901 545 901 21	sealing frame		1	
13	911 545 225 00	sealing frame		1	
14	901 545 911 20	trim frame-half chrome	/L -79	1	SC
(14)	911 545 911 00	trim frame	/L	1	
	70K	black			
15	901 545 912 20	trim frame-half chrome	/R -79	1	SC
(15)	911 545 912 00	trim frame-half	/R	1	
	70K	black			

- -- E N D -- -

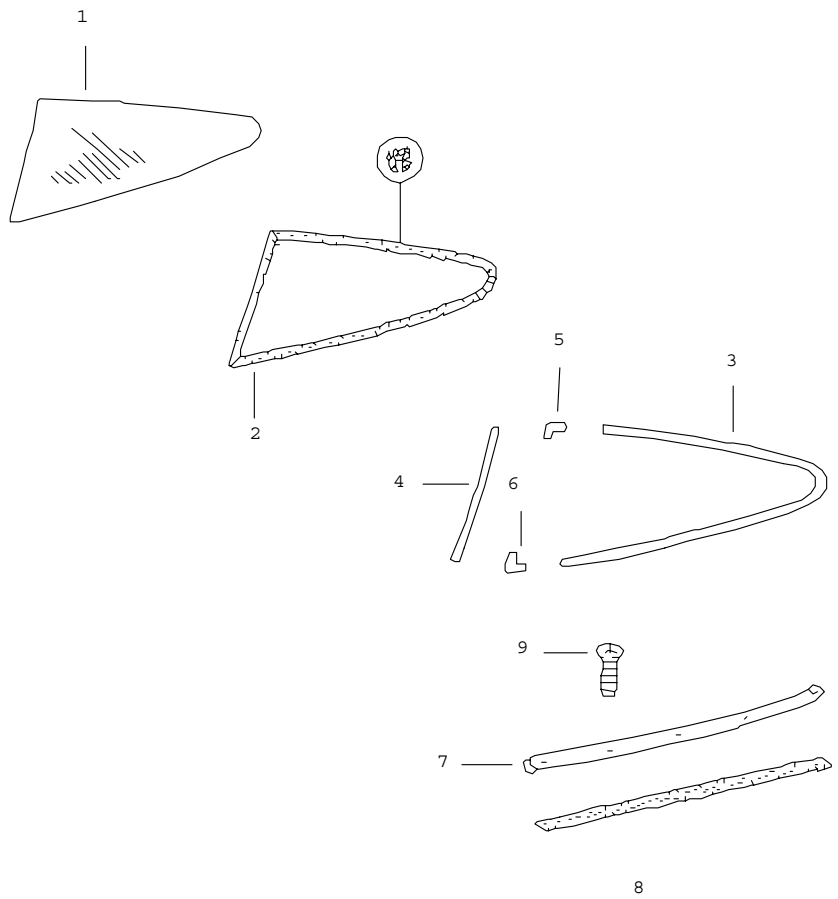

Pos	Part Number	Name	Remarks	Qty	Model
		windows			+COUPE
1	911 543 101 01	rear glass clear not for (USA)(CDN)	/L	1	SC
(1)	911 543 101 02	rear glass tinted	/L	1	
(1)	911 543 102 01	rear glass clear not for (USA)(CDN)	/R	1	SC
(1)	911 543 102 02	rear glass tinted	/R	1	
2	911 543 035 01	sealing frame	/L	1	
2	911 543 036 01	sealing frame	/R	1	
3	911 543 419 00	moulding chrome	/L -79	1	SC
(3)	911 543 419 28	moulding black	/L -79	1	
(3)	911 543 419 01	moulding black	/L 80-	1	
(3)	911 543 420 00	moulding chrome	/R -79	1	SC
(3)	911 543 420 28	moulding black	/R -79	1	
(3)	911 543 420 01	moulding black	/R 80-	1	
4	911 543 197 00	moulding chrome	/L -79	1	SC
(4)	911 543 197 01	moulding black	/L -79	1	
(4)	911 543 197 01	moulding black	/L 80-	1	
(4)	911 543 198 00	moulding chrome	/R -79	1	SC
(4)	911 543 198 01	moulding black	/R -79	1	
(4)	911 543 198 01	moulding black	/R 80-	1	

Pos	Part Number	Name	Remarks	Qty	Model
5	911 543 187 00	covering plate chrome	-79	2	SC
(5)	911 543 187 01	covering plate black	-79	2	
(5)	911 543 187 01	covering plate black	80-	2	
6	911 543 185 00	covering plate chrome	-79	2	SC
(6)	911 543 185 28	covering plate black	-79	2	
(6)	911 543 185 01	covering plate black	80-	2	
7	911 543 195 00	moulding chrome	/L -79	1	SC
(7)	911 543 195 02	moulding black	/L -79	1	
(7)	911 543 195 02	moulding	/L 80-	1	
	70K	black			
(7)	911 543 196 00	moulding chrome	/R -79	1	SC
(7)	911 543 196 28	moulding black	/R -79	1	
(7)	911 543 196 02	moulding	/R 80-	1	
	70K	black			
8	000 043 129 00	sealing strap		X	
9	900 144 009 00	counters. head tapp. screw B 2,9 X 13 VERZ.	-79	12	SC
(9)	900 144 017 07	tapping screw B 2,9 X 13 black		12	
		- -- E N D -- -			

Model	Year	MG	SG	Illustration	Restrictions	Update			
911	83	8	05	805-10		203	11:27	18.08.2006	PORSCHE PET PORSCHE

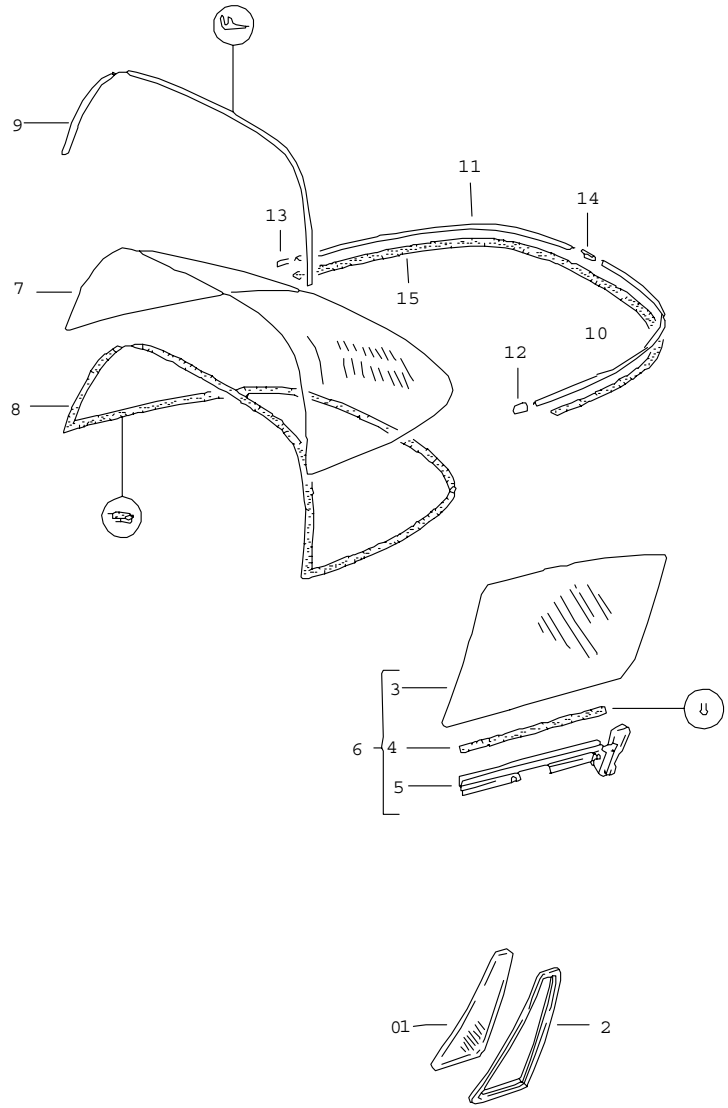

Pos	Part Number	Name	Remarks	Qty	Model
		windows	O		+TARGA/CABRI
		windscreen see group 8/05/00			
1	911 542 503 40	door glass clear not for (USA)(CDN)	/L	1	
(1)	911 542 503 41	side window tinted	/L	1	
(1)	911 542 504 40	door glass clear not for (USA)(CDN)	/R	1	
(1)	911 542 504 41	side window tinted	/R	1	
2	911 799 542 85	sealing frame		2	
3	901 542 101 40	door glass	/L -82	1	
3	911 542 101 40	door glass clear not for (USA)(CDN)	/L 83-	1	
(3)	901 542 101 45	door glass	/L -82	1	
(3)	911 542 101 45	door glass tinted	/L 83-	1	
(3)	901 542 102 40	door glass	/R -82	1	
(3)	911 542 102 40	door glass clear not for (USA)(CDN)	/R 83-	1	
(3)	901 542 102 45	door glass	/R -82	1	
(3)	911 542 102 45	door glass tinted	/R 83-	1	
4 A	911 542 491 40	rubber ply	-79	2	
4	911 542 491 40	rubber ply		2	
5	901 542 043 43	window lifter rail parallel arm window lift	/L -79	1	
5	911 542 057 42	window lifter rail cross arm window lift	/L 80-	1	

Pos	Part Number	Name	Remarks	Qty	Model
(5)	901 542 044 43	window lifter rail parallel arm window lift	/R -79	1	
(5)	911 542 058 40	window lifter rail cross arm window lift	/R 80-82	1	
(5)	911 542 058 42	window lifter rail cross arm window lift	/R 83-	1	
6	901 542 011 43	door glass clear parallel arm window lift not for (USA)(CDN)	/L -79	1	
(6)	911 542 011 40	door glass	/L 80-82	1	
(6)	911 542 011 42	door glass clear cross arm window lift not for (USA)(CDN)	/L 83-	1	
(6)	901 542 011 47	door glass tinted parallel arm window lift	/L -79	1	
(6)	911 542 011 41	door glass	/L 80-82	1	
(6)	911 542 011 44	door glass tinted cross arm window lift	/L 83-	1	
(6)	901 542 012 43	door glass clear parallel arm window lift not for (USA)(CDN)	/R -79	1	
(6)	911 542 012 40	door glass	/R 80-82	1	
(6)	911 542 012 42	door glass clear cross arm window lift not for (USA)(CDN)	/R 83-	1	
(6)	901 542 012 47	door glass tinted parallel arm window lift	/R -79	1	
(6)	911 542 012 41	door glass	/R 80-82	1	
(6)	911 542 012 44	door glass tinted cross arm window lift	/R 83-	1	

Pos	Part Number	Name	Remarks	Qty	Model
7	911 565 551 03	rear window tinted two-stage heatable		1	TARGA
8	911 545 051 41	sealing frame		1	TARGA
9	901 565 930 41	gasket		1	TARGA
10	901 565 555 40	moulding chrome	/L -79	1	TARGA
(10)	911 565 555 41	moulding	/L	1	TARGA
	70K	black			
11	901 565 556 40	moulding chrome	/R -79	1	TARGA
(11)	911 565 556 41	moulding	/R	1	TARGA
	70K	black			
12	901 565 561 40	moulding end chrome	/L -79	1	TARGA
(12)	911 565 569 40	moulding	/L	1	TARGA
	70K	black			
13	901 565 562 40	moulding end chrome	/R -79	1	TARGA
(13)	911 565 570 40	moulding	/R	1	TARGA
	70K	black			
14	644 541 921 06	covering plate chrome	-79	1	TARGA
14	911 541 921 01	covering plate		1	
	70K	black			
15	000 043 129 00	sealing strap		X	
		- -- E N D -- -			

Model	Year	MG	SG	Illustration	Restrictions	Update	11:27	18.08.2006	PORSCHE PET PORSCHE
911	83	8	07	807-00		203			

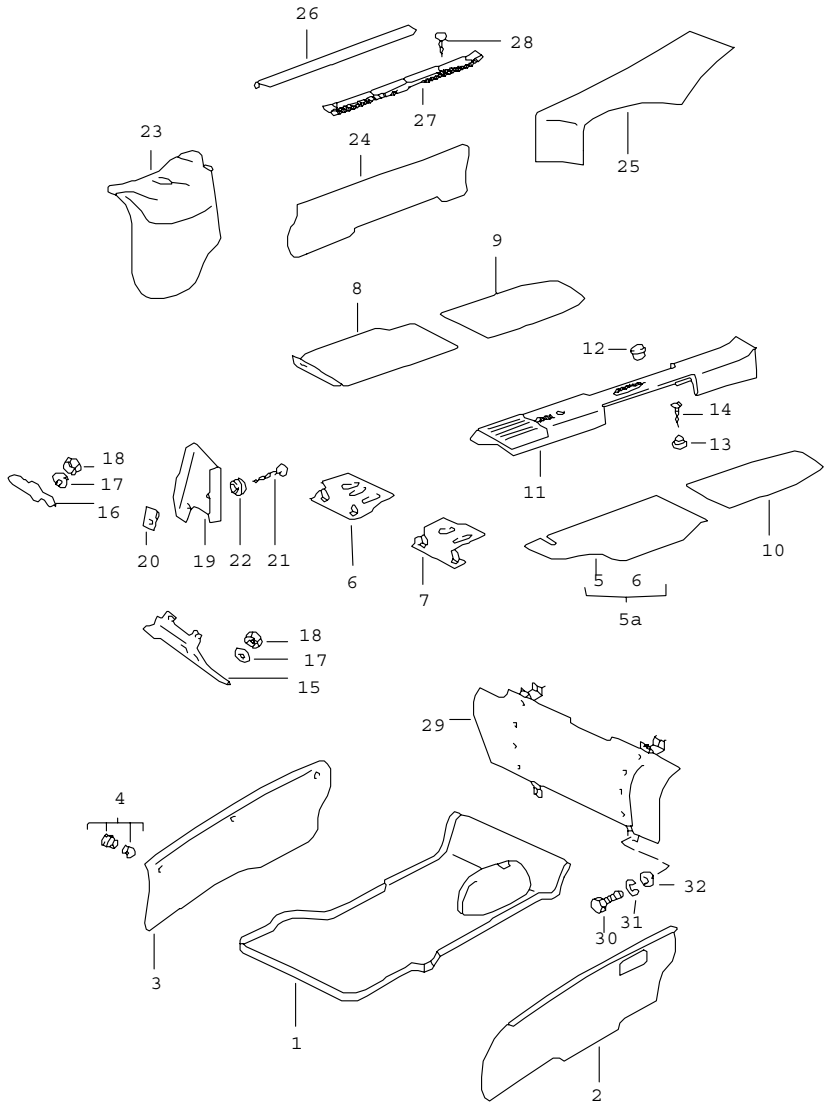

Pos	Part Number	Name	Remarks	Qty	Model
		interior equipment front			
1	911 551 045 03	front-compartment carpet	/LL	1	
2	911 551 049 02	front trunk side wall	/L	1	
3	A 911 551 050 00	front trunk side wall	/R -79	1	
3	911 551 050 01	front trunk side wall	/R	1	
3	911 551 050 01	front trunk side wall	/R	1	
4	A 911 503 075 00	desk pad		6	
4	911 503 075 00	desk pad		6	
5	911 551 021 00	carpet velour pile	/LL/L -78	1	COUPE
	8AB	lobster			
	5AZ	cork			
	7AZ	black			
	20B	dark green			
	40A	brown			
	8AZ	light red			
	1AY	yellow			
5	911 551 021 00	carpet cut pile	/LL/L 79-	1	COUPE
	5AF	cork			
	70E	black			
	2AF	dark green			
	40E	brown			
	8AF	light red			
	1AF	yellow			
	30B	dark blue	80-		
	50B	beige	80-		
	20S	mint green	81-		
	80E	burgundy			
	60A	grey	83-		

Pos	Part Number	Name	Remarks	Qty	Model
	2FL	grey-beige	83-		
	6JD	dark green	83-		
	80S	can-can-red	83-		
	1VD	champagne	83-		
(5)	911 551 021 01	carpet	/LL/L	1	COUPE:M 399 SPM
		velour pile	-78		
	8AB	lobster			
	5AZ	cork			
	7AZ	black			
	20B	dark green			
	40A	brown			
	8AZ	light red			
	1AY	yellow			
(5)	911 551 021 01	carpet	/LL/L	1	COUPE:M 399 SPM
		cut pile	79-		
	5AF	cork			
	70E	black			
	2AF	dark green			
	40E	brown			
	8AF	light red			
	1AF	yellow			
	30B	dark blue	80-		
	50B	beige	80-		
(5)	911 551 021 40	carpet velour pile	/LL/L -78	1	TARGA/CABRIO
	8AB	lobster			
	5AZ	cork			
	7AZ	black			
	20B	dark green			
	40A	brown			
	8AZ	light red			
	1AY	yellow			
(5)	911 551 021 40	carpet cut pile	/LL/L 79-	1	TARGA/CABRIO
	5AF	cork			
	70E	black			
	2AF	dark green			
	40E	brown			
	8AF	light red			
	1AF	yellow			
	30B	dark blue	80-		
	50B	beige	80-		
	20S	mint green	81-		
	80E	burgundy			
	60A	grey	83-		
	2FL	grey-beige	83-		
	6JD	dark green	83-		
	80S	can-can-red	83-		
	1VD	champagne	83-		
(5)	911 551 021 41	carpet velour pile	/LL/L-80 -78	1	TARGA:SPM
	8AB	lobster			
	5AZ	cork			
	7AZ	black			
	20B	dark green			
	40A	brown			
	8AZ	light red			
	1AY	yellow			
(5)	911 551 021 41	carpet cut pile	/LL/L-80 79-	1	TARGA:SPM
	5AF	cork			

Pos	Part Number	Name	Remarks	Qty	Model
	70E	black			
	2AF	dark green			
	40E	brown			
	8AF	light red			
	1AF	yellow			
	30B	dark blue	80		
	50B	beige	80		
	80E	burgundy			
(5)	911 551 911 00	floor mat with logo 911	/LL/L	1	
	4KD	brown			
	7KD	black			
	3KD	blue			
(5)	911 551 021 02	carpet with logo 911	/V/L	1	
	8AY	russet			
6	911 551 015 02	carpet velour pile	/LL/L -78	1	COUPE
	8AB	lobster			
	5AZ	cork			
	7AZ	black			
	20B	dark green			
	40A	brown			
	8AZ	light red			
	1AY	yellow			
6	911 551 015 02	carpet cut pile	/LL/L 79-	1	COUPE
	5AF	cork			
	70E	black			
	2AF	dark green			
	40E	brown			
	8AF	light red			
	1AF	yellow			
	30B	dark blue	80-		
	50B	beige	80-		
	20S	mint green	81-		
	8AY	russet	80		
	80E	burgundy			
	60A	grey	83-		
	2FL	grey-beige	83-		
	6JD	dark green	83-		
	80S	can-can-red	83-		
	1VD	champagne	83-		
(6)	911 551 015 42	carpet velour pile	/LL/L -78	1	TARGA/CABRIO
	8AB	lobster			
	5AZ	cork			
	7AZ	black			
	20B	dark green			
	40A	brown			
	8AZ	light red			
	1AY	yellow			
(6)	911 551 015 42	carpet cut pile	/LL/L 79-	1	TARGA/CABRIO
	5AF	cork			
	70E	black			
	2AF	dark green			
	40E	brown			
	8AF	light red			

Pos	Part Number	Name	Remarks	Qty	Model
	1AF	yellow			
	30B	dark blue	80-		
	50B	beige	80-		
	20S	mint green	81-		
	80E	burgundy			
	60A	grey	83-		
	2FL	grey-beige	83-		
	6JD	dark green	83-		
	80S	can-can-red	83-		
	1VD	champagne	83-		
7	911 551 015 06	carpet velour pile	/LL/L-79 -78	1	SPM
	8AB	lobster			
	5AZ	cork			
	7AZ	black			
	20B	dark green			
	40A	brown			
	8AZ	light red			
	1AY	yellow			
7	911 551 015 06	carpet cut pile	/LL/L-79 79-	1	SPM
	5AF	cork			
	70E	black			
	2AF	dark green			
	40E	brown			
	8AF	light red			
	1AF	yellow			
	80E	burgundy			M 403
8	911 551 012 10	carpet velour pile	/LL/R -78	1	COUPE
	8AB	lobster			
	5AZ	cork			
	7AZ	black			
	20B	dark green			
	40A	brown			
	8AZ	light red			
	1AY	yellow			
8	911 551 012 10	carpet cut pile	/LL/R 79	1	COUPE
	5AF	cork			
	70E	black			
	2AF	dark green			
	40E	brown			
	8AF	light red			
	1AF	yellow			
8	911 551 012 14	carpet cut pile	/LL/R 80-	1	COUPE
	5AF	cork			
	70E	black			
	2AF	dark green			
	40E	brown			
	8AF	light red			
	1AF	yellow			
	30B	dark blue			
	50B	beige			
	20S	mint green	81-		
	8AY	russet	80		
	80E	burgundy			
	60A	grey	83-		
	2FL	grey-beige	83-		
	6JD	dark green	83-		

Pos	Part Number	Name	Remarks	Qty	Model
	80S	can-can-red	83-		
	1VD	champagne	83-		
(8)	911 551 012 11	carpet	/LL/R *	1	COUPE: M 399/559
		velour pile	-78		
	8AB	lobster			
	5AZ	cork			
	7AZ	black			
	20B	dark green			
	40A	brown			
	8AZ	light red			
	1AY	yellow			
(8)	911 551 012 11	carpet	/LL/R *	1	COUPE: M 399/559
		cut pile	79-		
	5AF	cork			
	70E	black			
	2AF	dark green			
	40E	brown			
	8AF	light red			
	1AF	yellow			
8	911 551 012 15	carpet cut pile	/LL/R 80-	1	COUPE:M 559
	5AF	cork			
	70E	black			
	2AF	dark green			
	40E	brown			
	8AF	light red			
	1AF	yellow			
	30B	dark blue			
	50B	beige			
	20S	mint green	81-		
	80E	burgundy			
	60A	grey	83-		
	2FL	grey-beige	83-		
	6JD	dark green	83-		
	80S	can-can-red	83-		
	1VD	champagne	83-		
(8)	911 551 012 50	carpet	/LL/R	1	TARGA:SPM M 399/559
		velour pile	-78		
	8AB	lobster			
	5AZ	cork			
	7AZ	black			
	20B	dark green			
	40A	brown			
	8AZ	light red			
	1AY	yellow			
(8)	911 551 012 50	carpet	/LL/R	1	TARGA:SPM M 399/559
		cut pile	79-		
	5AF	cork			
	70E	black			
	2AF	dark green			
	40E	brown			
	8AF	light red			
	1AF	yellow			
	30B	dark blue			
	50B	beige			
	20S	mint green	81-		
	80E	burgundy			
	60A	grey	83-		
	2FL	grey-beige	83-		

Pos	Part Number	Name	Remarks	Qty	Model
	6JD	dark green	83-		
	80S	can-can-red	83-		
	1VD	champagne	83-		
(8)	911 551 012 49	carpet velour pile	/LL/R -78	1	TARGA
	8AB	lobster			
	5AZ	cork			
	7AZ	black			
	20B	dark green			
	40A	brown			
	8AZ	light red			
	1AY	yellow			
(8)	911 551 012 49	carpet cut pile	/LL/R 79	1	TARGA
	5AF	cork			
	70E	black			
	2AF	dark green			
	40E	brown			
	8AF	light red			
	1AF	yellow			
	80E	burgundy			
(8)	911 551 012 53	carpet cut pile	/LL/R 80-	1	TARGA/CABRIO
	5AF	cork			
	70E	black			
	2AF	dark green			
	40E	brown			
	8AF	light red			
	1AF	yellow			
	30B	dark blue			
	50B	beige			
	20S	mint green	81-		
	8AY	russet	80		
	80E	burgundy			
	60A	grey	83-		
	2FL	grey-beige	83-		
	6JD	dark green	83-		
	80S	can-can-red	83-		
	1VD	champagne	83-		
(8)	911 551 012 54	carpet cut pile	/LL/R 80-	1	TARGA/ CABRIO:M 559
	5AF	cork			
	70E	black			
	2AF	dark green			
	40E	brown			
	8AF	light red			
	1AF	yellow			
	30B	dark blue			
	50B	beige			
	20S	mint green	81-		
	8AY	russet	80		
	80E	burgundy			
	60A	grey	83-		
	2FL	grey-beige	83-		
	6JD	dark green	83-		
	80S	can-can-red	83-		
	1VD	champagne	83-		
(8)	911 551 912 00	floor mat with logo 911	/R	1	
	4KD	brown			

Pos	Part Number	Name	Remarks	Qty	Model
	7KD	black			
	3KD	blue			
(8)	911 551 012 16	carpet with logo 911	/V/R	1	
	8AY	russet			
9	911 551 014 04	carpet velour pile	/H/R -79 -78	1	
	8AB	lobster			
	5AZ	cork			
	7AZ	black			
	20B	dark green			
	40A	brown			
	8AZ	light red			
	1AY	yellow			
(9)	911 551 014 05	carpet velour pile	/H/R 80- -78	1	
	8AB	lobster			
	5AZ	cork			
	7AZ	black			
	20B	dark green			
	40A	brown			
	8AZ	light red			
	1AY	yellow			
9	911 551 014 04	carpet cut pile	/H/R -79 79-	1	
	5AF	cork			
	70E	black			
	2AF	dark green			
	40E	brown			
	8AF	light red			
	1AF	yellow			
	80E	burgundy			
(9)	911 551 014 05	carpet cut pile	/H/R 80- 79-	1	
	5AF	cork			
	70E	black			
	2AF	dark green			
	40E	brown			
	8AF	light red			
	1AF	yellow			
	30B	dark blue	80-		
	50B	beige	80-		
	20S	mint green	81-		
	8AY	russet	80		
	80E	burgundy			
	60A	grey	83-		
	2FL	grey-beige	83-		
	6JD	dark green	83-		
	80S	can-can-red	83-		
	1VD	champagne	83-		
10	911 551 013 03	carpet velour pile	/H/L -78	1	
	8AB	lobster			
	5AZ	cork			
	7AZ	black			
	20B	dark green			
	40A	brown			
	8AZ	light red			
	1AY	yellow			
10	911 551 013 03	carpet cut pile	/H/L 79-	1	

Pos	Part Number	Name	Remarks	Qty	Model
	5AF	cork			
	70E	black			
	2AF	dark green			
	40E	brown			
	8AF	light red			
	1AF	yellow			
	30B	dark blue	80-		
	50B	beige	80-		
	20S	mint green	81-		
	8AY	russet	80		
	80E	burgundy			
	60A	grey	83-		
	2FL	grey-beige	83-		
	6JD	dark green	83-		
	80S	can-can-red	83-		
	1VD	champagne	83-		
11	911 551 411 39	carpet for tunnel velour pile	-78	1	
	8AB	lobster			
	5AZ	cork			
	7AZ	black			
	20B	dark green			
	40A	brown			
	8AZ	light red			
	1AY	yellow			
11	911 551 411 39	carpet for tunnel cut pile	79-	1	
	5AF	cork			
	70E	black			
	2AF	dark green			

Pos	Part Number	Name	Remarks	Qty	Model
	40E	brown			
	8AF	light red			
	1AF	yellow			
	30B	dark blue	80-		
	50B	beige	80-		
	20S	mint green	81-		
	8AY	russet	80		
	80E	burgundy			
	60A	grey	83-		
	2FL	grey-beige	83-		
	6JD	dark green	83-		
	80S	can-can-red	83-		
	1VD	champagne	83-		
12	999 591 801 17	push button for carpet		2	
13	999 591 805 12	push button		2	
14	900 145 043 00	tapping screw B 3,5 X 9,5		2	
15	911 551 063 04	pedal floor board	/LL/L	1	COUPE
(15)	911 551 063 03	pedal floor board	/LL/L	1	COUPE:SPM
(15)	911 551 063 44	pedal floor board	/LL/L	1	TARGA/CABRIO
(15)	911 551 063 42	pedal floor board	/LL/L	1	TARGA:SPM
16	901 551 064 22	pedal floor board	/LL/R	1	COUPE
(16)	901 551 064 42	floorboard	/LL/R	1	TARGA/CABRIO
17	N 042 121 3	shake-proof washer A 6,4		1	COUPE
18	900 076 010 02	hexagon nut M 6		1	COUPE
23	911 551 042 05	carpet wheel housing velour pile	/LL/R -78	1	
	8AB	lobster			
	5AZ	cork			

Pos	Part Number	Name	Remarks	Qty	Model
	7AZ	black			
	20B	dark green			
	40A	brown			
	8AZ	light red			
	1AY	yellow			
(23)	911 551 041 03	carpet wheel housing velour pile	/L -78	1	
	8AB	lobster			
	5AZ	cork			
	7AZ	black			
	20B	dark green			
	40A	brown			
	8AZ	light red			
	1AY	yellow			
23	911 551 042 05	carpet cut pile	/LL/R 79-	1	
	5AF	cork			
	70E	black			
	2AF	dark green			
	40E	brown			
	8AF	light red			
	1AF	yellow			
	30B	dark blue	80-		
	50B	beige	80-		
	20S	mint green	81-		
	8AY	russet	80		
	80E	burgundy			
	60A	grey	83-		
	2FL	grey-beige	83-		
	6JD	dark green	83-		
	80S	can-can-red	83-		
	1VD	champagne	83-		
(23)	911 551 041 03	carpet cut pile	/L 79-	1	
	5AF	cork			
	70E	black			
	2AF	dark green			
	40E	brown			
	8AF	light red			
	1AF	yellow			
	30B	dark blue	80-		
	50B	beige	80-		
	20S	mint green	81-		
	8AY	russet	80		
	80E	burgundy			
	60A	grey	83-		
	2FL	grey-beige	83-		
	6JD	dark green	83-		
	80S	can-can-red	83-		
	1VD	champagne	83-		
24	911 551 032 50	carpet velour pile	/R -78	1	
	8AB	lobster			
	5AZ	cork			
	7AZ	black			
	20B	dark green			
	40A	brown			
	8AZ	light red			
	1AY	yellow			
(24)	911 551 031 50	carpet velour pile	/L -78	1	

Pos	Part Number	Name	Remarks	Qty	Model
	8AB	lobster			
	5AZ	cork			
	7AZ	black			
	20B	dark green			
	40A	brown			
	8AZ	light red			
	1AY	yellow			
24	911 551 032 50	carpet cut pile	/R 79-	1	
	5AF	cork			
	70E	black			
	2AF	dark green			
	40E	brown			
	8AF	light red			
	1AF	yellow			
	30B	dark blue	80-		
	50B	beige	80-		
	20S	mint green	81-		
	8AY	russet	80		
	80E	burgundy			
	60A	grey	83-		
	2FL	grey-beige	83-		
	6JD	dark green	83-		
	80S	can-can-red	83-		
	1VD	champagne	83-		
(24)	911 551 031 50	carpet cut pile	/L 79-	1	
	5AF	cork			
	70E	black			
	2AF	dark green			
	40E	brown			
	8AF	light red			
	1AF	yellow			
	30B	dark blue	80-		
	50B	beige	80-		
	20S	mint green	81-		
	8AY	russet	80		
	80E	burgundy			
	60A	grey	83-		
	2FL	grey-beige	83-		
	6JD	dark green	83-		
	80S	can-can-red	83-		
	1VD	champagne	83-		
25	911 551 034 02	carpet velour pile	/R -78	1	
	8AB	lobster			
	5AZ	cork			
	7AZ	black			
	20B	dark green			
	40A	brown			
	8AZ	light red			
	1AY	yellow			
(25)	911 551 033 02	carpet velour pile	/L -78	1	
	8AB	lobster			
	5AZ	cork			
	7AZ	black			
	20B	dark green			
	40A	brown			
	8AZ	light red			

Pos	Part Number	Name	Remarks	Qty	Model
	1AY	yellow			
25	911 551 034 02	carpet cut pile	/R 79-	1	
	5AF	cork			
	70E	black			
	2AF	dark green			
	40E	brown			
	8AF	light red			
	1AF	yellow			
	30B	dark blue	80-		
	50B	beige	80-		
	20S	mint green	81-		
	8AY	russet	80		
	80E	burgundy			
	60A	grey	83-		
	2FL	grey-beige	83-		
	6JD	dark green	83-		
	80S	can-can-red	83-		
	1VD	champagne	83-		
(25)	911 551 033 02	carpet cut pile	/L 79-	1	
	5AF	cork			
	70E	black			
	2AF	dark green			
	40E	brown			
	8AF	light red			
	1AF	yellow			
	30B	dark blue	80-		
	50B	beige	80-		
	20S	mint green	81-		

Pos	Part Number	Name	Remarks	Qty	Model
	8AY	russet	80		
	80E	burgundy			
	60A	grey	83-		
	2FL	grey-beige	83-		
	6JD	dark green	83-		
	80S	can-can-red	83-		
	1VD	champagne	83-		
(26)	A 901 551 115 20	scuff plate	/L	1	
(26)	911 551 619 00	rubber pad	/L	1	
26	A 901 551 116 20	scuff plate	/R	1	
26	911 551 620 00	rubber pad	/R	1	
27	901 551 419 50	cover strip aluminium		2	
27	901 551 419 28	cover strip black		2	
28	900 145 041 07	tapping screw black B 3,5 X 16		10	
28	900 145 041 00	tapping screw B 3,5 X 16		10	
29	911 551 067 03	luggage boot trim	/LL	1	
30	900 075 260 02	hexagon-head bolt M 6 X 16		4	
31	N 012 007 2	lock ring A 6		4	
32	900 151 003 02	washer 6,4		4	
		- -- E N D -- -			

Model	Year	MG	SG	Illustration	Restrictions	Update				
911	83	8	07	807-05		203	11:27	18.08.2006	PORSCHE	PET	PORSCHE

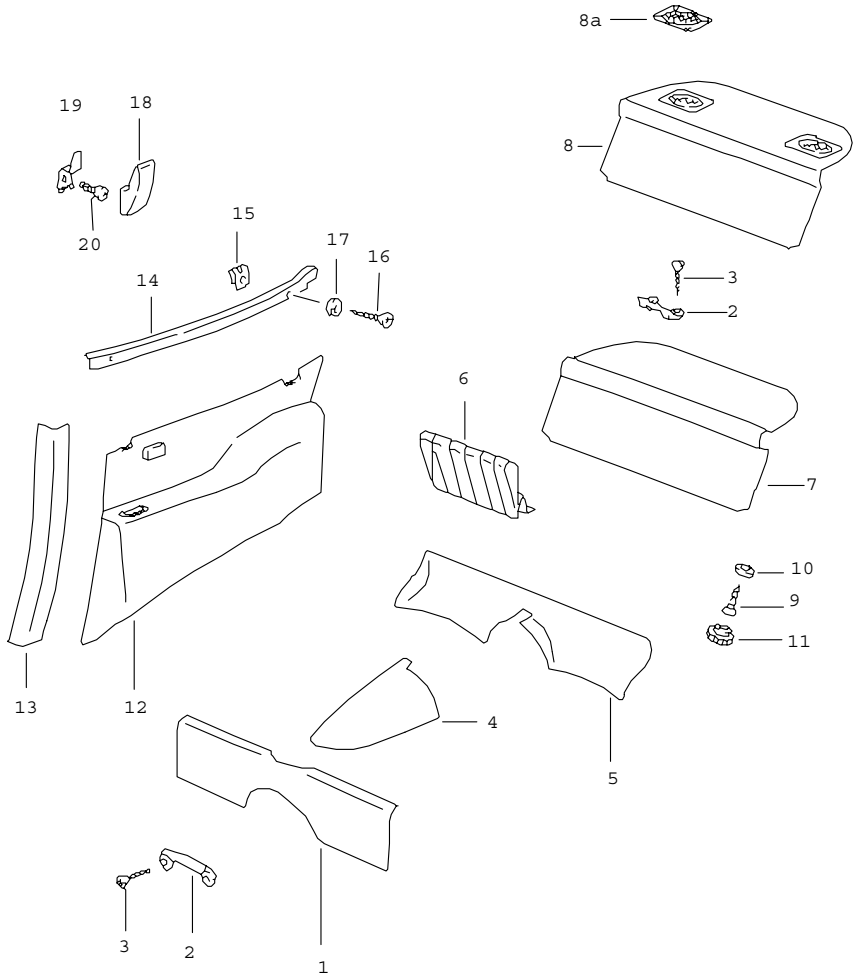

Pos	Part Number	Name	Remarks	Qty	Model
		interior equipment rear			
1	911 551 051 04	carpet heel plate velour pile	-78	1	
	8AB	lobster			
	5AZ	cork			
	7AZ	black			
	20B	dark green			
	40A	brown			
	8AZ	light red			
	1AY	yellow			
1	911 551 051 04	carpet heel plate cut pile	79-	1	
	5AF	cork			
	70E	black			
	2AF	dark green			
	40E	brown			
	8AF	light red			
	1AF	yellow			
	30B	dark blue	80		
	50B	beige	80		
	20S	mint green	81-		
	8AY	russet	80		
	80E	burgundy			
	60A	grey	83-		
	2FL	grey-beige	83-		
	6JD	dark green	83-		
	80S	can-can-red	83-		
	1VD	champagne	83-		
2	477 885 761	holder	-79	4	

Pos	Part Number	Name	Remarks	Qty	Model
3	900 270 049 07	countersunk-head screw AM 5 X 20	-79	8	
4	911 551 023 00	carpet seat well centre velour pile	-78	1	
	8AB	lobster			
	5AZ	cork			
	7AZ	black			
	20B	dark green			
	40A	brown			
	8AZ	light red			
	1AY	yellow			
4	911 551 023 00	carpet seat well centre cut pile	79-	1	
	5AF	cork			
	70E	black			
	2AF	dark green	-82		
	40E	brown			
	8AF	light red			
	1AF	yellow			
	30B	dark blue	80-		
	50B	beige	81-		
	20S	mint green	80-		
	8AY	russet	80		
	80E	burgundy			
	60A	grey	83-		
	2FL	grey-beige	83-		
	6JD	dark green	83-		
	80S	can-can-red	83-		
	1VD	champagne	83-		
5	911 551 054 03	carpet seat well velour pile	-78	1	
	8AB	lobster			
	5AZ	cork			
	7AZ	black			
	20B	dark green			
	40A	brown			
	8AZ	light red			
	1AY	yellow			
5	911 551 054 03	carpet seat well cut pile	79-	1	
	5AF	cork			
	70E	black			
	2AF	dark green			
	40E	brown			
	8AF	light red			
	1AF	yellow			
	30B	dark blue	80-		
	50B	beige	80-		
	20S	mint green	81-		
	8AY	russet	80-		
	80E	burgundy			
	60A	grey	83-		
	2FL	grey-beige	83-		
	6JD	dark green	83-		
	80S	can-can-red	83-		
	1VD	champagne	83-		
6	911 522 062 02	carpet velour pile	/R 78	1	
	8AB	lobster			

Pos	Part Number	Name	Remarks	Qty	Model
	5AZ	cork			
	7AZ	black			
	20B	dark green			
	40A	brown			
	8AZ	light red			
	1AY	yellow			
(6)	911 522 061 02	carpet velour pile	/L 78	1	SC
	8AB	lobster			
	5AZ	cork			
	7AZ	black			
	20B	dark green			
	40A	brown			
	8AZ	light red			
	1AY	yellow			
(6)	930 522 061 00	carpet velour pile	/L 78	1	TURBO
	8AB	lobster			
	5AZ	cork			
	7AZ	black			
	20B	dark green			
	40A	brown			
	8AZ	light red			
	1AY	yellow			
6	911 522 062 03	carpet cut pile	/R 79-	1	
	5AF	cork			
	70E	black			
	2AF	dark green			
	40E	brown			
	8AF	light red			
	1AF	yellow			
	30B	blue	80-		
	50B	beige	80-		
	20S	mint green	81-		
	8AY	russet	80		
	80E	burgundy			
	60A	grey	83-		
	2FL	grey-beige	83-		
	6JD	dark green	83-		
	80S	can-can-red	83-		
(6)	911 522 061 03	carpet cut pile	/L 79-	1	SC
	5AF	cork			
	70E	black			
	2AF	dark green			
	40E	brown			
	8AF	light red			
	1AF	yellow			
	30B	blue	80-		
	50B	beige	80-		
	20S	mint green	81-		
	8AY	russet	80		
	80E	burgundy			
	60A	grey	83-		
	2FL	grey-beige	83-		
	6JD	dark green	83-		
	80S	can-can-red	83-		
(6)	930 522 061 01	carpet cut pile	/L 79-	1	TURBO
	5AF	cork			

Pos	Part Number	Name	Remarks	Qty	Model
	70E	black			
	2AF	dark green			
	40E	brown			
	8AF	light red			
	1AF	yellow			
	30B	blue	80-		
	50B	beige	80-		
	20S	mint green	81-		
	8AY	russet	80		
	80E	burgundy			
	60A	grey	83-		
	2FL	grey-beige	83-		
	6JD	dark green	83-		
	80S	can-can-red	83-		
7	911 555 075 03	back wall lining leatherette/ pin stripe velour	-78	1	COUPE
	8AK	lobster/lobster			
	5AK	cork/cork			
	7AK	black/black			
	8ZT	black/lobster			
	5ZT	black/cork			
(7)	911 555 075 43	back wall lining leatherette/ pin stripe velour	-78	1	TARGA
	8AK	lobster/lobster			
	5AK	cork/cork			
	7AK	black/black			
	8ZT	black/lobster			
	5ZT	black/cork			
7	911 555 075 03	back wall lining leatherette/ tartan cloth	-78	1	COUPE
	8ZU	lobster/ brown-beige			
	5ZU	cork/ brown-beige			
	8ZZ	black/ red-blue			
(7)	911 555 075 43	back wall lining leatherette/ tartan cloth	-78	1	TARGA
	8ZU	lobster/ brown-beige			
	5ZU	cork/ brown-beige			
	8ZZ	black/ red-blue			
(7)	911 555 075 06	back wall lining leatherette		1	COUPE
	8AU	lobster	-78		
	5AU	cork			
	7AU	black	-82		
	4AU	brown	79-82		
	3AU	dark blue	80-82		
	5BC	beige	80-		
	3MK	burgundy/burgundy	83-		
	05T	black/black	83-		
	1HH	blue/blue	83-		
	4RB	brown/brown	83-		
(7)	911 555 075 46	back wall lining leatherette		1	TARGA
	8AU	lobster	-78		
	5AU	cork			
	7AU	black	-82		

Pos	Part Number	Name	Remarks	Qty	Model
	4AU	brown	79-82		
	3AU	dark blue	80-82		
	5BC	beige	80-		
	3MK	burgundy/burgundy	83-		
	05T	black/black	83-		
	1HH	blue/blue	83-		
	4RB	brown/brown	83-		
(7)	911 555 075 80	back wall lining leather		1	COUPE
	8AH	lobster	-78		
	5AH	cork	-79		
	7AG	black	-79		
	20B	dark green			
	2AP	light green	-78		
	3NG	brown	-82		
	3AG	blue	-79		
	8AT	light red	-79		
	1AG	yellow	-79		
	9AG	white	-79		
	1AJ	black	80-82		
	30B	dark blue	80-82		
	50B	beige	80-		
	30A	blue	80		
	80B	light red	80		
	10A	yellow	80		
	99A	white	80		
	40D	cork	80		
	80S	can-can-red	81-		
	95S	papyrus	81-		
	60S	hannibal grey	81-		

Pos	Part Number	Name	Remarks	Qty	Model
	20S	mint green	81-		
	6AD	doric grey	80		
	KZ2	black/black	83-		
	KZ3	blue/blue	83-		
	KZ5	brown/brown	83-		
	LG7	burgundy/burgundy	83-		
	LG6	dark green	83-		
(7)	911 555 075 81	back wall lining leather		1	TARGA
	8AH	lobster	-78		
	5AH	cork	-79		
	7AG	black	-79		
	20B	dark green			
	2AP	light green	-78		
	3NG	brown	-82		
	3AG	blue	-79		
	8AT	light red	-79		
	1AG	yellow	-79		
	9AG	white	-79		
	1AJ	black	80-82		
	30B	dark blue	80-82		
	50B	beige	80-		
	30A	blue	80		
	80B	light red	80		
	10A	yellow	80		
	99A	white	80		
	40D	cork	80		
	80S	can-can-red	81-		
	95S	papyrus	81-		
	60S	hannibal grey	81-		

Pos	Part Number	Name	Remarks	Qty	Model
	20S	mint green	81-		
	6AD	doric grey	80		
	KZ2	black/black	83-		
	KZ3	blue/blue	83-		
	KZ5	brown/brown	83-		
	LG7	burgundy/burgundy	83-		
	LG6	dark green	83-		
(7)	911 555 075 09	back wall lining leather/ pin stripe velour	-78	1	COUPE
	8AK	lobster/lobster			
	5AK	cork/cork			
	7AK	black/black			
	8ZT	black/lobster			
	5ZT	black/cork			
(7)	911 555 075 49	back wall lining leather/ pin stripe velour	-78	1	TARGA
	8AK	lobster/lobster			
	5AK	cork/cork			
	7AK	black/black			
	8ZT	black/lobster			
	5ZT	black/cork			
(7)	911 555 075 09	back wall lining leather/ tartan cloth	-78	1	COUPE
	8ZU	lobster/ brown-beige			
	5ZU	cork/ brown-beige			
	8ZZ	black/ red-blue			
	2ZZ	black/ green-blue			
	4ZZ	black/ brown-beige			
(7)	911 555 075 49	back wall lining leather/ tartan cloth	-78	1	TARGA
	8ZU	lobster/ brown-beige			
	5ZU	cork/ brown-beige			
	8ZZ	black/ red-blue			
	2ZZ	black/ green-blue			
	4ZZ	black/ brown-beige			
8	911 645 007 13	back wall lining leatherette/ pin stripe velour	-78	1	COUPE
	8AK	lobster/lobster			
	5AK	cork/cork			
	7AK	black/black			
	8ZT	black/lobster			
	5ZT	black/cork			
8	911 645 007 43	back wall lining leatherette/ pin stripe velour	-78	1	TARGA
	8AK	lobster/lobster			
	5AK	cork/cork			
	7AK	black/black			
	8ZT	black/lobster			
	5ZT	black/cork			
8	911 645 007 13	back wall lining leatherette/ tartan cloth	-78	1	COUPE
	8ZU	lobster/ brown-beige			

Pos	Part Number	Name	Remarks	Qty	Model
	5ZU	cork/ brown-beige			
	8ZZ	black/ red-blue			
8	911 645 007 43	back wall lining leatherette/ tartan cloth	-78	1	TARGA
	8ZU	lobster/ brown-beige			
	5ZU	cork/ brown-beige			
	8ZZ	black/ red-blue			
8	A 911 555 111 00	back wall lining leatherette		1	COUPE
	8AU	lobster	-78		
	5AU	cork			
	7AU	black	-82		
	4AU	brown	79-82		
	3AU	dark blue	80-82		
	5BC	beige	80-		
	05T	black/black	83-		
	1HH	blue/blue	83-		
	4RB	brown/brown	83-		
	3MK	burgundy/burgundy	83-		
8	911 555 111 10	back wall lining leatherette		1	COUPE
	8AU	lobster	-78		
	5AU	cork			
	7AU	black	-82		
	4AU	brown	79-82		
	3AU	dark blue	80-82		
	5BC	beige	80-		
	05T	black/black	83-		
	1HH	blue/blue	83-		
	4RB	brown/brown	83-		
	3MK	burgundy/burgundy	83-		
8	A 911 555 111 40	back wall lining leatherette		1	TARGA
	8AU	lobster	-78		
	5AU	cork			
	7AU	black	-82		
	4AU	brown	79-82		
	3AU	dark blue	80-82		
	5BC	beige	80-		
	05T	black/black	83-		
	1HH	blue/blue	83-		
	4RB	brown/brown	83-		
	3MK	burgundy/burgundy	83-		
8	911 555 112 00	back wall lining leatherette		1	TARGA
	8AU	lobster	-78		
	5AU	cork			
	7AU	black	-82		
	4AU	brown	79-82		
	3AU	dark blue	80-82		
	5BC	beige	80-		
	05T	black/black	83-		
	1HH	blue/blue	83-		
	4RB	brown/brown	83-		
	3MK	burgundy/burgundy	83-		
8	A 911 555 111 01	back wall lining leather		1	COUPE
	8AH	lobster	-78		
	5AH	cork	-79		

Pos	Part Number	Name	Remarks	Qty	Model	Pos	Part Number	Name	Remarks	Qty	Model
	7AG	black	-79				7AG	black	-79		
	20B	dark green					20B	dark green			
	2AP	light green	78				2AP	light green	78		
	3NG	brown	-82				3NG	brown	-82		
	3AG	blue	-79				3AG	blue	-79		
	8AT	light red	-79				8AT	light red	-79		
	1AG	yellow	-79				1AG	yellow	-79		
	9AG	white	-79				9AG	white	-79		
	1AJ	black	80-82				1AJ	black	80-82		
	30B	dark blue	80-82				30B	dark blue	80-82		
	50B	beige	80-				50B	beige	80-		
	30A	blue	80-				30A	blue	80-		
	80B	light red	80-				80B	light red	80-		
	10A	yellow	80-				10A	yellow	80-		
	99A	white	80-				99A	white	80-		
	40D	cork	80-				40D	cork	80-		
	80S	can-can-red	81-				80S	can-can-red	81-		
	95S	papyrus	81-				95S	papyrus	81-		
	60S	hannibal grey	81-				60S	hannibal grey	81-		
	20S	mint green	81-				20S	mint green	81-		
	6AD	doric grey	80				6AD	doric grey	80		
	KZ2	black/black	83-				KZ2	black/black	83-		
	KZ3	blue/blue	83-				KZ3	blue/blue	83-		
	KZ5	brown/brown	83-				KZ5	brown/brown	83-		
	LG7	burgundy/burgundy	83-				LG7	burgundy/burgundy	83-		
	LG6	dark green	83				LG6	dark green	83		
8	911 555 111 11	back wall lining leather		1	COUPE	8	A 911 555 111 42	back wall lining leather		1	TARGA
	8AH	lobster	-78				8AH	lobster	-78		
	5AH	cork	-79				5AH	cork	-79		

Pos	Part Number	Name	Remarks	Qty	Model
	7AG	black	-79		
	20B	dark green			
	2AP	light green	78		
	3NG	brown	-82		
	3AG	blue	-79		
	8AT	light red	-79		
	1AG	yellow	-79		
	9AG	white	-79		
	1AJ	black	80-82		
	30B	dark blue	80-82		
	50B	beige	80-		
	30A	blue	80-		
	80B	light red	80-		
	10A	yellow	80-		
	99A	white	80-		
	40D	cork	80-		
	80S	can-can-red	81-		
	95S	papyrus	81-		
	60S	hannibal grey	81-		
	20S	mint green	81-		
	6AD	doric grey	80		
	KZ2	black/black	83-		
	KZ3	blue/blue	83-		
	KZ5	brown/brown	83-		
	LG7	burgundy/burgundy	83-		
	LG6	dark green	83		
8	911 555 112 01	back wall lining leather		1	TARGA
	8AH	lobster	-78		
	5AH	cork	-79		

Pos	Part Number	Name	Remarks	Qty	Model
	7AG	black	-79		
	20B	dark green			
	2AP	light green	78		
	3NG	brown	-82		
	3AG	blue	-79		
	8AT	light red	-79		
	1AG	yellow	-79		
	9AG	white	-79		
	1AJ	black	80-82		
	30B	dark blue	80-82		
	50B	beige	80-		
	30A	blue	80-		
	80B	light red	80-		
	10A	yellow	80-		
	99A	white	80-		
	40D	cork	80-		
	80S	can-can-red	81-		
	95S	papyrus	81-		
	60S	hannibal grey	81-		
	20S	mint green	81-		
	6AD	doric grey	80		
	KZ2	black/black	83-		
	KZ3	blue/blue	83-		
	KZ5	brown/brown	83-		
	LG7	burgundy/burgundy	83-		
	LG6	dark green	83		
8	911 645 007 10	back wall lining leather/ pin stripe velour	-78	1	COUPE
	8AK	lobster/lobster			

Pos	Part Number	Name	Remarks	Qty	Model
	5AK	cork/cork			
	7AK	black/black			
	8ZT	black/lobster			
	5ZT	black/cork			
8	911 645 007 52	back wall lining leather/ pin stripe velour	-78	1	TARGA
	8AK	lobster/lobster			
	5AK	cork/cork			
	7AK	black/black			
	8ZT	black/lobster			
	5ZT	black/cork			
8	911 645 007 10	back wall lining leather/ tartan cloth	-78	1	COUPE
	8ZU	lobster/ brown-beige			
	5ZU	cork/ brown-beige			
	8ZZ	black/ red-blue			
	2ZZ	black/ green-blue			
	4ZZ	black/ brown-beige			
8	911 645 007 52	back wall lining leather/ tartan cloth	-78	1	TARGA
	8ZU	lobster/ brown-beige			
	5ZU	cork/ brown-beige			
	8ZZ	black/ red-blue			
	2ZZ	black/ green-blue			
	4ZZ	black/ brown-beige			
8	911 645 007 10	back wall lining leather/ stripe design		1	COUPE:M 403
	HS6	burgundy/ grey-burgundy			
8A	911 555 019 00	loudspeaker grille		2	
9	900 145 072 07	tapping screw B 3,5 X 22		2	
10	999 591 102 17	washer		2	
12	911 555 071 05	side trim panel leatherette	/L	1	COUPE
	8AU	lobster	-78		
	5AU	cork			
	7AU	black	-82		
	4AU	brown	79-82		
	3AU	dark blue	80-82		
	5BC	beige	80-		
	3MK	burgundy	83-		
	4FK	grey-beige	83-		
	05T	black	83-		
	1HH	blue	83-		
	4RB	brown	83-		
(12)	911 555 072 05	side trim panel leatherette	/R	1	COUPE
	8AU	lobster	-78		
	5AU	cork			
	7AU	black	-82		
	4AU	brown	79-82		
	3AU	dark blue	80-82		
	5BC	beige	80-		
	3MK	burgundy	83-		

Pos	Part Number	Name	Remarks	Qty	Model
	4FK	grey-beige	83-		
	05T	black	83-		
	1HH	blue	83-		
	4RB	brown	83-		
(12)	911 555 071 47	side trim panel leatherette	/L	1	TARGA
	8AU	lobster	-78		
	5AU	cork			
	7AU	black	-82		
	4AU	brown	79-82		
	3AU	dark blue	80-82		
	5BC	beige	80-		
	3MK	burgundy	83-		
	4FK	grey-beige	83-		
	05T	black	83-		
	1HH	blue	83-		
	4RB	brown	83-		
(12)	911 555 072 47	side trim panel leatherette	/R	1	TARGA
	8AU	lobster	-78		
	5AU	cork			
	7AU	black	-82		
	4AU	brown	79-82		
	3AU	dark blue	80-82		
	5BC	beige	80-		
	3MK	burgundy	83-		
	4FK	grey-beige	83-		
	05T	black	83-		
	1HH	blue	83-		
	4RB	brown	83-		

Pos	Part Number	Name	Remarks	Qty	Model
(12)	911 555 071 76	side trim panel pin stripe velour	/L 78	1	TARGA
	8AK	lobster			
	5AK	cork			
	7AK	black			
(12)	911 555 072 76	side trim panel pin stripe velour	/R 78	1	TARGA
	8AK	lobster			
	5AK	cork			
	7AK	black			
(12)	911 555 071 76	side trim panel tartan cloth	/L 78	1	TARGA
	8AB	red-blue			
	2AC	green-blue			
	4AD	brown-beige			
(12)	911 555 072 76	side trim panel tartan cloth	/R 78	1	TARGA
	8AB	red-blue			
	2AC	green-blue			
	4AD	brown-beige			
(12)	911 555 071 07	side trim panel leather/ stripe design	/L	1	COUPE:M 403
	HS6	burgundy/ grey-burgundy			
(12)	911 555 072 07	side trim panel leather/ stripe design	/R	1	COUPE:M 403
	HS6	burgundy/ grey-burgundy			
(12)	911 555 071 76	side trim panel stripe design	/L	1	TARGA:M 403
	9LA	burgundy			
(12)	911 555 072 76	side trim panel stripe design	/R	1	TARGA:M 403

Pos	Part Number	Name	Remarks	Qty	Model
	9LA	burgundy			
(12)	911 555 071 74	side trim panel leather	/L	1	COUPE
	8AH	lobster	-78		
	5AH	cork	-79		
	7AG	black	-79		
	20B	dark green	-80		
	2AP	light green	-78		
	3NG	brown	-82		
	3AG	blue	-79		
	8AT	light red	-79		
	1AG	yellow	-79		
	9AG	white	-79		
	1AJ	black	80-82		
	30B	dark blue	80-82		
	50B	beige	80-		
	30A	blue	80		
	80B	light red	80		
	10A	yellow	80		
	99A	white	80		
	40D	cork	80		
	80S	can-can-red	81-		
	95S	papyrus	81-		
	60S	hannibal grey	81-		
	20S	mint green	81-		
	6AD	doric grey	80		
	LG7	burgundy	83-		
	KZ4	grey-beige	83-		
	LG4	pearl white	83-		
	LG5	champagne	83-		
	LG6	dark green	83-		
	KZ2	black	83-		
	KZ3	blue	83-		
	KZ5	brown	83-		
	KZ4	grey-beige	83-		
	KZ6	can-can-red	83-		
(12)	911 555 072 74	side trim panel leather	/R	1	COUPE
	8AH	lobster	-78		
	5AH	cork	-79		
	7AG	black	-79		
	20B	dark green	-80		
	2AP	light green	-78		
	3NG	brown	-82		
	3AG	blue	-79		
	8AT	light red	-79		
	1AG	yellow	-79		
	9AG	white	-79		
	1AJ	black	80-82		
	30B	dark blue	80-82		
	50B	beige	80-		
	30A	blue	80		
	80B	light red	80		
	10A	yellow	80		
	99A	white	80		
	40D	cork	80		
	80S	can-can-red	81-		
	95S	papyrus	81-		
	60S	hannibal grey	81-		
	20S	mint green	81-		

Pos	Part Number	Name	Remarks	Qty	Model
	6AD	doric grey	80		
	LG7	burgundy	83-		
	KZ4	grey-beige	83-		
	LG4	pearl white	83-		
	LG5	champagne	83-		
	LG6	dark green	83-		
	KZ2	black	83-		
	KZ3	blue	83-		
	KZ5	brown	83-		
	KZ4	grey-beige	83-		
	KZ6	can-can-red	83-		
(12)	911 555 071 78	side trim panel leather	/L	1	TARGA
	8AH	lobster	-78		
	5AH	cork	-79		
	7AG	black	-79		
	20B	dark green	-80		
	2AP	light green	-78		
	3NG	brown	-82		
	3AG	blue	-79		
	8AT	light red	-79		
	1AG	yellow	-79		
	9AG	white	-79		
	1AJ	black	80-82		
	30B	dark blue	80-82		
	50B	beige	80-		
	30A	blue	80		
	80B	light red	80		
	10A	yellow	80		
	99A	white	80		

Pos	Part Number	Name	Remarks	Qty	Model
	40D	cork	80		
	80S	can-can-red	81-		
	95S	papyrus	81-		
	60S	hannibal grey	81-		
	20S	mint green	81-		
	6AD	doric grey	80		
	LG7	burgundy	83-		
	KZ4	grey-beige	83-		
	LG4	pearl white	83-		
	LG5	champagne	83-		
	LG6	dark green	83-		
	KZ2	black	83-		
	KZ3	blue	83-		
	KZ5	brown	83-		
	KZ4	grey-beige	83-		
	KZ6	can-can-red	83-		
(12)	911 555 072 78	side trim panel leather	/R	1	TARGA
	8AH	lobster	-78		
	5AH	cork	-79		
	7AG	black	-79		
	20B	dark green	-80		
	2AP	light green	-78		
	3NG	brown	-82		
	3AG	blue	-79		
	8AT	light red	-79		
	1AG	yellow	-79		
	9AG	white	-79		
	1AJ	black	80-82		
	30B	dark blue	80-82		

Pos	Part Number	Name	Remarks	Qty	Model
	50B	beige	80-		
	30A	blue	80		
	80B	light red	80		
	10A	yellow	80		
	99A	white	80		
	40D	cork	80		
	80S	can-can-red	81-		
	95S	papyrus	81-		
	60S	hannibal grey	81-		
	20S	mint green	81-		
	6AD	doric grey	80		
	LG7	burgundy	83-		
	KZ4	grey-beige	83-		
	LG4	pearl white	83-		
	LG5	champagne	83-		
	LG6	dark green	83-		
	KZ2	black	83-		
	KZ3	blue	83-		
	KZ5	brown	83-		
	KZ4	grey-beige	83-		
	KZ6	can-can-red	83-		
13	911 555 757 00	cover lock pillar leatherette	/L	1	COUPE
	8AU	lobster	-78		
	5AU	cork	-78		
	7AU	black	-82		
	4AU	brown	79-82		
	3AU	dark blue	80-82		
	5BC	beige	80-		
	3MK	burgundy	83-		
	4FK	grey-beige	83-		
	05T	black	83-		
	1HH	blue	83-		
	4RB	brown	83-		
13	911 555 758 00	cover lock pillar leatherette	/R	1	COUPE
	8AU	lobster	-78		
	5AU	cork	-78		
	7AU	black	-82		
	4AU	brown	79-82		
	3AU	dark blue	80-82		
	5BC	beige	80-		
	3MK	burgundy	83-		
	4FK	grey-beige	83-		
	05T	black	83-		
	1HH	blue	83-		
	4RB	brown	83-		
(13)	911 555 757 40	cover lock pillar leatherette	/L	1	TARGA/CABRIO
	8AU	lobster	-78		
	5AU	cork	-78		
	7AU	black	-82		
	4AU	brown	79-82		
	3AU	dark blue	80-82		
	5BC	beige	80-		
	3MK	burgundy	83-		
	4FK	grey-beige	83-		
	05T	black	83-		

Pos	Part Number	Name	Remarks	Qty	Model
	1HH	blue	83-		
	4RB	brown	83-		
(13)	911 555 758 40	cover lock pillar leatherette	/R	1	TARGA/CABRIO
	8AU	lobster	-78		
	5AU	cork	-78		
	7AU	black	-82		
	4AU	brown	79-82		
	3AU	dark blue	80-82		
	5BC	beige	80-		
	3MK	burgundy	83-		
	4FK	grey-beige	83-		
	05T	black	83-		
	1HH	blue	83-		
	4RB	brown	83-		
13	911 555 757 70	cover lock pillar leather	/L	1	COUPE
	8AH	lobster	-78		
	5AH	cork	-79		
	7AG	black	-79		
	20B	dark green	-80		
	2AP	light green	-78		
	3NG	brown	-82		
	3AG	blue	-79		
	8AT	light red	-79		
	1AG	yellow	-79		
	9AG	white	-79		
	1AJ	black	80-82		
	30B	dark blue	80-82		

Pos	Part Number	Name	Remarks	Qty	Model
	50B	beige	80-		
	30A	blue	80		
	80B	light red	80		
	10A	yellow	80		
	99A	white	80		
	40D	cork	80		
	80S	can-can-red	81-		
	95S	papyrus	81-		
	60S	hannibal grey	81-		
	20S	mint green	81-		
	6AD	doric grey	80		
	2LB	burgundy			M 403
	LG7	burgundy	83-		
	KZ4	grey-beige	83-		
	8YD	pearl white	83-		
	1VD	champagne	83-		
	LG6	dark green	83-		
	KZ2	black	83-		
	KZ3	blue	83-		
	KZ5	brown	83-		
13	911 555 758 70	cover lock pillar leather	/R	1	COUPE
	8AH	lobster	-78		
	5AH	cork	-79		
	7AG	black	-79		
	20B	dark green	-80		
	2AP	light green	-78		
	3NG	brown	-82		
	3AG	blue	-79		

Pos	Part Number	Name	Remarks	Qty	Model
	8AT	light red	-79		
	1AG	yellow	-79		
	9AG	white	-79		
	1AJ	black	80-82		
	30B	dark blue	80-82		
	50B	beige	80-		
	30A	blue	80		
	80B	light red	80		
	10A	yellow	80		
	99A	white	80		
	40D	cork	80		
	80S	can-can-red	81-		
	95S	papyrus	81-		
	60S	hannibal grey	81-		
	20S	mint green	81-		
	6AD	doric grey	80		
	2LB	burgundy			M 403
	LG7	burgundy	83-		
	KZ4	grey-beige	83-		
	8YD	pearl white	83-		
	1VD	champagne	83-		
	LG6	dark green	83-		
	KZ2	black	83-		
	KZ3	blue	83-		
	KZ5	brown	83-		
(13)	911 555 757 75	cover lock pillar leather	/L	1	TARGA/CABRIO
	8AH	lobster	-78		
	5AH	cork	-79		

Pos	Part Number	Name	Remarks	Qty	Model
	7AG	black	-79		
	20B	dark green	-80		
	2AP	light green	-78		
	3NG	brown	-82		
	3AG	blue	-79		
	8AT	light red	-79		
	1AG	yellow	-79		
	9AG	white	-79		
	1AJ	black	80-82		
	30B	dark blue	80-82		
	50B	beige	80-		
	30A	blue	80		
	80B	light red	80		
	10A	yellow	80		
	99A	white	80		
	40D	cork	80		
	80S	can-can-red	81-		
	95S	papyrus	81-		
	60S	hannibal grey	81-		
	20S	mint green	81-		
	6AD	doric grey	80		
	2LB	burgundy			M 403
	LG7	burgundy	83-		
	KZ4	grey-beige	83-		
	8YD	pearl white	83-		
	1VD	champagne	83-		
	LG6	dark green	83-		
	KZ2	black	83-		
	KZ3	blue	83-		

Pos	Part Number	Name	Remarks	Qty	Model
	KZ5	brown	83-		
(13)	911 555 758 75	cover lock pillar leather	/R	1	TARGA/CABRIO
	8AH	lobster	-78		
	5AH	cork	-79		
	7AG	black	-79		
	20B	dark green	-80		
	2AP	light green	-78		
	3NG	brown	-82		
	3AG	blue	-79		
	8AT	light red	-79		
	1AG	yellow	-79		
	9AG	white	-79		
	1AJ	black	80-82		
	30B	dark blue	80-82		
	50B	beige	80-		
	30A	blue	80		
	80B	light red	80		
	10A	yellow	80		
	99A	white	80		
	40D	cork	80		
	80S	can-can-red	81-		
	95S	papyrus	81-		
	60S	hannibal grey	81-		
	20S	mint green	81-		
	6AD	doric grey	80		
	2LB	burgundy			M 403
	LG7	burgundy	83-		
	KZ4	grey-beige	83-		

Pos	Part Number	Name	Remarks	Qty	Model
	8YD	pearl white	83-		
	1VD	champagne	83-		
	LG6	dark green	83-		
	KZ2	black	83-		
	KZ3	blue	83-		
	KZ5	brown	83-		
(13)	901 555 023 01	filler piece	/L	1	TARGA
(13)	901 555 024 01	filler piece	/R	1	TARGA
(14)	911 555 091 00	rear covering leatherette	/L	1	COUPE
	8AU	lobster	-78		
	5AU	cork			
	7AU	black	-82		
	4AU	brown	79-82		
	3AU	dark blue	80-82		
	5BC	beige	80-		
	3MK	burgundy	83-		
	05T	black	83-		
	1HH	blue	83-		
	4RB	brown	83-		
14	911 555 092 00	rear covering leatherette	/R	1	COUPE
	8AU	lobster	-78		
	5AU	cork			
	7AU	black	-82		
	4AU	brown	79-82		
	3AU	dark blue	80-82		
	5BC	beige	80-		
	3MK	burgundy	83-		
	05T	black	83-		

Pos	Part Number	Name	Remarks	Qty	Model
	1HH	blue	83-		
	4RB	brown	83-		
(14)	911 555 091 40	rear covering leatherette	/L	1	TARGA
	8AU	lobster	-78		
	5AU	cork			
	7AU	black	-82		
	4AU	brown	79-82		
	3AU	dark blue	80-82		
	5BC	beige	80-		
	3MK	burgundy	83-		
	05T	black	83-		
	1HH	blue	83-		
	4RB	brown	83-		
(14)	911 555 092 40	rear covering leatherette	/R	1	TARGA
	8AU	lobster	-78		
	5AU	cork			
	7AU	black	-82		
	4AU	brown	79-82		
	3AU	dark blue	80-82		
	5BC	beige	80-		
	3MK	burgundy	83-		
	05T	black	83-		
	1HH	blue	83-		
	4RB	brown	83-		
(14)	911 555 091 70	rear covering leather	/L	1	COUPE
	8AH	lobster	-78		
	5AH	cork	-79		
	7AG	black	-79		
	20B	dark green			
	3NG	brown	-82		
	3AG	blue	-79		
	8AT	light red	-79		
	1AJ	black	80-82		
	30B	dark blue	80-82		
	30A	blue	80		
	40D	cork	80		
	60S	hannibal grey	81-		
	20S	mint green	81-		
	6AD	doric grey	80		
	2LB	burgundy			M 403
	LG7	burgundy	83-		
	LG6	dark green	83-		
	KZ2	black	83-		
	KZ3	blue	83-		
	KZ5	brown	83-		
14	911 555 092 70	rear covering leather	/R	1	COUPE
	8AH	lobster	-78		
	5AH	cork	-79		
	7AG	black	-79		
	20B	dark green			
	3NG	brown	-82		
	3AG	blue	-79		
	8AT	light red	-79		
	1AJ	black	80-82		
	30B	dark blue	80-82		
	30A	blue	80		
	40D	cork	80		

Pos	Part Number	Name	Remarks	Qty	Model
	60S	hannibal grey	81-		
	20S	mint green	81-		
	6AD	doric grey	80		
	2LB	burgundy			M 403
	LG7	burgundy	83-		
	LG6	dark green	83-		
	KZ2	black	83-		
	KZ3	blue	83-		
	KZ5	brown	83-		
(14)	911 555 091 75	rear covering leather	/L	1	TARGA
	8AH	lobster	-78		
	5AH	cork	-79		
	7AG	black	-79		
	20B	dark green			
	3NG	brown	-82		
	3AG	blue	-79		
	8AT	light red	-79		
	1AJ	black	80-82		
	30B	dark blue	80-82		
	30A	blue	80		
	40D	cork	80		
	60S	hannibal grey	81-		
	20S	mint green	81-		
	6AD	doric grey	80		
	2LB	burgundy			M 403
	LG7	burgundy	83-		
	LG6	dark green	83-		
	KZ2	black	83-		
	KZ3	blue	83-		
	KZ5	brown	83-		
(14)	911 555 092 75	rear covering leather	/R	1	TARGA
	8AH	lobster	-78		
	5AH	cork	-79		
	7AG	black	-79		
	20B	dark green			
	3NG	brown	-82		
	3AG	blue	-79		
	8AT	light red	-79		
	1AJ	black	80-82		
	30B	dark blue	80-82		
	30A	blue	80		
	40D	cork	80		
	60S	hannibal grey	81-		
	20S	mint green	81-		
	6AD	doric grey	80		
	2LB	burgundy			M 403
	LG7	burgundy	83-		
	LG6	dark green	83-		
	KZ2	black	83-		
	KZ3	blue	83-		
	KZ5	brown	83-		
15	999 591 338 02	speed nut		4	
16	900 145 071 07	tapping screw B 3,5 X 13		6	
17	999 591 116 07	cone washer		6	
(18)	901 552 871 40	cover		2	
19	901 552 872 20	coat hook		2	
20	900 250 007 02	tapping screw AM 5 X 12		2	

Pos	Part Number	Name	Remarks	Qty	Model	Pos	Part Number	Name	Remarks	Qty	Model
		- -- E N D -- -									

Model	Year	MG	SG	Illustration	Restrictions	Update				
911	83	8	07	807-06		203	11:28	18.08.2006	PORSCHE	PET	PORSCHE

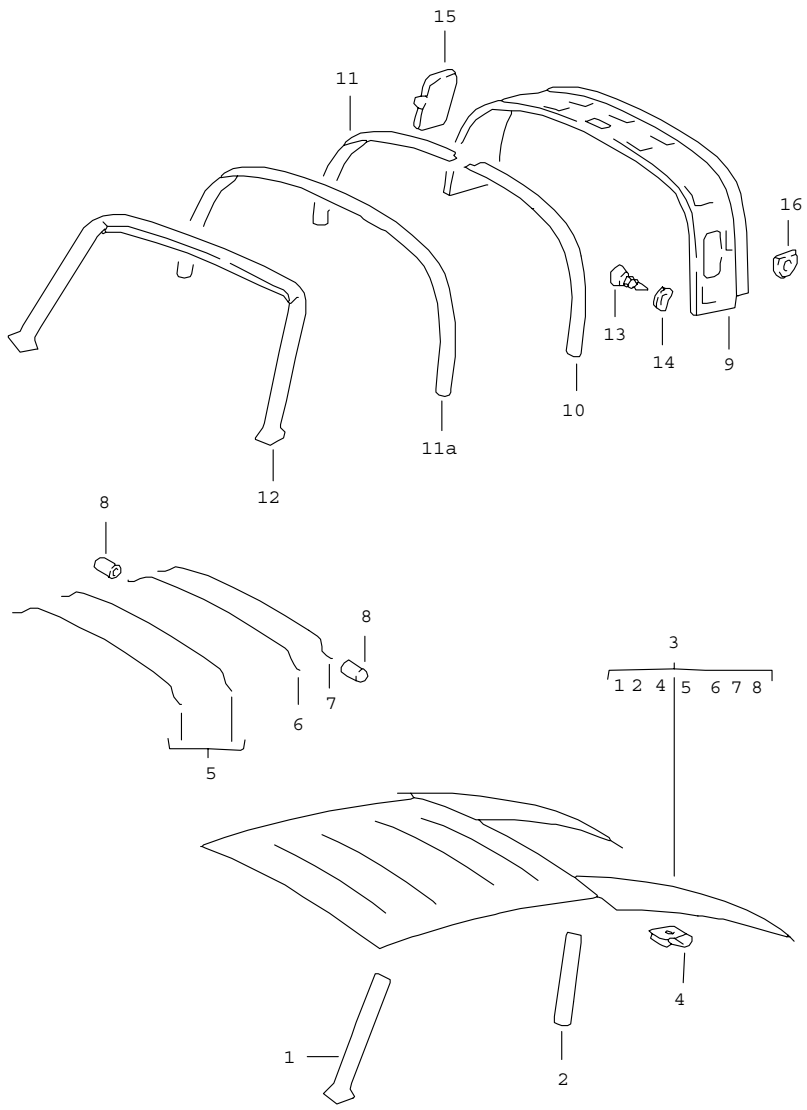

Pos	Part Number	Name	Remarks	Qty	Model
		interior equipment roof			
1	911 555 507 00	lining windscreen frame part	/L	1	COUPE
	702	black			
	4AU	brown	-82		
	30B	dark blue	-82		
	2LB	burgundy			M 403
	1HH	blue	83-		
	3MX	burgundy	83-		
	5FX	grey-beige	83-		
	4RB	brown	83-		
(1)	911 555 508 00	lining windscreen frame part	/R	1	COUPE
	702	black			
	4AU	brown	-82		
	30B	dark blue	-82		
	2LB	burgundy			M 403
	1HH	blue	83-		
	3MX	burgundy	83-		
	5FX	grey-beige	83-		
	4RB	brown	83-		
2	911 555 505 01	lining door pillar	/L	1	COUPE
	702	black			
	4AU	brown	-82		
	30B	dark blue	-82		
	2LB	burgundy			M 403
	1HH	blue	83-		
	3MX	burgundy	83-		
	5FX	grey-beige	83-		

Pos	Part Number	Name	Remarks	Qty	Model
	4RB	brown	83-		
(2)	911 555 506 01	lining door pillar	/R	1	COUPE
	702	black			
	4AU	brown	-82		
	30B	dark blue	-82		
	2LB	burgundy			M 403
	1HH	blue	83-		
	3MX	burgundy	83-		
	5FX	grey-beige	83-		
	4RB	brown	83-		
3	911 555 055 05	roof lining without POS.1-8 for cars without sunroof		1	COUPE
	700	black			
	500	beige			
	3AD	dark blue	-82		
	21S	brown	-82		
	2LB	burgundy			M 403
	8LC	burgundy	83-		
	7FC	grey-beige	83-		
	1HH	blue	83-		
	4RB	brown	83-		
(3)	911 555 055 15	roof lining for cars with sunroof		1	COUPE:M 650
	700	black			
	500	beige			
	3AD	dark blue	-82		
	21S	brown	-82		
	2LB	burgundy			M 403

Pos	Part Number	Name	Remarks	Qty	Model
	8LC	burgundy	83-		
	7FC	grey-beige	83-		
	1HH	blue	83-		
	4RB	brown	83-		
(3)	A 911 555 055 13	roof lining for cars with sunroof brown	-82	1	COUPE:M 650
(3)	A 911 555 055 14	roof lining for cars with sunroof dark blue	-82	1	COUPE:M 650
4	999 591 336 01	clamp	/H	5	COUPE
(4)	999 591 342 02	u-clamp	/V	5	COUPE
5	901 555 511 20	transverse strut 1 + 2		2	COUPE
6	901 555 512 20	transverse strut 3		1	COUPE
7	901 555 513 20	transverse strut 4		1	COUPE
8	644 555 515 00	rubber profile		8	COUPE
9	911 565 019 40	interior lining		1	TARGA
	702	black			
10	911 565 513 40	padding	/L	1	TARGA
11	911 565 514 40	padding	/R	1	TARGA
11A	901 565 511 40	cover padding		1	TARGA
12	901 555 901 40	lining windscreen frame part	/V	1	TARGA/CABRIO
	702	black			
13	900 145 038 07	oval-head sheetmetal screw B 3,5 X 16		4	TARGA
14	999 591 102 17	washer 3,5		4	TARGA
(15)	911 565 157 40	bleeding	/L	1	TARGA
15	911 565 158 40	bleeding	/R	1	TARGA

Pos	Part Number	Name	Remarks	Qty	Model	Pos	Part Number	Name	Remarks	Qty	Model
16	911 565 132 00	filler piece		2	TARGA						
		- -- E N D -- -									

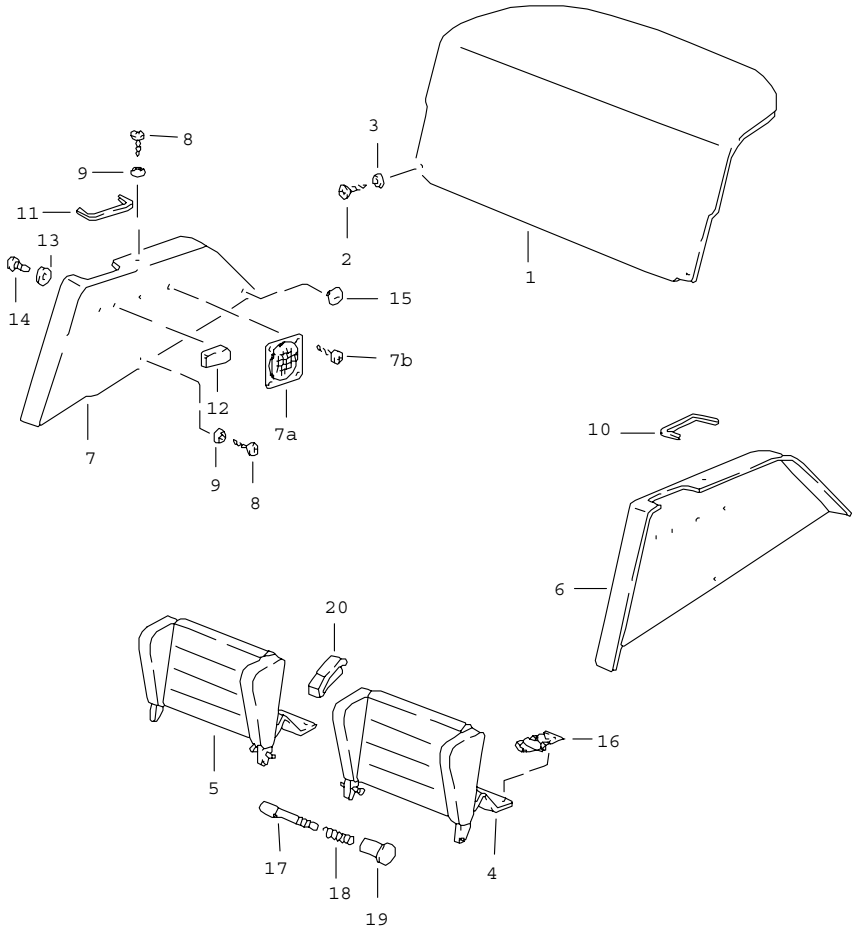

Pos	Part Number	Name	Remarks	Qty	Model
		interior equipment rear			CABRIO
1	911 555 075 60	back wall lining carpet		1	
	70E	black			
	30B	blue			
	40E	brown			
	80E	burgundy			
	60A	grey			
	2FL	grey-beige			
2	900 145 072 07	tapping screw B 3,5 X 22		2	
3	999 591 102 17	washer 3,5		2	
(4)	911 522 017 60	back seat backrest leatherette	/L	1	
	43S	black			
	1HH	blue			
	4RB	brown			
	3MK	burgundy			
	4FK	grey-beige			
(4)	911 522 017 62	back seat backrest leather	/L	1	
	KZ2	black			
	KZ3	blue			
	KZ5	brown			
	LG7	burgundy			
	KZ4	grey-beige			
	KZ6	can-can-red	83-		
	LG4	pearl white	83-		
	LG5	champagne	83-		
	LG6	dark green	83-		

Pos	Part Number	Name	Remarks	Qty	Model
(5)	911 522 018 60	back seat backrest leatherette	/R	1	
	43S	black			
	1HH	blue			
	4RB	brown			
	3MK	burgundy			
	4FK	grey-beige			
(5)	911 522 018 62	back seat backrest leather	/R	1	
	KZ2	black			
	KZ3	blue			
	KZ5	brown			
	LG7	burgundy			
	KZ4	grey-beige			
	KZ6	can-can-red	83-		
	LG4	pearl white	83-		
	LG5	champagne	83-		
	LG6	dark green	83-		
6	911 555 071 60	side trim panel carpet	/L	1	
	70E	black			
	30B	blue			
	40E	brown			
	80E	burgundy			
	2FL	grey-beige			
	6JD	dark green	83-		
	1VD	champagne	83-		
(6)	911 555 071 61	side trim panel with loudspeaker carpet	/L	1	
	70E	black			
	30B	blue			
	40E	brown			
	80E	burgundy			
	2FL	grey-beige			
	6JD	dark green	83-		
	1VD	champagne	83-		
7	911 555 072 60	side trim panel carpet	/R	1	
	70E	black			
	30B	blue			
	40E	brown			
	80E	burgundy			
	2FL	grey-beige			
	6JD	dark green	83-		
	1VD	champagne	83-		
(7)	911 555 072 61	side trim panel with loudspeaker carpet	/R	1	
	70E	black			
	30B	blue			
	40E	brown			
	80E	burgundy			
	2FL	grey-beige			
	6JD	dark green	83-		
	1VD	champagne	83-		
7A	928 645 423 00	loudspeaker grille		2	
7B	900 143 132 07	tapping screw B 3,9 X 16		8	
8	N 014 093 3	tapping screw B 4,2 X 13		4	
9	999 591 116 07	cone washer		4	

Pos	Part Number	Name	Remarks	Qty	Model
10	911 555 417 60	rose	/L	1	
11	911 555 418 60	rose	/R	1	
12	477 857 375 A	support for seatbelt		2	
	01C	black			
	89S	brown			
13	N 011 665 3	washer B 5,3		4	
14	900 146 003 02	oval-head screw M 5 X 10		4	
15	N 900 685 01	push button		2	
16	911 561 493 00	leather loop		2	
17	911 522 229 00	bolt		2	
18	911 522 233 00	spring		2	
19	911 522 231 00	knob		2	
20	911 522 561 60	intermediate piece		1	
		- -- E N D -- -			

Pos	Part Number	Name	Remarks	Qty	Model

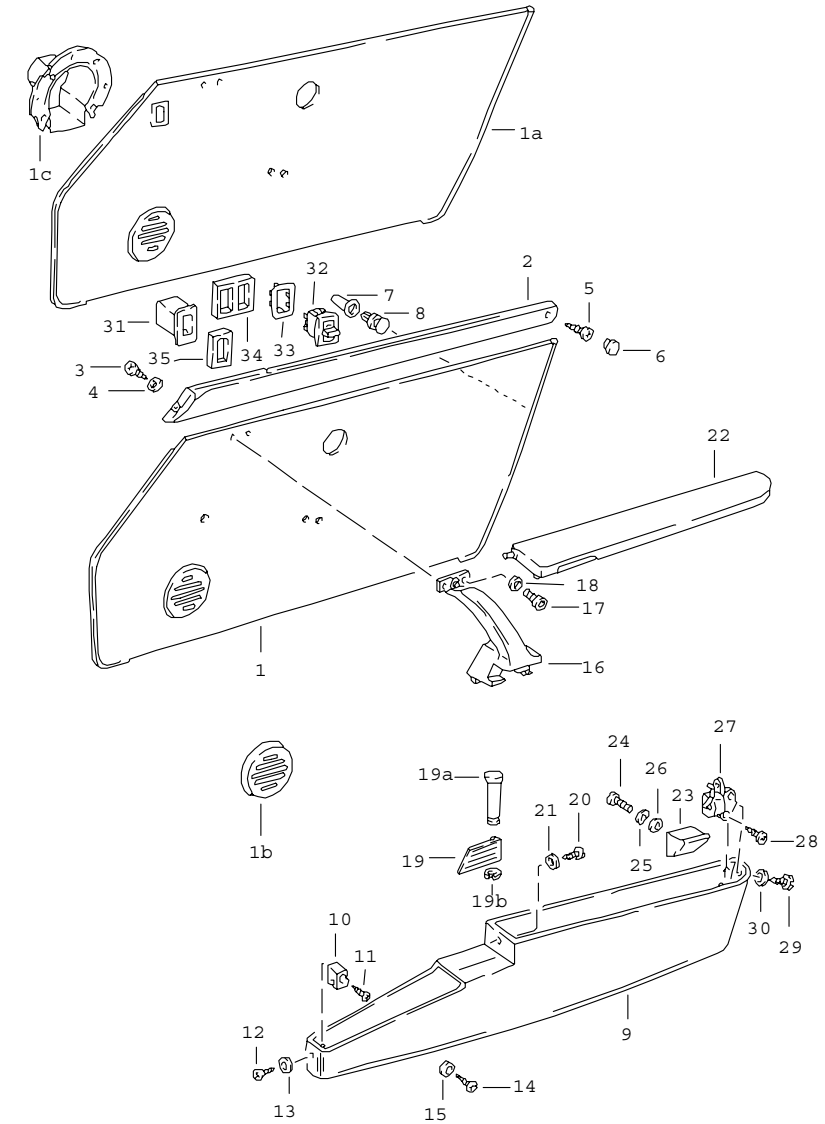

Pos	Part Number	Name	Remarks	Qty	Model
		interior equipment doors			
(1)	911 555 031 28	door trim panel leatherette	/L -79	1	SC
	8AU	lobster	-78		
	5AU	cork			
	7AU	black			
	4AU	brown	79		
1	911 555 032 28	door trim panel leatherette	/R -79	1	SC
	8AU	lobster	-78		
	5AU	cork			
	7AU	black			
	4AU	brown	79		
(1)	911 555 031 31	door trim panel pin stripe velour	/L -78	1	SC
	8AK	lobster			
	5AK	cork			
	7AK	black			
(1)	911 555 032 31	door trim panel pin stripe velour	/R -78	1	SC
	8AK	lobster			
	5AK	cork			
	7AK	black			
(1)	911 555 031 31	door trim panel tartan cloth	/L -78	1	SC
	8AB	red-blue			
	2AC	green-blue			
	4AD	brown-beige			
(1)	911 555 032 31	door trim panel tartan cloth	/R -78	1	SC
	8AB	red-blue			
	2AC	green-blue			

Pos	Part Number	Name	Remarks	Qty	Model
	4AD	brown-beige			
(1)	911 555 031 87	door trim panel leather	/L -79	1	SC
	8AH	lobster	-78		
	5AH	cork			
	7AG	black			
	20B	dark green			
	2AP	light green	-78		
	40A	brown			
	3AG	blue			
	8AT	light red			
	1AG	yellow			
	9AG	white			
1	911 555 032 87	door trim panel leather	/R -79	1	SC
	8AH	lobster	-78		
	5AH	cork			
	7AG	black			
	20B	dark green			
	2AP	light green	-78		
	40A	brown			
	3AG	blue			
	8AT	light red			
	1AG	yellow			
	9AG	white			
(1A)	911 555 031 29	door trim panel leatherette	/LL/L-82	1	SC
	8AU	lobster	-78		
	5AU	cork	-79		
	7AU	black			
	4AU	brown	79-82		
	3AU	dark blue	80-82		
	5BC	beige	80-82		
1A	911 555 032 29	door trim panel leatherette	/LL/R-82	1	SC
	8AU	lobster	-78		
	5AU	cork	-79		
	7AU	black			
	4AU	brown	79-82		
	3AU	dark blue	80-82		
	5BC	beige	80-82		
(1A)	A 911 555 031 34	door trim panel leatherette	/LL/L83-	1	SC
	3MK	burgundy			
	4FK	grey-beige			
	05T	black			
	1HH	blue			
	4RB	brown			
1A	A 911 555 032 34	door trim panel leatherette	/LL/R83-	1	SC
	3MK	burgundy			
	4FK	grey-beige			
	05T	black			
	1HH	blue			
	4RB	brown			
(1A)	911 555 931 40	door trim panel leatherette	/L 83-	1	SC
	3MK	burgundy			
	4FK	grey-beige			
	05T	black			
	1HH	blue			
	4RB	brown			

Pos	Part Number	Name	Remarks	Qty	Model
(1A)	911 555 932 40	door trim panel leatherette	/R 83-	1	SC
	3MK	burgundy			
	4FK	grey-beige			
	05T	black			
	1HH	blue			
	4RB	brown			
(1A)	A 911 555 031 32	door trim panel pin stripe velour	/LL/L78	1	
	8AK	lobster			
	5AK	cork			
	7AK	black			
1A	911 555 032 32	door trim panel pin stripe velour	/LL/R78	1	
	8AK	lobster			
	5AK	cork			
	7AK	black			
(1A)	A 911 555 031 32	door trim panel tartan cloth	/LL/L78	1	
	8AB	red-blue			
	2AC	green-blue			
	4AD	brown-beige			
1A	911 555 032 32	door trim panel tartan cloth	/LL/R78	1	
	8AB	red-blue			
	2AC	green-blue			
	4AD	brown-beige			
(1A)	A 911 555 031 32	door trim panel stripe design	/LL/L78	1	M 403
	9LA	burgundy			
1A	911 555 032 32	door trim panel stripe design	/LL/R78	1	M 403
	9LA	burgundy			
(1A)	930 555 031 72	door trim panel leather	/LL/L-82	1	
	8AH	lobster	-78		
	5AH	cork	-79		
	7AG	black	-79		
	20B	dark green	-79		
	2AP	light green	-78		
	3NG	brown			
	3AG	blue	-79		
	8AT	light red	-79		
	1AG	yellow	-79		
	9AG	white	-79		
	1AJ	black	80-		
	30B	dark blue	80-		
	50B	beige	80-		
	30A	blue	80		
	80B	light red	80		
	10A	yellow	80		
	99A	white	80		
	40D	cork	80		
	80S	can-can-red	81-		
	95S	papyrus	81-		
	60S	hannibal grey	81-		
	20S	mint green	81-		
	6AD	doric grey	80		
1A	930 555 032 72	door trim panel leather	/LL/R-82	1	
	8AH	lobster	-78		
	5AH	cork	-79		
	7AG	black	-79		

Pos	Part Number	Name	Remarks	Qty	Model
	20B	dark green	-79		
	2AP	light green	-78		
	3NG	brown			
	3AG	blue	-79		
	8AT	light red	-79		
	1AG	yellow	-79		
	9AG	white	-79		
	1AJ	black	80-		
	30B	dark blue	80-		
	50B	beige	80-		
	30A	blue	80		
	80B	light red	80		
	10A	yellow	80		
	99A	white	80		
	40D	cork	80		
	80S	can-can-red	81-		
	95S	papyrus	81-		
	60S	hannibal grey	81-		
	20S	mint green	81-		
	6AD	doric grey	80		
(1A)	A 930 555 031 74	door trim panel leather	/LL/L83-	1	
	LG7	burgundy			
	KZ4	grey-beige			
	LG6	dark green			
	KZ2	black			
	KZ3	blue			
	KZ5	brown			
	KZ6	can-can-red			
	LG4	pearl white			
	LG5	champagne			
1A	A 930 555 032 74	door trim panel leather	/LL/R83-	1	
	LG7	burgundy			
	KZ4	grey-beige			
	LG6	dark green			
	KZ2	black			
	KZ3	blue			
	KZ5	brown			
	KZ6	can-can-red			
	LG4	pearl white			
	LG5	champagne			
(1A)	911 555 931 50	door trim panel leather	/L	1	
	LG7	burgundy			
	KZ4	grey-beige			
	LG6	dark green			
	KZ2	black			
	KZ3	blue			
	KZ5	brown			
	KZ6	can-can-red			
	LG4	pearl white			
	LG5	champagne			
(1A)	911 555 932 50	door trim panel leather	/R	1	
	LG7	burgundy			
	KZ4	grey-beige			
	LG6	dark green			
	KZ2	black			
	KZ3	blue			
	KZ5	brown			

Pos	Part Number	Name	Remarks	Qty	Model
	KZ6	can-can-red			
	LG4	pearl white			
	LG5	champagne			
1B	911 555 013 00	cover	-82	2	
(1B)	911 555 013 01	loudspeaker grille	83-	2	
-	999 507 226 01	clamping washer		6	
1C	911 555 217 00	housing	83-	2	
(2)	A 911 555 083 45	cover strip leatherette	/LL/L	1	SC
	8AE	lobster	-78		
	5AE	cork			
	7AE	black			
	21S	brown	-79		
	30B	dark blue	80-		
	3MX	burgundy	83-		
	4RB	brown	83-		
2	A 911 555 084 46	cover strip leatherette	/LL/R	1	SC
	8AE	lobster	-78		
	5AE	cork			
	7AE	black			
	21S	brown	-79		
	30B	dark blue	80-		
	3MX	burgundy	83-		
	4RB	brown	83-		
(2)	911 555 083 47	cover strip leatherette	/LL/L	1	SC
	8AE	lobster	-78		
	5AE	cork			
	7AE	black			
	21S	brown	-79		
	30B	dark blue	80-		
	3MX	burgundy	83-		
	4RB	brown	83-		
2	911 555 084 48	cover strip leatherette	/LL/R	1	SC
	8AE	lobster	-78		
	5AE	cork			
	7AE	black			
	21S	brown	-79		
	30B	dark blue	80-		
	3MX	burgundy	83-		
	4RB	brown	83-		
(2)	A 911 555 083 72	cover strip leather	/LL/L	1	COUPE
	8AH	lobster	-78		
	5AH	cork	-79		
	7AG	black	-79		
	20B	dark green			
	3NG	brown	-82		
	3AG	blue	-79		
	8AT	light red	-79		
	1AJ	black	80-82		
	30B	dark blue	80-82		
	30A	blue	80		
	40D	cork	80		
	60S	hannibal grey	81-		
	20S	mint green	81-		
	6AD	doric grey	80		
	2LB	burgundy			M 403
	LG7	burgundy	83-		

Pos	Part Number	Name	Remarks	Qty	Model
	LG6	dark green	83-		
	KZ2	black	83-		
	KZ3	blue	83-		
	KZ5	brown	83-		
(2)	A 911 555 084 73	cover strip leather	/LL/R	1	COUPE
	8AH	lobster	-78		
	5AH	cork	-79		
	7AG	black	-79		
	20B	dark green			
	3NG	brown	-82		
	3AG	blue	-79		
	8AT	light red	-79		
	1AJ	black	80-82		
	30B	dark blue	80-82		
	30A	blue	80		
	40D	cork	80		
	60S	hannibal grey	81-		
	20S	mint green	81-		
	6AD	doric grey	80		
	2LB	burgundy			M 403
	LG7	burgundy	83-		
	LG6	dark green	83-		
	KZ2	black	83-		
	KZ3	blue	83-		
	KZ5	brown	83-		
(2)	911 555 083 79	cover strip leather	/LL/L	1	
	8AH	lobster	-78		
	5AH	cork	-79		
	7AG	black	-79		
	20B	dark green			
	3NG	brown	-82		
	3AG	blue	-79		
	8AT	light red	-79		
	1AJ	black	80-82		
	30B	dark blue	80-82		
	30A	blue	80		
	40D	cork	80		
	60S	hannibal grey	81-		
	20S	mint green	81-		
	6AD	doric grey	80		
	2LB	burgundy			M 403
	LG7	burgundy	83-		
	LG6	dark green	83-		
	KZ2	black	83-		
	KZ3	blue	83-		
	KZ5	brown	83-		
(2)	911 555 084 80	cover strip leather	/LL/R	1	
	8AH	lobster	-78		
	5AH	cork	-79		
	7AG	black	-79		
	20B	dark green			
	3NG	brown	-82		
	3AG	blue	-79		
	8AT	light red	-79		
	1AJ	black	80-82		
	30B	dark blue	80-82		
	30A	blue	80		

Pos	Part Number	Name	Remarks	Qty	Model
	40D	cork	80		
	60S	hannibal grey	81-		
	20S	mint green	81-		
	6AD	doric grey	80		
	2LB	burgundy			M 403
	LG7	burgundy	83-		
	LG6	dark green	83-		
	KZ2	black	83-		
	KZ3	blue	83-		
	KZ5	brown	83-		
(2)	A 911 555 083 77	cover strip leather	/LL/L	1	TARGA/CABRIO
	8AH	lobster	-78		
	5AH	cork	-79		
	7AG	black	-79		
	20B	dark green	-82		
	3NG	brown	-82		
	3AG	blue	-79		
	8AT	light red	-79		
	1AJ	black	80-82		
	30B	dark blue	80-82		
	30A	blue	80		
	40D	cork	80		
	60S	hannibal grey	81-82		
	20S	mint green	81-82		
	2LB	burgundy			M 403
	LG7	burgundy	83-		
	LG6	dark green	83-		
	KZ2	black	83-		
	KZ3	blue	83-		
	KZ5	brown	83-		
(2)	A 911 555 084 78	cover strip leather	/LL/R	1	TARGA/CABRIO
	8AH	lobster	-78		
	5AH	cork	-79		
	7AG	black	-79		
	20B	dark green	-82		
	3NG	brown	-82		
	3AG	blue	-79		
	8AT	light red	-79		
	1AJ	black	80-82		
	30B	dark blue	80-82		
	30A	blue	80		
	40D	cork	80		
	60S	hannibal grey	81-82		
	20S	mint green	81-82		
	2LB	burgundy			M 403
	LG7	burgundy	83-		
	LG6	dark green	83-		
	KZ2	black	83-		
	KZ3	blue	83-		
	KZ5	brown	83-		
(2)	911 555 083 79	cover strip leather	/LL/L	1	
	8AH	lobster	-78		
	5AH	cork	-79		
	7AG	black	-79		
	20B	dark green	-82		
	3NG	brown	-82		
	3AG	blue	-79		

Pos	Part Number	Name	Remarks	Qty	Model
	8AT	light red	-79		
	1AJ	black	80-82		
	30B	dark blue	80-82		
	30A	blue	80		
	40D	cork	80		
	60S	hannibal grey	81-82		
	20S	mint green	81-82		
	2LB	burgundy			M 403
	LG7	burgundy	83-		
	LG6	dark green	83-		
	KZ2	black	83-		
	KZ3	blue	83-		
	KZ5	brown	83-		
2	911 555 084 80	cover strip leather	/LL/R	1	
	8AH	lobster	-78		
	5AH	cork	-79		
	7AG	black	-79		
	20B	dark green	-82		
	3NG	brown	-82		
	3AG	blue	-79		
	8AT	light red	-79		
	1AJ	black	80-82		
	30B	dark blue	80-82		
	30A	blue	80		
	40D	cork	80		
	60S	hannibal grey	81-82		
	20S	mint green	81-82		
	2LB	burgundy			M 403
	LG7	burgundy	83-		

Pos	Part Number	Name	Remarks	Qty	Model
	LG6	dark green	83-		
	KZ2	black	83-		
	KZ3	blue	83-		
	KZ5	brown	83-		
3	900 145 071 07	tapping screw B 3,5 X 13		2	
4	999 591 116 07	cone washer		2	
5	N 013 958 7	tapping screw B 3,5 X 13		2	
6	914 552 233 10	filler piece		2	
	01C	black			
7	999 591 311 40	bush		6	
8	823 867 299	clip		6	
(9)	A 911 555 037 02	package box velour pile strap leatherette	/L -78	1	SC
	8BC	lobster	-78		
	5BB	cork			
	7BB	black			
9	A 911 555 038 02	package box velour pile strap leatherette	/R -78	1	SC
	8BC	lobster	-78		
	5BB	cork			
	7BB	black			
(9)	911 555 037 04	package box velour pile strap leatherette	/L -78	1	SC
	8BC	lobster	-78		
	5BB	cork			
	7BB	black			

Pos	Part Number	Name	Remarks	Qty	Model
(9)	911 555 038 04	package box velour pile strap leatherette	/R -78	1	SC
	8BC	lobster	-78		
	5BB	cork			
	7BB	black			
(9)	A 911 555 037 02	package box cut pile strap leatherette	/L 79	1	SC
	4AC	brown			
	5AC	cork			
	7AC	black			
9	A 911 555 038 02	package box cut pile strap leatherette	/R 79	1	SC
	4AC	brown			
	5AC	cork			
	7AC	black			
(9)	911 555 037 04	package box cut pile strap leatherette	/L 79	1	SC
	4AC	brown			
	5AC	cork			
	7AC	black			
(9)	911 555 038 04	package box cut pile strap leatherette	/R 79	1	SC
	4AC	brown			
	5AC	cork			
	7AC	black			

Pos	Part Number	Name	Remarks	Qty	Model
(9)	A 911 555 037 02	package box cut pile strap leatherette	/L 80-	1	SC
	70E	black/black			
	40E	brown/brown			
	30B	blue/blue			
	50B	beige			
	80E	burgundy/burgundy	83-		
	2FL	grey-beige/grey-beige	83-		
	60A	light grey/black	83-		
9	A 911 555 038 02	package box cut pile strap leatherette	/R 80-	1	SC
	70E	black/black			
	40E	brown/brown			
	30B	blue/blue			
	50B	beige			
	80E	burgundy/burgundy	83-		
	2FL	grey-beige/grey-beige	83-		
	60A	light grey/black	83-		
(9)	911 555 037 04	package box cut pile strap leatherette	/L 80-	1	SC
	70E	black/black			
	40E	brown/brown			
	30B	blue/blue			
	50B	beige			
	80E	burgundy/burgundy	83-		
	2FL	grey-beige/grey-beige	83-		
	60A	light grey/black	83-		

Pos	Part Number	Name	Remarks	Qty	Model
(9)	911 555 038 04	package box cut pile strap leatherette	/R 80-	1	SC
	70E	black/black			
	40E	brown/brown			
	30B	blue/blue			
	50B	beige			
	80E	burgundy/burgundy	83-		
	2FL	grey-beige/grey-beige	83-		
	60A	light grey/black	83-		
-	911 555 029 01	cover package box velour pile	/L -78	1	
	8BC	lobster			
	5BB	cork			
	7BB	black			
-	911 555 030 01	cover package box velour pile	/R -78	1	
	8BC	lobster			
	5BB	cork			
	7BB	black			
-	911 555 029 01	cover cut pile	/L 79	1	
	4AC	brown			
	5AC	cork			
	7AC	black			
-	911 555 030 01	cover cut pile	/R 79	1	
	4AC	brown			
	5AC	cork			
	7AC	black			

Pos	Part Number	Name	Remarks	Qty	Model
-	911 555 029 01	cover cut pile	/L 80-	1	
	70E	black			
	40E	brown			
	30B	dark blue			
	50B	beige			
	80E	burgundy	83-		
	2FL	grey-beige	83-		
	60A	light grey	83-		
-	911 555 030 01	cover cut pile	/R 80-	1	
	70E	black			
	40E	brown			
	30B	dark blue			
	50B	beige			
	80E	burgundy	83-		
	2FL	grey-beige	83-		
	60A	light grey	83-		
(9)	A 930 555 037 01	package box velour pile strap leather	/L -78	1	
	8BC	lobster			
	5BB	cork			
	7BB	black			
	20B	dark green			
	40A	brown			
	8BB	light red			
	1BA	yellow			
9	A 930 555 038 01	package box velour pile strap leather	/R -78	1	

Pos	Part Number	Name	Remarks	Qty	Model
	8BC	lobster			
	5BB	cork			
	7BB	black			
	20B	dark green			
	40A	brown			
	8BB	light red			
	1BA	yellow			
(9)	930 555 037 03	package box velour pile strap leather	/L -78	1	
	8BC	lobster			
	5BB	cork			
	7BB	black			
	20B	dark green			
	40A	brown			
	8BB	light red			
	1BA	yellow			
(9)	930 555 038 03	package box velour pile strap leather	/R -78	1	
	8BC	lobster			
	5BB	cork			
	7BB	black			
	20B	dark green			
	40A	brown			
	8BB	light red			
	1BA	yellow			
(9)	A 930 555 037 01	package box cut pile strap leather	/L 79	1	
	5AC	cork			
	7AC	black			
	2AC	dark green			
	4AC	brown			
	8AC	light red			
	1AC	yellow			
9	A 930 555 038 01	package box cut pile strap leather	/R 79	1	
	5AC	cork			
	7AC	black			
	2AC	dark green			
	4AC	brown			
	8AC	light red			
	1AC	yellow			
(9)	930 555 037 03	package box cut pile strap leather	/L 79	1	
	5AC	cork			
	7AC	black			
	2AC	dark green			
	4AC	brown			
	8AC	light red			
	1AC	yellow			
(9)	930 555 038 03	package box cut pile strap leather	/R 79	1	
	5AC	cork			
	7AC	black			
	2AC	dark green			
	4AC	brown			
	8AC	light red			

Pos	Part Number	Name	Remarks	Qty	Model
	1AC	yellow			
(9)	A 930 555 037 01	package box cut pile strap leather	/L	1	
	70E	black/black	80-		
	40E	brown/brown	80-		
	30B	blue/blue	80-		
	50B	beige	80-		
	20E	dark green	80		
	41D	cork	80		
	10A	yellow	80		
	80B	red	80		
	20S	mint green	81-		
	8AY	russet	80		
	80E	burgundy/burgundy			
	2FL	grey-beige/grey-beige	83-		
	60A	light grey/black	83-		
	1VD	champagne/champagne	83-		
	6JD	dark green/dark green	83-		
	80S	can-can-red/can-can-red			
9	A 930 555 038 01	package box cut pile strap leather	/R	1	
	70E	black/black	80-		
	40E	brown/brown	80-		
	30B	blue/blue	80-		
	50B	beige	80-		
	20E	dark green	80		
	41D	cork	80		
	10A	yellow	80		
	80B	red	80		
	20S	mint green	81-		
	8AY	russet	80		
	80E	burgundy/burgundy			
	2FL	grey-beige/grey-beige	83-		
	60A	light grey/black	83-		
	1VD	champagne/champagne	83-		
	6JD	dark green/dark green	83-		
	80S	can-can-red/can-can-red			
(9)	930 555 037 03	package box cut pile strap leather	/L	1	
	70E	black/black	80-		
	40E	brown/brown	80-		
	30B	blue/blue	80-		
	50B	beige	80-		
	20E	dark green	80		
	41D	cork	80		
	10A	yellow	80		
	80B	red	80		
	20S	mint green	81-		
	8AY	russet	80		
	80E	burgundy/burgundy			
	2FL	grey-beige/grey-beige	83-		
	60A	light grey/black	83-		
	1VD	champagne/champagne	83-		
	6JD	dark green/dark green	83-		
	80S	can-can-red/can-can-red			

Pos	Part Number	Name	Remarks	Qty	Model
(9)	930 555 038 03	package box cut pile strap leather	/R	1	
	70E	black/black	80-		
	40E	brown/brown	80-		
	30B	blue/blue	80-		
	50B	beige	80-		
	20E	dark green	80		
	41D	cork	80		
	10A	yellow	80		
	80B	red	80		
	20S	mint green	81-		
	8AY	russet	80		
	80E	burgundy/burgundy			
	2FL	grey-beige/grey-beige	83-		
	60A	light grey/black	83-		
	1VD	champagne/champagne	83-		
	6JD	dark green/dark green	83-		
	80S	can-can-red/can-can-red			
-	930 555 039 00	cover velour pile strap leather	/L -78	1	
	8BC	lobster			
	5BB	cork			
	7BB	black			
	20B	dark green			
	40A	brown			
	8BB	light red			
	1BA	yellow			
-	930 555 040 00	cover velour pile strap leather	/R -78	1	
	8BC	lobster			
	5BB	cork			
	7BB	black			
	20B	dark green			
	40A	brown			
	8BB	light red			
	1BA	yellow			
-	930 555 039 00	cover cut pile strap leather	/L 79	1	
	5AC	cork			
	7AC	black			
	2AC	dark green			
	4AC	brown			
	8AC	light red			
	1AC	yellow			
-	930 555 040 00	cover cut pile strap leather	/R 79	1	
	5AC	cork			
	7AC	black			
	2AC	dark green			
	4AC	brown			
	8AC	light red			
	1AC	yellow			
-	930 555 039 00	cover cut pile strap leather	/L	1	

Pos	Part Number	Name	Remarks	Qty	Model
	70E	black	80-		
	40E	brown	80-		
	30B	dark blue	80-		
	50B	beige	80-		
	20E	dark green	80		
	41D	cork	80		
	10A	yellow	80		
	80B	red	80		
	20S	mint green	81-		
	8AY	russet	80		
	80E	burgundy			
	2FL	grey-beige	83-		
	60A	light grey	83-		
	1VD	champagne	83-		
	6JD	dark green	83-		
	80S	can-can-red			
-	930 555 040 00	cover cut pile strap leather	/R	1	
	70E	black	80-		
	40E	brown	80-		
	30B	dark blue	80-		
	50B	beige	80-		
	20E	dark green	80		
	41D	cork	80		
	10A	yellow	80		
	80B	red	80		
	20S	mint green	81-		
	8AY	russet	80		
	80E	burgundy			

Pos	Part Number	Name	Remarks	Qty	Model
	2FL	grey-beige	83-		
	60A	light grey	83-		
	1VD	champagne	83-		
	6JD	dark green	83-		
	80S	can-can-red			
10	911 555 391 00	mounting		2	
11	900 143 046 07	tapping screw B 4,8 X 16		2	
12	900 145 079 07	tapping screw B 4,8 X 19		2	
13	999 704 605 07	cone washer		2	
14	900 269 058 07	countersunk-head screw M 4 X 25		6	
15	999 591 103 17	protection washer		6	
(16)	911 555 097 01	handle	/L	1	
	041	black			
(16)	911 555 098 01	handle	/R	1	
	041	black			
17	N 014 761 2	pan-head screw M 6 X 12		4	
18	N 012 226 5	spring washer B 6		4	
(19)	911 531 251 00	door opener	/L	1	
	70B	black			
(19)	911 531 252 00	door opener	/R	1	
	70B	black			
19A	911 555 583 00	bolt		2	
19B	900 116 002 01	lock washer		2	
20	900 145 075 07	tapping screw B 4,2 X 16		2	
21	999 591 102 17	washer	-78	2	
(22)	911 555 039 03	cover	/L	1	

Pos	Part Number	Name	Remarks	Qty	Model
	041	black lacquered			
22	911 555 040 03	cover	/R	1	
	041	black lacquered			
23	914 555 059 10	support		2	
24	900 146 011 02	oval-head screw AM 4 X 10		2	
25	N 012 224 3	spring washer B 4		2	
26	900 151 028 02	washer B 4,3		2	
(27)	911 555 045 03	bearing	/L	1	
27	911 555 046 03	bearing	/R	1	
28	900 143 046 07	tapping screw B 4,8 X 16		4	
29	900 145 079 07	tapping screw B 4,8 X 19		2	
30	999 704 605 07	cone washer		2	
31	911 613 623 01	grommet		3	
32	911 613 621 03	switch		3	
33	911 613 635 20	wiper frame		3	
34	911 613 637 00	seal	/L -80	3	
35	911 613 638 00	seal	/R -80	1	
		- -- E N D -- -			

Pos	Part Number	Name	Remarks	Qty	Model

Model	Year	MG	SG	Illustration	Restrictions	Update	11:29	18.08.2006	PORSCHE PET PORSCHE
911	83	8	07	807-15		203			

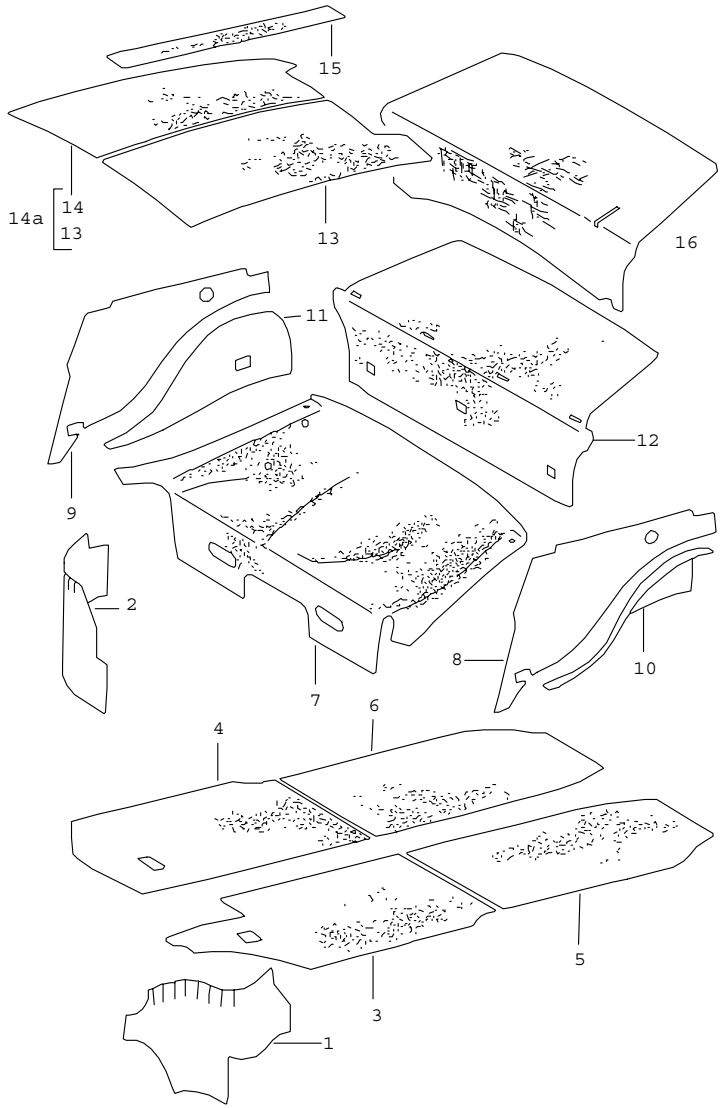

Pos	Part Number	Name	Remarks	Qty	Model
		body sound proofing 1			
(1)	911 556 902 00	damping mat	/L	1	TARGA/CABRIO
1	911 556 902 00	damping mat	/L	1	COUPE
(2)	911 556 902 00	damping mat	/R	1	COUPE
2	911 556 902 00	damping mat wheel housing	/R	1	TARGA/CABRIO
3	911 556 902 00	damping mat	/LL/L	1	COUPE
(3)	911 556 902 00	damping mat	/LL/L	1	TARGA/CABRIO
4	911 556 902 00	damping mat	/LL/R	1	COUPE
(4)	911 556 902 00	damping mat	/LL/R	1	TARGA/CABRIO
5	911 556 902 00	damping mat floor	/L	1	
6	911 556 902 00	damping mat floor	/R	1	
(7)	930 556 233 02	damping mat seat well		1	
8	999 913 006 00	sound absorber	/L	1	COUPE
(8)	999 913 006 00	sound absorber wheel housing panel upper	/L	1	TARGA/CABRIO
9	999 913 006 00	sound absorber	/R	1	COUPE
(9)	999 913 006 00	sound absorber wheel housing panel upper	/R	1	TARGA/CABRIO
10	999 913 006 00	sound absorber	/L	1	COUPE
(10)	999 913 006 00	sound absorber wheel housing panel lower	/L	1	TARGA/CABRIO
11	999 913 006 00	sound absorber	/R	1	COUPE
(11)	999 913 006 00	sound absorber wheel housing panel lower	/R	1	TARGA/CABRIO
12	911 556 239 06	damping mat		1	COUPE/TARGA
(12)	911 556 239 61	damping mat for rear panel		1	CABRIO

Model	Year	MG	SG	Illustration	Restrictions	Update			
911	83	8	07	807-15		203	11:29	18.08.2006	PORSCHE PET PORSCHE

Pos	Part Number	Name	Remarks	Qty	Model	Pos	Part Number	Name	Remarks	Qty	Model
14A	911 556 023 01	damping mat		1	COUPE						
15	911 556 248 00	damping strip		4	COUPE						
16	911 556 891 01	damping mat		1	SC						
(16)	930 556 891 02	damping mat pour engine compartment		1	TURBO						
-	999 913 006 00	sound absorber		X							
		- -- E N D -- -									

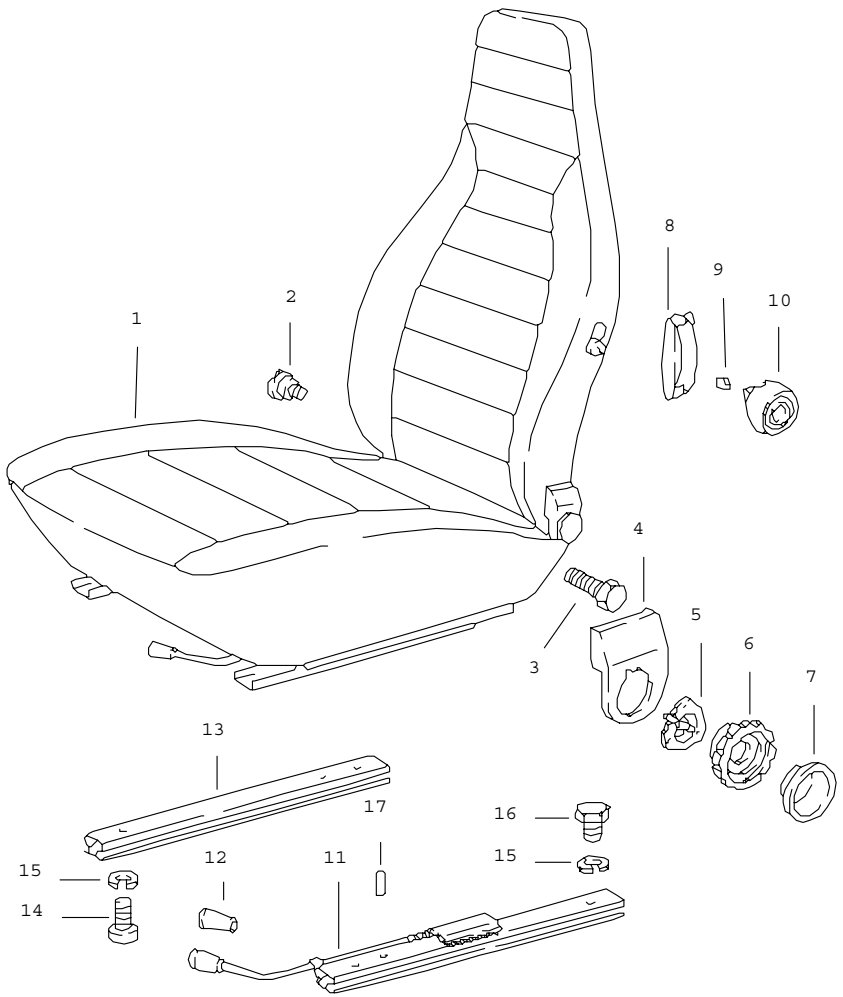

Pos	Part Number	Name	Remarks	Qty	Model
		front seat complete			
1	A 911 521 001 81	front seat leatherette/ centre part braided texture	/L -80	1	SC
	8AT	lobster	-78		SC
	5AT	cork			SC
	7AT	black			
	4AT	brown	79-		
(1)	A 911 521 002 81	front seat leatherette/ centre part braided texture	/R -80	1	SC
	8AT	lobster	-78		SC
	5AT	cork			SC
	7AT	black			
	4AT	brown	79-		
1	A 911 521 001 82	front seat leatherette/ centre part pin stripe velour	/L	1	SC
	8AK	lobster/lobster	-78		
	5AK	cork/cork			
	7AK	black/black			
	8ZT	black/lobster			
	5ZT	black/cork			
	5ZQ	brown/cork	79-		
(1)	A 911 521 002 82	front seat leatherette/ centre part pin stripe velour	/R	1	SC
	8AK	lobster/lobster	-78		
	5AK	cork/cork			
	7AK	black/black			
	8ZT	black/lobster			

Pos	Part Number	Name	Remarks	Qty	Model
	5ZT	black/cork			
	5ZQ	brown/cork	79-		
1	A 911 521 001 82	front seat leatherette/ centre part tartan cloth	/L	1	SC
	8ZU	lobster/brown white/beige	-78		
	5ZU	cork/brown white/beige			
	8ZZ	black-red blue/black			
	2ZZ	black/green blue/black			
	4ZZ	black/brown white/beige			
	4ZS	brown/brown white/beige	79-		
	8ZE	dark blue/ red/blue/black			
	2ZE	dark blue/ green/blue/black			
	4ZH	beige/ brown/white/beige			
(1)	A 911 521 002 82	front seat leatherette/ centre part tartan cloth	/R	1	SC
	8ZU	lobster/brown white/beige	-78		
	5ZU	cork/brown white/beige			
	8ZZ	black-red blue/black			
	2ZZ	black/green blue/black			
	4ZZ	black/brown white/beige			
	4ZS	brown/brown white/beige	79-		
	8ZE	dark blue/ red/blue/black			
	2ZE	dark blue/ green/blue/black			
	4ZH	beige/ brown/white/beige			
1	A 911 521 001 82	front seat leatherette/ centre part checker board velour	/L 80-	1	SC
	3ZP	black/ blue/black			
	4ZP	black/ brown/black			
	FD8	black/ grey/black			
	4ZM	brown/ brown/black			
	FD9	brown/ beige/brown			
	BC1	dark blue/ blue/black			
	4ZG	beige/ brown/black			
	BC4	beige/ beige/brown			
	LD5	black/ light grey-black	83-		
	LJ8	blue/ blue-grey	83-		
	LD6	brown/ brown-grey	83-		
	LJ9	burgundy/ burgundy-grey	83-		
	LK1	grey-beige/ light grey-black	83-		
(1)	A 911 521 002 82	front seat leatherette/ centre part checker board velour	/R 80-	1	SC

Pos	Part Number	Name	Remarks	Qty	Model
	3ZP	black/ blue/black			
	4ZP	black/ brown/black			
	FD8	black/ grey/black			
	4ZM	brown/ brown/black			
	FD9	brown/ beige/brown			
	BC1	dark blue/ blue/black			
	4ZG	beige/ brown/black			
	BC4	beige/ beige/brown			
	LD5	black/ light grey-black	83-		
	LJ8	blue/ blue-grey	83-		
	LD6	brown/ brown-grey	83-		
	LJ9	burgundy/ burgundy-grey	83-		
	LK1	grey-beige/ light grey-black	83-		
1	A 911 521 001 82	front seat leatherette/ centre part uni-coloured cloth	/L 80-	1	SC
	BD4	black/black	-82		
	4ZK	brown/brown	-82		
	BD1	dark blue/blue	-82		
	BD3	beige/beige			
	BD5	brown/beige			
	LK3	brown-brown	83-		
	LK5	burgundy-burgundy	83-		
	LK6	grey-beige/grey-beige	83-		
	JM2	black-black	83-		
	JM5	blue/blue	83-		
(1)	A 911 521 002 82	front seat leatherette/ centre part uni-coloured cloth	/R 80-	1	SC
	BD4	black/black	-82		
	4ZK	brown/brown	-82		
	BD1	dark blue/blue	-82		
	BD3	beige/beige			
	BD5	brown/beige			
	LK3	brown-brown	83-		
	LK5	burgundy-burgundy	83-		
	LK6	grey-beige/grey-beige	83-		
	JM2	black-black	83-		
	JM5	blue/blue	83-		
1	A 911 521 001 83	front seat leatherette/ seat and backrest surface tartan cloth	/L	1	SC
	8ZU	lobster/brown white/beige	-78		
	5ZU	cork/brown white/beige			
	8ZZ	black-red blue/black			
	2ZZ	black/green blue/black			
	4ZZ	black/brown white/beige			
(1)	A 911 521 002 83	front seat leatherette/ seat and backrest surface tartan cloth	/R	1	SC
	8ZU	lobster/brown white/beige	-78		

Pos	Part Number	Name	Remarks	Qty	Model
	5ZU	cork/brown white/beige			
	8ZZ	black-red blue/black			
	2ZZ	black/green blue/black			
	4ZZ	black/brown white/beige			
1	A 911 521 001 83	front seat leatherette/ seat and backrest surface berber cloth	/L 81-	1	SC
	GE9	black/ grey/black	-82		
	BD7	dark blue/ blue/black	-82		
	FE3	brown/ beige/brown	-82		
	BD9	beige/ beige/brown			
	LK8	burgundy/ burgundy-grey	83-		
	JM9	grey-beige/ grey-beige-grey	83-		
	JM3	black/ grey/black	83-		
	JM8	blue/ blue/black	83-		
	JM4	brown/ beige/brown	83-		
(1)	A 911 521 002 83	front seat leatherette/ seat and backrest surface berber cloth	/R 81-	1	SC
	GE9	black/ grey/black	-82		
	BD7	dark blue/ blue/black	-82		
	FE3	brown/ beige/brown	-82		
	BD9	beige/ beige/brown			
	LK8	burgundy/ burgundy-grey	83-		
	JM9	grey-beige/ grey-beige-grey	83-		
	JM3	black/ grey/black	83-		
	JM8	blue/ blue/black	83-		
	JM4	brown/ beige/brown	83-		
1	A 911 521 001 84	front seat leather	/L	1	
	8BB	lobster	-78		
	5BB	cork	-79		
	7BA	black	-79		
	20B	dark green	-82		
	2BF	light green	-78		
	40A	brown	-81		
	3BA	blue	-79		
	8BM	light red	-79		
	1BA	yellow	-79		
	9BA	white	-79		
	70A	black	80-81		
	30B	dark blue	80-82		
	50B	beige	80-		
	40D	cork	80		
	30A	blue	80		
	80B	light red	80		
	10A	yellow	80		
	99A	white	80		
	80S	can-can-red	81-82		

Pos	Part Number	Name	Remarks	Qty	Model
	95S	papyrus	81-		
	60S	hannibal grey	81-		
	20S	mint green	81-		
	1AJ	black	82		
	3NG	brown	82		
	LG7	burgundy	83-		
	LG4	pearl white	83-		
	LG5	champagne	83-		
	LG6	dark green	83-		
	KZ2	black	83-		
	KZ3	blue	83-		
	KZ4	grey-beige	83-		
	KZ5	brown	83-		
	KZ6	can-can-red	83-		
(1)	A 911 521 002 84	front seat leather	/R	1	
	8BB	lobster	-78		
	5BB	cork	-79		
	7BA	black	-79		
	20B	dark green	-82		
	2BF	light green	-78		
	40A	brown	-81		
	3BA	blue	-79		
	8BM	light red	-79		
	1BA	yellow	-79		
	9BA	white	-79		
	70A	black	80-81		
	30B	dark blue	80-82		
	50B	beige	80-		
	40D	cork	80		
	30A	blue	80		
	80B	light red	80		
	10A	yellow	80		
	99A	white	80		
	80S	can-can-red	81-82		
	95S	papyrus	81-		
	60S	hannibal grey	81-		
	20S	mint green	81-		
	1AJ	black	82		
	3NG	brown	82		
	LG7	burgundy	83-		
	LG4	pearl white	83-		
	LG5	champagne	83-		
	LG6	dark green	83-		
	KZ2	black	83-		
	KZ3	blue	83-		
	KZ4	grey-beige	83-		
	KZ5	brown	83-		
	KZ6	can-can-red	83-		
1	A 911 521 001 85	front seat leather/ centre part pin stripe velour	/L	1	
	8AK	lobster/lobster	-78		
	5AK	cork/cork			
	7AK	black/black			
	8ZT	black/lobster			
	5ZT	black/cork			
	5ZR	brown/cork	79-		

Pos	Part Number	Name	Remarks	Qty	Model
(1)	A 911 521 002 85	front seat leather/ centre part pin stripe velour	/R	1	
	8AK	lobster/lobster	-78		
	5AK	cork/cork			
	7AK	black/black			
	8ZT	black/lobster			
	5ZT	black/cork			
	5ZR	brown/cork	79-		
1	A 911 521 001 85	front seat leather/ centre part tartan cloth	/L	1	
	8ZU	lobster/brown white/beige	-78		
	5ZU	cork/brown white/beige			
	8ZZ	black-red blue/black			
	2ZZ	black/green blue/black			
	4ZZ	black/brown white/beige			
	4ZS	brown/brown white/beige	79-		
	8ZE	dark blue/ red/blue/black			
	2ZE	dark blue green/blue/black			
	4ZH	beige/ brown/white/beige			
(1)	A 911 521 002 85	front seat leather/ centre part tartan cloth	/R	1	
	8ZU	lobster/brown white/beige	-78		
	5ZU	cork/brown white/beige			
	8ZZ	black-red blue/black			
	2ZZ	black/green blue/black			
	4ZZ	black/brown white/beige			
	4ZS	brown/brown white/beige	79-		
	8ZE	dark blue/ red/blue/black			
	2ZE	dark blue green/blue/black			
	4ZH	beige/ brown/white/beige			
1	A 911 521 001 85	front seat leather/ centre part checker board velour	/L	1	
	3ZP	black/ blue/black			
	4ZP	black/ brown/black			
	AJ2	black/ grey/black			
	4ZM	brown/ brown/black			
	AJ3	brown/ beige/brown			
	AJ1	dark blue/ blue/black			
	4ZG	beige/ brown/black			
	AJ4	beige/ beige/brown			
	LH1	black/ light grey-black	83-		
	LH3	blue/ blue-grey	83-		

Pos	Part Number	Name	Remarks	Qty	Model
	LH2	brown/ brown-grey	83-		
	LH4	burgundy/ burgundy-grey	83-		
	LH6	grey-beige/ light grey-black	83-		
(1)	A 911 521 002 85	front seat leather/ centre part checker board velour	/R	1	
	3ZP	black/ blue/black			
	4ZP	black/ brown/black			
	AJ2	black/ grey/black			
	4ZM	brown/ brown/black			
	AJ3	brown/ beige/brown			
	AJ1	dark blue/ blue/black			
	4ZG	beige/ brown/black			
	AJ4	beige/ beige/brown			
	LH1	black/ light grey-black	83-		
	LH3	blue/ blue-grey	83-		
	LH2	brown/ brown-grey	83-		
	LH4	burgundy/ burgundy-grey	83-		
	LH6	grey-beige/ light grey-black	83-		
1	A 911 521 001 85	front seat leather/ centre part uni-coloured cloth	/L	1	
	AK4	black/black	-82		
	4ZK	brown/brown			
	AK1	dark blue/blue	-82		
	AK3	beige/beige			
	AK5	brown/beige			
	LJ1	brown-brown	83-		
	LJ2	burgundy-burgundy	83-		
	LJ3	grey-beige/grey-beige	83-		
	JN6	black-black	83-		
	JT4	blue/blue	83-		
(1)	A 911 521 002 85	front seat leather/ centre part uni-coloured cloth	/R	1	
	AK4	black/black	-82		
	4ZK	brown/brown			
	AK1	dark blue/blue	-82		
	AK3	beige/beige			
	AK5	brown/beige			
	LJ1	brown-brown	83-		
	LJ2	burgundy-burgundy	83-		
	LJ3	grey-beige/grey-beige	83-		
	JN6	black-black	83-		
	JT4	blue/blue	83-		
1	A 911 521 001 85	front seat leather/ centre part stripe design	/L	1	
	HS6	burgundy/ grey-burgundy			M 403
(1)	A 911 521 002 85	front seat leather/ centre part stripe design	/R	1	

Pos	Part Number	Name	Remarks	Qty	Model
	HS6	burgundy/ grey-burgundy			M 403
1	A 930 521 001 61	front seat leather/ centre part tartan cloth	/L -78	1	
	8ZU	lobster/brown white/beige			
	5ZU	cork/brown white/beige			
	8ZZ	black-red blue/black			
	2ZZ	black/green blue/black			
	4ZZ	black/brown white/beige			
(1)	A 930 521 002 61	front seat leather/ centre part tartan cloth	/R -78	1	
	8ZU	lobster/brown white/beige			
	5ZU	cork/brown white/beige			
	8ZZ	black-red blue/black			
	2ZZ	black/green blue/black			
	4ZZ	black/brown white/beige			
1	A 930 521 001 20	front seat leather/ seat and backrest surface tartan cloth	/L	1	
	8ZU	lobster/brown white/beige	-78		
	5ZU	cork/brown white/beige			
	8ZZ	black-red blue/black			
	2ZZ	black/green blue/black			
	4ZZ	black/brown white/beige			
1	A 930 521 002 20	front seat leather/ seat and backrest surface tartan cloth	/R	1	
	8ZU	lobster/brown white/beige	-78		
	5ZU	cork/brown white/beige			
	8ZZ	black-red blue/black			
	2ZZ	black/green blue/black			
	4ZZ	black/brown white/beige			
1	A 930 521 001 20	front seat leather/ seat and backrest surface berber cloth	/L	1	
	AK6	black/ grey/black	-82		
	AK7	dark blue/ blue/black	-82		
	AK8	brown/ beige/brown	-82		
	AK9	beige/ beige/brown			
	LH8	burgundy/ burgundy-grey	83-		
	LH9	grey-beige/ grey-beige-grey	83-		
	JH1	black/ grey/black	83-		
	JD4	blue/ blue/black	83-		
	JH2	brown/ beige/brown	83-		

Pos	Part Number	Name	Remarks	Qty	Model
1	A 930 521 002 20	front seat leather/ seat and backrest surface berber cloth	/R	1	
	AK6	black/ grey/black	-82		
	AK7	dark blue/ blue/black	-82		
	AK8	brown/ beige/brown	-82		
	AK9	beige/ beige/brown			
	LH8	burgundy/ burgundy-grey	83-		
	LH9	grey-beige/ grey-beige-grey	83-		
	JH1	black/ grey/black	83-		
	JD4	blue/ blue/black	83-		
	JH2	brown/ beige/brown	83-		
2	911 521 371 00	screw inner		2	
3	911 521 547 00	hexagon-head bolt M 10 X 20		4	
4	911 521 359 02	cover	/L	1	
(4)	911 521 360 02	cover	/R	1	
5	911 521 571 00	tensioning spring		2	
6	911 521 381 00	shifting wheel		2	
7	911 521 383 00	cover		2	
8	311 881 607 A	rose actuating lever		2	
9	311 881 247	clamp		2	
10	113 881 633 E	control button		2	
	01C	satin black			
11	A 928 521 489 02	seat rail with locking device	/L	1	
(11)	A 928 521 490 02	seat rail with locking device	/R	1	
12	911 521 533 01	handle f.longitudinal adjustment		2	
	01C	satin black			
13	944 521 491 00	seat rail without locking device see tpi GR.8 NR.34		2	
14	N 014 761 2	pan-head screw M 6 X 12		8	
15	N 012 006 4	lock ring B 6		16	
16	900 075 057 02	hexagon-head bolt M 6 X 16		8	
17	900 012 123 00	pin A 2,5 X 12		2	

- -- E N D -- -

Model	Year	MG	SG	Illustration	Restrictions	Update	11:29	18.08.2006	PORSCHE PET PORSCHE
911	83	8	08	808-05		203			

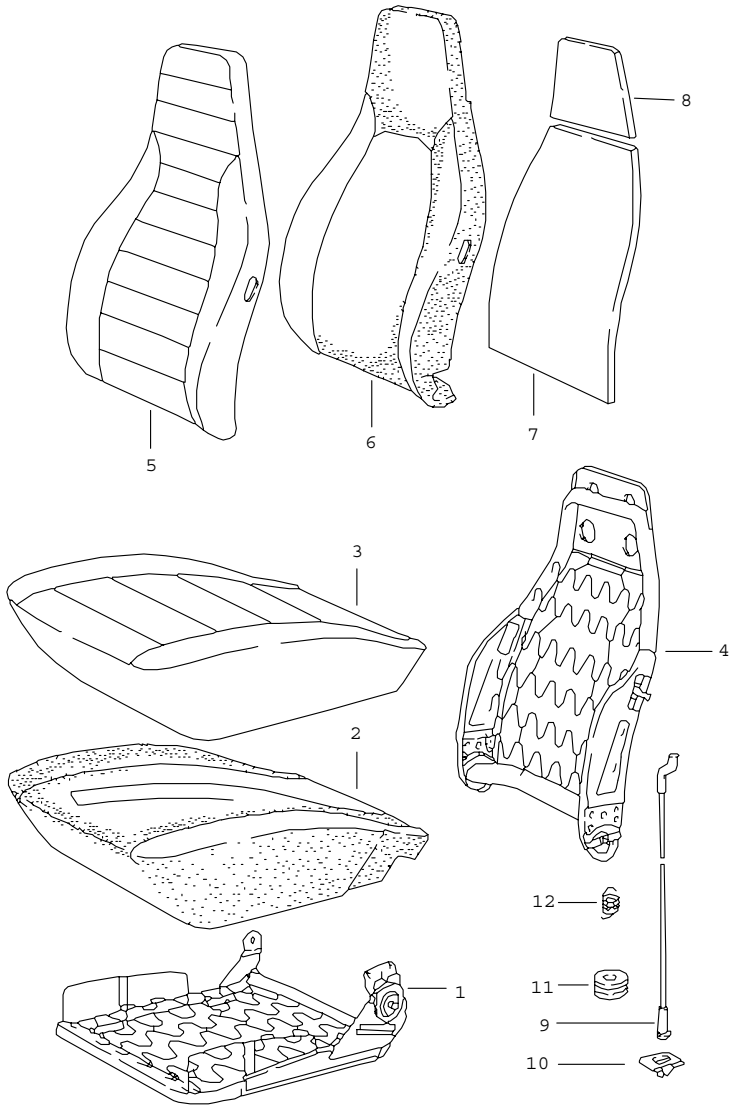

Pos	Part Number	Name	Remarks	Qty	Model
		front seat single parts			
1	911 521 069 56	seat frame	/L	1	
(1)	911 521 070 56	seat frame	/R	1	
2	911 521 385 02	foam part seat cushion	/L	1	
(2)	911 521 386 02	foam part seat cushion	/R	1	
3	A 911 521 037 10	cover for cushion leatherette/ centre part braided texture	/L -80	1	SC
	8AT	lobster	-78		
	5AT	cork			
	7AT	black			
	4AT	brown	79-		
(3)	A 911 521 038 10	cover for cushion leatherette/ centre part braided texture	/R -80	1	SC
	8AT	lobster	-78		
	5AT	cork			
	7AT	black			
	4AT	brown	79-		
3	A 911 521 037 11	cover for cushion leatherette/ centre part pin stripe velour	/L	1	SC
	8AK	lobster/lobster	-78		
	5AK	cork/cork			
	7AK	black/black			
	8ZT	black/lobster			
	5ZT	black/cork			
	5ZQ	brown/cork	79-		

Pos	Part Number	Name	Remarks	Qty	Model
(3)	A 911 521 038 11	cover for cushion leatherette/ centre part pin stripe velour	/R	1	SC
	8AK	lobster/lobster	-78		
	5AK	cork/cork			
	7AK	black/black			
	8ZT	black/lobster			
	5ZT	black/cork			
	5ZQ	brown/cork	79-		
3	A 911 521 037 11	cover for cushion leatherette/ centre part tartan cloth	/L	1	SC
	8ZU	lobster/brown white/beige	-78		
	5ZU	cork/brown white/beige			
	8ZZ	black-red blue/black			
	2ZZ	black/green blue/black			
	4ZZ	black/brown white/beige			
	4ZS	brown/brown white/beige	79-		
	8ZE	dark blue/ red/blue/black			
	2ZE	dark blue/ green/blue/black			
	4ZH	beige/ brown/white/beige			
(3)	A 911 521 038 11	cover for cushion leatherette/ centre part tartan cloth	/R	1	SC
	8ZU	lobster/brown white/beige	-78		
	5ZU	cork/brown white/beige			
	8ZZ	black-red blue/black			
	2ZZ	black/green blue/black			
	4ZZ	black/brown white/beige			
	4ZS	brown/brown white/beige	79-		
	8ZE	dark blue/ red/blue/black			
	2ZE	dark blue/ green/blue/black			
	4ZH	beige/ brown/white/beige			
3	A 911 521 037 11	cover for cushion leatherette/ centre part checker board velour	/L 80-	1	SC
	3ZP	black/ blue/black			
	4ZP	black/ brown/black			
	FD8	black/ grey/black			
	4ZM	brown/ brown/black			
	FD9	brown/ beige/brown			
	BC1	blue/ blue/black			
	4ZG	beige/ brown/black			
	BC4	beige/ beige/brown			
	LD5	black/ light grey-black	83-		
	LJ8	blue/ blue-grey	83-		

Pos	Part Number	Name	Remarks	Qty	Model
	LD6	brown/ brown-grey	83-		
	LJ9	burgundy/ burgundy-grey	83-		
	LK1	grey-beige/ light grey-black	83-		
(3)	A 911 521 038 11	cover for cushion leatherette/ centre part checker board velour	/R 80-	1	SC
	3ZP	black/ blue/black			
	4ZP	black/ brown/black			
	FD8	black/ grey/black			
	4ZM	brown/ brown/black			
	FD9	brown/ beige/brown			
	BC1	blue/ blue/black			
	4ZG	beige/ brown/black			
	BC4	beige/ beige/brown			
	LD5	black/ light grey-black	83-		
	LJ8	blue/ blue-grey	83-		
	LD6	brown/ brown-grey	83-		
	LJ9	burgundy/ burgundy-grey	83-		
	LK1	grey-beige/ light grey-black	83-		
3	A 911 521 037 11	cover for cushion leatherette/ centre part uni-coloured cloth	/L	1	SC
	BD4	black/black	-82		
	4ZK	brown/brown	-82		
	BD1	blue/blue			
	BD3	beige/beige			
	BD5	brown/beige			
	LK3	brown-brown	83-		
	LK5	burgundy-burgundy	83-		
	LK6	grey-beige/grey-beige	83-		
	JM2	black-black	83-		
	JM5	blue/blue	83-		
(3)	A 911 521 038 11	cover for cushion leatherette/ centre part uni-coloured cloth	/R	1	SC
	BD4	black/black	-82		
	4ZK	brown/brown	-82		
	BD1	blue/blue			
	BD3	beige/beige			
	BD5	brown/beige			
	LK3	brown-brown	83-		
	LK5	burgundy-burgundy	83-		
	LK6	grey-beige/grey-beige	83-		
	JM2	black-black	83-		
	JM5	blue/blue	83-		
3	A 911 521 037 12	cover for cushion leatherette/ seat surface tartan cloth	/L	1	SC
	8ZU	lobster/brown white/beige	-78		
	5ZU	cork/brown white/beige			
	8ZZ	black-red blue/black			

Pos	Part Number	Name	Remarks	Qty	Model
	2ZZ	black/green blue/black			
	4ZZ	black/brown white/beige			
(3)	A 911 521 038 12	cover for cushion leatherette/ seat surface tartan cloth	/R	1	SC
	8ZU	lobster/brown white/beige	-78		
	5ZU	cork/brown white/beige			
	8ZZ	black-red blue/black			
	2ZZ	black/green blue/black			
	4ZZ	black/brown white/beige			
3	A 911 521 037 12	cover for cushion leatherette/ seat surface berber cloth	/L	1	SC
	GE9	black/ grey/black			
	BD7	blue/ blue/black	-82		
	FE3	brown/ beige/brown	-82		
	BD9	beige/ beige/brown			
	LK8	burgundy/ burgundy-grey	83-		
	JM9	grey-beige/ grey-beige-grey	83-		
	JM3	black/ grey/black	83-		
	JM8	blue/ blue/black	83-		
	JM4	brown/ beige/brown	83-		

Pos	Part Number	Name	Remarks	Qty	Model
(3)	A 911 521 038 12	cover for cushion leatherette/ seat surface berber cloth	/R	1	SC
	GE9	black/ grey/black			
	BD7	blue/ blue/black	-82		
	FE3	brown/ beige/brown	-82		
	BD9	beige/ beige/brown			
	LK8	burgundy/ burgundy-grey	83-		
	JM9	grey-beige/ grey-beige-grey	83-		
	JM3	black/ grey/black	83-		
	JM8	blue/ blue/black	83-		
	JM4	brown/ beige/brown	83-		
3	A 911 521 037 13	cover for cushion leather	/L	1	
	8BB	lobster	-78		
	5BB	cork	-79		
	7BA	black	-79		
	20B	dark green	-82		
	2BF	light green	-78		
	3NG	brown	-82		
	3BA	blue	-79		
	8BM	light red	-79		
	1BA	yellow	-79		
	9BA	white	-79		
	1AJ	black	80-82		
	30B	dark blue	80-82		

Pos	Part Number	Name	Remarks	Qty	Model
	50B	beige	80-		
	40D	cork	80		
	30A	blue	80		
	80B	light red	80		
	10A	yellow	80		
	99A	white	80		
	80S	can-can-red	81-82		
	95S	papyrus	81-		
	60S	hannibal grey	81-		
	20S	mint green	81-		
	LG7	burgundy	83-		
	LG4	pearl white	83-		
	LG5	champagne	83-		
	LG6	dark green	83-		
	KZ2	black	83		
	KZ3	blue	83-		
	KZ4	grey-beige	83-		
	KZ5	brown	83-		
	KZ6	can-can-red	83-		
(3)	A 911 521 038 13	cover for cushion leather	/R	1	
	8BB	lobster	-78		
	5BB	cork	-79		
	7BA	black	-79		
	20B	dark green	-82		
	2BF	light green	-78		
	3NG	brown	-82		
	3BA	blue	-79		
	8BM	light red	-79		
	1BA	yellow	-79		

Pos	Part Number	Name	Remarks	Qty	Model
	9BA	white	-79		
	1AJ	black	80-82		
	30B	dark blue	80-82		
	50B	beige	80-		
	40D	cork	80		
	30A	blue	80		
	80B	light red	80		
	10A	yellow	80		
	99A	white	80		
	80S	can-can-red	81-82		
	95S	papyrus	81-		
	60S	hannibal grey	81-		
	20S	mint green	81-		
	LG7	burgundy	83-		
	LG4	pearl white	83-		
	LG5	champagne	83-		
	LG6	dark green	83-		
	KZ2	black	83		
	KZ3	blue	83-		
	KZ4	grey-beige	83-		
	KZ5	brown	83-		
	KZ6	can-can-red	83-		
3	A 911 521 037 14	cover for cushion leather/ centre part pin stripe velour	/L	1	
	8AK	lobster/lobster	-78		
	5AK	cork/cork			
	7AK	black/black			
	8ZT	black/lobster			
	5ZT	black/cork			

Pos	Part Number	Name	Remarks	Qty	Model
	5ZR	brown/cork			
(3)	A 911 521 038 14	cover for cushion leather/ centre part pin stripe velour	/R	1	
	8AK	lobster/lobster	-78		
	5AK	cork/cork			
	7AK	black/black			
	8ZT	black/lobster			
	5ZT	black/cork			
	5ZR	brown/cork			
3	A 911 521 037 14	cover for cushion leather/ centre part tartan cloth	/L	1	
	8ZU	lobster/brown white/beige	-78		
	5ZU	cork/brown white/beige			
	8ZZ	black-red blue/black			
	2ZZ	black/green blue/black			
	4ZZ	black/brown white/beige			
	4ZS	brown/brown white/beige			
	8ZE	dark blue/ red/blue/black			
	2ZE	dark blue/ green/blue/black			
	4ZH	beige/ brown/white/beige			
(3)	A 911 521 038 14	cover for cushion leather/ centre part tartan cloth	/R	1	
	8ZU	lobster/brown white/beige	-78		
	5ZU	cork/brown white/beige			
	8ZZ	black-red blue/black			
	2ZZ	black/green blue/black			
	4ZZ	black/brown white/beige			
	4ZS	brown/brown white/beige			
	8ZE	dark blue/ red/blue/black			
	2ZE	dark blue/ green/blue/black			
	4ZH	beige/ brown/white/beige			
3	A 911 521 037 14	cover for cushion leather/ centre part checker board velour	/L 80-	1	
	3ZP	black/ blue/black			
	4ZP	black/ brown/black			
	AJ2	black/ grey/black			
	4ZM	brown/ brown/black			
	AJ3	brown/ beige/brown			
	AJ1	dark blue/ blue/black			
	4ZG	beige/ brown/black			
	AJ4	beige/ beige/brown			
	LH1	black/ light grey-black	83-		
	LH3	blue/ blue-grey	83-		

Pos	Part Number	Name	Remarks	Qty	Model
	LH2	brown/ brown-grey	83-		
	LH4	burgundy/ burgundy-grey	83-		
	LH6	grey-beige/ light grey-black	83-		
(3)	A 911 521 038 14	cover for cushion leather/ centre part checker board velour	/R 80-	1	
	3ZP	black/ blue/black			
	4ZP	black/ brown/black			
	AJ2	black/ grey/black			
	4ZM	brown/ brown/black			
	AJ3	brown/ beige/brown			
	AJ1	dark blue/ blue/black			
	4ZG	beige/ brown/black			
	AJ4	beige/ beige/brown			
	LH1	black/ light grey-black	83-		
	LH3	blue/ blue-grey	83-		
	LH2	brown/ brown-grey	83-		
	LH4	burgundy/ burgundy-grey	83-		
	LH6	grey-beige/ light grey-black	83-		
3	A 911 521 037 14	cover for cushion leather/ centre part uni-coloured cloth	/L	1	
	AK4	black/black	-82		
	4ZK	brown/brown			
	AK1	dark blue/blue	-82		
	AK3	beige/beige			
	AK5	brown/beige			
	LJ1	brown-brown	83-		
	LJ2	burgundy-burgundy	83-		
	LJ3	grey-beige/grey-beige	83-		
	JN6	black-black	83-		
	JT4	blue/blue	83		
(3)	A 911 521 038 14	cover for cushion leather/ centre part uni-coloured cloth	/R	1	
	AK4	black/black	-82		
	4ZK	brown/brown			
	AK1	dark blue/blue	-82		
	AK3	beige/beige			
	AK5	brown/beige			
	LJ1	brown-brown	83-		
	LJ2	burgundy-burgundy	83-		
	LJ3	grey-beige/grey-beige	83-		
	JN6	black-black	83-		
	JT4	blue/blue	83		
3	A 911 521 037 14	cover for cushion leather/ centre part stripe design	/L	1	M 403
	HS6	burgundy/ grey-burgundy			
(3)	A 911 521 038 14	cover for cushion leather/ centre part stripe design	/R	1	M 403

Pos	Part Number	Name	Remarks	Qty	Model
	HS6	burgundy/ grey-burgundy			
3	A 930 521 037 61	cover for cushion leather/ centre part tartan cloth	/L -78	1	
	8ZU	lobster/brown white/beige			
	5ZU	cork/brown white/beige			
	8ZZ	black-red blue/black			
	2ZZ	black/green blue/black			
	4ZZ	black/brown white/beige			
(3)	A 930 521 038 61	cover for cushion leather/ centre part tartan cloth	/R -78	1	
	8ZU	lobster/brown white/beige			
	5ZU	cork/brown white/beige			
	8ZZ	black-red blue/black			
	2ZZ	black/green blue/black			
	4ZZ	black/brown white/beige			
3	A 930 521 037 10	cover for cushion leather/ seat surface tartan cloth	/L	1	
	8ZU	lobster/brown white/beige	78		
	5ZU	cork/brown white/beige			
	8ZZ	black-red blue/black			
	2ZZ	black/green blue/black			
	4ZZ	black/brown white/beige			
(3)	A 930 521 038 10	cover for cushion leather/ seat surface tartan cloth	/R	1	
	8ZU	lobster/brown white/beige	78		
	5ZU	cork/brown white/beige			
	8ZZ	black-red blue/black			
	2ZZ	black/green blue/black			
	4ZZ	black/brown white/beige			
3	A 930 521 037 10	cover for cushion leather/ seat surface berber cloth	/L	1	
	AK6	black/ grey/black	-82		
	AK7	dark blue/ blue/black	-82		
	AK8	brown/ beige/brown	-82		
	AK9	beige/ beige/brown			
	LH8	burgundy/ burgundy-grey	83-		
	LH9	grey-beige/ grey-beige-grey	83-		
	JH1	black/ grey/black	83-		
	JD4	blue/ blue/black	83-		
	JH2	brown/ beige/brown	83-		

Pos	Part Number	Name	Remarks	Qty	Model
(3)	A 930 521 038 10	cover for cushion leather/ seat surface berber cloth	/R	1	
	AK6	black/ grey/black	-82		
	AK7	dark blue/ blue/black	-82		
	AK8	brown/ beige/brown	-82		
	AK9	beige/ beige/brown			
	LH8	burgundy/ burgundy-grey	83-		
	LH9	grey-beige/ grey-beige-grey	83-		
	JH1	black/ grey/black	83-		
	JD4	blue/ blue/black	83-		
	JH2	brown/ beige/brown	83-		
4	911 521 027 58	backrest frame	/L	1	
(4)	911 521 028 58	backrest frame	/R	1	
5	A 911 521 072 20	backrest cover leatherette/ centre part braided texture		2	SC
	8AT	lobster	-78		
	5AT	cork			
	7AT	black			
	4AT	brown	79-		
5	A 911 521 072 21	backrest cover leatherette/ centre part pin stripe velour		2	SC
	8AK	lobster/lobster	-78		
	5AK	cork/cork			
	7AK	black/black			
	8ZT	black/lobster			
	5ZT	black/cork			
	5ZQ	brown/cork	79-		
5	A 911 521 072 21	backrest cover leatherette/ centre part tartan cloth		2	SC
	8ZU	lobster/brown white/beige	-78		
	5ZU	cork/brown white/beige			
	8ZZ	black-red blue/black			
	2ZZ	black/green blue/black			
	4ZZ	black/brown white/beige			
	4ZS	brown/brown white/beige	79-		
	8ZE	dark blue/ red/blue/black			
	2ZE	dark blue green/blue/black			
	4ZH	beige/ brown/white/beige			
5	A 911 521 072 21	backrest cover leatherette/ centre part checker board velour	80-	2	SC
	3ZP	black/ blue/black			
	4ZP	black/ brown/black			
	FD8	black/ grey/black			
	4ZM	brown/ brown/black			

Pos	Part Number	Name	Remarks	Qty	Model
	FD9	brown/ beige/brown			
	BC1	blue/ blue/black			
	4ZG	beige/ brown/black			
	BC4	beige/ beige/brown			
	LD5	black/ light grey-black	83-		
	LJ8	blue/ blue-grey	83-		
	LD6	brown/ brown-grey	83-		
	LJ9	burgundy/ burgundy-grey	83-		
	LK1	grey-beige/ light grey-black	83-		
5	A 911 521 072 21	backrest cover leatherette/ centre part uni-coloured cloth	80-	2	SC
	BD4	black/black	-82		
	4ZK	brown/brown	-82		
	BD1	blue/blue			
	BD3	beige/beige			
	BD5	brown-beige			
	LK3	brown-brown	83-		
	LK5	burgundy-burgundy	83-		
	LK6	grey-beige/grey-beige	83-		
	JM2	black/black	83-		
	JM5	blue/blue			
5	A 911 521 072 22	backrest cover leatherette/ backrest surface tartan cloth		2	SC

Pos	Part Number	Name	Remarks	Qty	Model
	8ZU	lobster/brown white/beige	-78		
	5ZU	cork/brown white/beige			
	8ZZ	black-red blue/black			
	2ZZ	black/green blue/black			
	4ZZ	black/brown white/beige			
5	A 911 521 072 22	backrest cover leatherette/ backrest surface berber cloth	81-	2	SC
	GE9	black/ grey/black			
	BD7	blue/ blue/black	-82		
	FE3	brown/ beige/brown	-82		
	BD9	beige/ beige/brown			
	LK8	burgundy/ burgundy-grey	83-		
	JM9	grey-beige/ grey-beige-grey	83-		
	JM3	black/ grey/black	83-		
	JM8	blue/ blue/black	83-		
	JM4	brown/ beige/brown	83-		
5	A 911 521 072 23	backrest cover leather		2	
	8BB	lobster	-78		
	5BB	cork	-79		
	7BA	black	-79		
	20B	dark green	-82		

Pos	Part Number	Name	Remarks	Qty	Model
	2BF	light green	-78		
	3NG	brown	-82		
	3BA	blue	-79		
	8BM	light red	-79		
	1BA	yellow	-79		
	9BA	white	-79		
	1AJ	black	80-82		
	30B	dark blue	80-82		
	50B	beige	80-		
	40D	cork	80		
	30A	blue	80		
	80B	light red	80		
	10A	yellow	80		
	99A	white	80		
	80S	can-can-red	81-82		
	95S	papyrus	81-		
	60S	hannibal grey	81-		
	20S	mint green	81-		
	LG7	burgundy	83-		
	LG4	pearl white	83-		
	LG5	champagne	83-		
	LG6	dark green	83-		
	KZ2	black	83-		
	KZ3	blue	83-		
	KZ4	grey-beige	83-		
	KZ5	brown	83-		
	KZ6	can-can-red	83-		
5	A 911 521 072 24	backrest cover leather/ centre part pin stripe velour		2	
	8AK	lobster/lobster	-78		
	5AK	cork/cork			
	7AK	black/black			
	8ZT	black/lobster			
	5ZT	black/cork			
	5ZR	brown/cork	-79		
5	A 911 521 072 24	backrest cover leather/ centre part tartan cloth		2	
	8ZU	lobster/brown white/beige	-78		
	5ZU	cork/brown white/beige			
	8ZZ	black-red blue/black			
	2ZZ	black/green blue/black			
	4ZZ	black/brown white/beige			
	4ZS	brown/brown white/beige	79-		
	8ZE	dark blue/ red/blue/black			
	2ZE	dark blue/ green/blue/black			
	4ZH	beige/ brown/white/beige			
5	A 911 521 072 24	backrest cover leather/ centre part checker board velour	80-	2	
	3ZP	black/ blue/black			
	4ZP	black/ brown/black			
	AJ2	black/ grey/black			

Pos	Part Number	Name	Remarks	Qty	Model
	4ZM	brown/ brown/black			
	AJ3	brown/ beige/brown			
	AJ1	dark blue/ blue/black			
	4ZG	beige/ brown/black			
	AJ4	beige/ beige/brown			
	LH1	black/ light grey-black	83-		
	LH3	blue/ blue-grey	83-		
	LH2	brown/ brown-grey	83-		
	LH4	burgundy/ burgundy-grey	83-		
	LH6	grey-beige/ light grey-black	83-		
5	A 911 521 072 24	backrest cover leather/ centre part uni-coloured cloth	80-	2	
	AK4	black/black	-82		
	4ZK	brown/brown			
	AK1	dark blue/blue	-82		
	AK3	beige/beige			
	AK5	brown/beige			
	LJ1	brown-brown	83-		
	LJ2	burgundy-burgundy	83-		
	LJ3	grey-beige/grey-beige	83-		
	JN6	black-black	83-		
	JT4	blue/blue	83-		

Pos	Part Number	Name	Remarks	Qty	Model
5	A 911 521 072 24	backrest cover leather centre part stripe design		2	M 403
	HS6	burgundy/ grey-burgundy			
5	A 930 521 072 61	backrest cover leather/ centre part tartan cloth	-78	1	
	8ZU	lobster/brown white/beige			
	5ZU	cork/brown white/beige			
	8ZZ	black-red blue/black			
	2ZZ	black/green blue/black			
	4ZZ	black/brown white/beige			
5	A 930 521 072 20	backrest cover leather/ backrest surface tartan cloth		2	
	8ZU	lobster/brown white/beige	-78		
	5ZU	cork/brown white/beige			
	8ZZ	black-red blue/black			
	2ZZ	black/green blue/black			
	4ZZ	black/brown white/beige			
5	A 930 521 072 20	backrest cover leather/ backrest surface berber cloth	81-	2	
	AK6	black/ grey/black	-82		
	AK7	dark blue/ blue/black	-82		

Pos	Part Number	Name	Remarks	Qty	Model
	AK8	brown/ beige/brown	-82		
	AK9	beige/ beige/brown			
	LH8	burgundy/ burgundy-grey	83-		
	LH9	grey-beige/ grey-beige-grey	83-		
	JH1	black/ grey/black	83-		
	JD4	blue/ blue/black	83-		
	JH2	brown/ beige/brown	83-		
6	911 521 393 02	foam part backrest		2	
7	911 521 575 00	filler piece backrest frame		2	
8	911 521 435 00	filler piece		2	
9	911 521 361 00	cable release backrest		2	
10	911 521 369 00	terminal for cable		2	
11	911 521 343 00	guide bush for cable		2	
12	311 881 287 A	spring for actuating lever		2	
		- -- E N D -- -			

Model	Year	MG	SG	Illustration	Restrictions	Update	11:29	18.08.2006	PORSCHE PET PORSCHE
911	83	8	08	808-10		203			

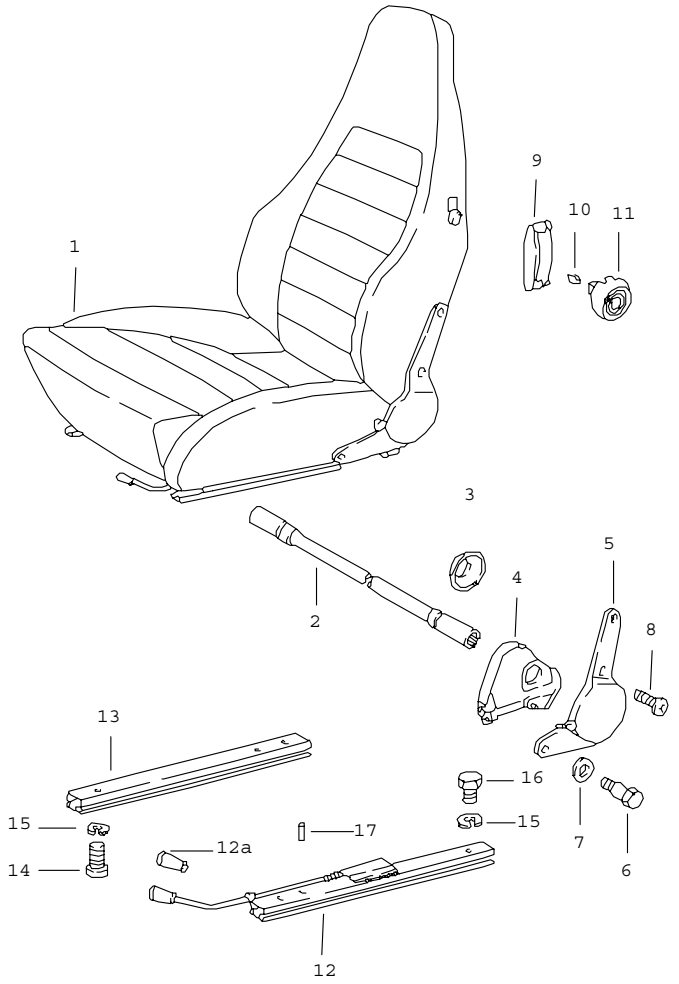

Pos	Part Number	Name	Remarks	Qty	Model
		sports seat complete	-80		
1	A 911 521 007 55	sports seat leatherette/ centre part pin stripe velour	/L	1	
	8AK	lobster/lobster	-78		
	5AK	cork/cork			
	7AK	black/black			
	8ZT	black/lobster			
	5ZT	black/cork			
	5ZQ	brown/cork	79-		
(1)	A 911 521 008 55	sports seat leatherette/ centre part pin stripe velour	/R	1	
	8AK	lobster/lobster	-78		
	5AK	cork/cork			
	7AK	black/black			
	8ZT	black/lobster			
	5ZT	black/cork			
	5ZQ	brown/cork	79-		
1	A 911 521 007 55	sports seat leatherette/ centre part tartan cloth	/L	1	
	8ZU	lobster/brown white/beige	-78		
	5ZU	cork/brown white/beige			
	8ZZ	black-red blue/black			
	2ZZ	black/green blue/black			
	4ZZ	black/brown white/beige			

Pos	Part Number	Name	Remarks	Qty	Model
	4ZS	brown/brown white/beige	79-		
	8ZE	dark blue/ red/blue/black			
	2ZE	dark blue/ green/blue/black			
	4ZH	beige/ brown/white/beige			
(1)	A 911 521 008 55	sports seat leatherette/ centre part tartan cloth	/R	1	
	8ZU	lobster/brown white/beige	-78		
	5ZU	cork/brown white/beige			
	8ZZ	black-red blue/black			
	2ZZ	black/green blue/black			
	4ZZ	black/brown white/beige			
	4ZS	brown/brown white/beige	79-		
	8ZE	dark blue/ red/blue/black			
	2ZE	dark blue/ green/blue/black			
	4ZH	beige/ brown/white/beige			
1	A 911 521 007 55	sports seat leatherette/ centre part checker board velour	/L 80	1	
	3ZP	black/ blue/black			
	4ZP	black/ brown/black			
	6ZP	black/ grey/black			
	4ZM	brown/ brown/black			
	5ZM	brown/ beige/brown			
	3ZD	dark blue/ blue/black			
	4ZG	beige/ brown/black			
	5ZG	beige/ beige/brown			
(1)	A 911 521 008 55	sports seat leatherette/ centre part checker board velour	/R 80	1	
	3ZP	black/ blue/black			
	4ZP	black/ brown/black			
	6ZP	black/ grey/black			
	4ZM	brown/ brown/black			
	5ZM	brown/ beige/brown			
	3ZD	dark blue/ blue/black			
	4ZG	beige/ brown/black			
	5ZG	beige/ beige/brown			
1	A 911 521 007 55	sports seat leatherette/ centre part uni-coloured cloth	/L 80	1	
	7ZN	black/black			
	4ZK	brown/brown			
	3ZC	dark blue/blue			
	5ZF	beige/beige			

Pos	Part Number	Name	Remarks	Qty	Model
(1)	A 911 521 008 55	sports seat leatherette/ centre part uni-coloured cloth	/R 80	1	
	7ZN	black/black			
	4ZK	brown/brown			
	3ZC	dark blue/blue			
	5ZF	beige/beige			
1	A 911 521 007 56	sports seat leatherette/ centre part braided texture	/L	1	
	8AT	lobster	-78		
	5AT	cork			
	7AT	black			
	4AT	brown	79-		
	50B	beige			
(1)	A 911 521 008 56	sports seat leatherette/ centre part braided texture	/R	1	
	8AT	lobster	-78		
	5AT	cork			
	7AT	black			
	4AT	brown	79-		
	50B	beige			
1	A 911 521 007 57	sports seat leather	/L	1	
	8BB	lobster	-78		
	5BB	cork	-79		
	7BA	black	-79		
	20B	dark green			
	2BF	light green	-78		
	40A	brown			
	3BA	blue	-79		
	8BM	light red	-79		
	1BA	yellow	-79		
	9BA	white	-79		
	70A	black	80-		
	30B	dark blue	80-		
	50B	beige	80-		
	40D	cork	80-		
	30A	blue	80-		
	80B	light red	80-		
	10A	yellow	80-		
	99A	white	80-		
(1)	A 911 521 008 57	sports seat leather	/R	1	
	8BB	lobster	-78		
	5BB	cork	-79		
	7BA	black	-79		
	20B	dark green			
	2BF	light green	-78		
	40A	brown			
	3BA	blue	-79		
	8BM	light red	-79		
	1BA	yellow	-79		
	9BA	white	-79		
	70A	black	80-		
	30B	dark blue	80-		
	50B	beige	80-		
	40D	cork	80-		
	30A	blue	80-		
	80B	light red	80-		

Pos	Part Number	Name	Remarks	Qty	Model
	10A	yellow	80-		
	99A	white	80-		
2	911 521 045 03	connecting rod		2	
3	911 521 147 01	cap		2	
4	911 521 731 00	inner part	/L	1	
(4)	911 521 732 00	inner part	/R	1	
5	911 521 041 03	reclining seat fitting left seat with control lever	/L	1	
(5)	911 521 042 03	reclining seat fitting right seat with control lever	/R	1	
(5)	911 521 044 03	reclining seat fitting left seat without control lever	/R	1	
(5)	911 521 043 03	reclining seat fitting right seat without control lever	/L	1	
6	911 521 695 00	hexagon-head bolt		4	
7	911 521 130 01	washer		4	
8	900 270 033 02	lens-head screw M 8 X 30		8	
9	311 881 607 A	rose		2	
10	311 881 247	clamp		2	
11	113 881 633 E	control button		2	
	01C	satin black			
12	A 928 521 489 02	seat rail	/L	1	
(12)	A 928 521 490 02	seat rail	/R	1	
(12A)	911 521 533 01	handle f.longitudinal adjustment		2	
	01C	satin black			
13	A 944 521 491 00	seat rail without locking device see tpi GR.8 NR.34		2	
13	944 521 491 00	seat rail		2	
14	900 186 018 02	pan-head screw M 6 X 20		8	
15	N 012 006 4	lock ring B 6		16	
16	900 075 057 02	hexagon-head bolt M 6 X 16		8	
17	900 012 123 00	pin A 2,5 X 12		2	

- -- E N D -- -

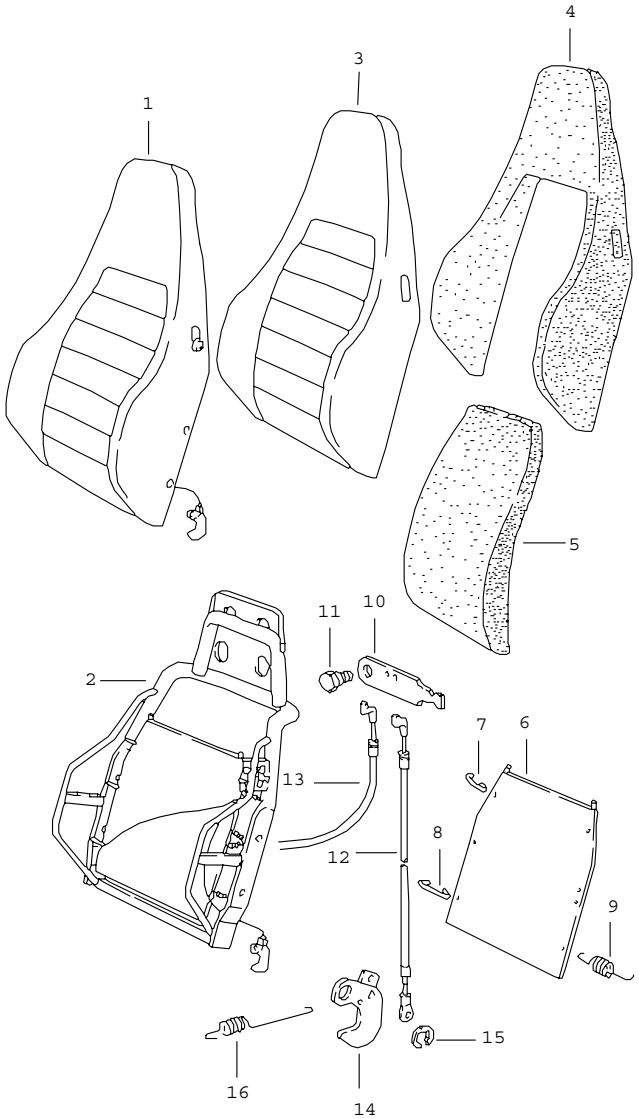

Pos	Part Number	Name	Remarks	Qty	Model
		sports seat backrest single parts	-80		
1	A 911 521 603 00	backrest leatherette/ centre part pin stripe velour	/L	1	
	8AK	lobster/lobster	-78		
	5AK	cork/cork			
	7AK	black/black			
	8ZT	black/lobster			
	5ZT	black/cork			
	5ZQ	brown/cork	79-		
(1)	A 911 521 604 00	backrest leatherette/ centre part pin stripe velour	/R	1	
	8AK	lobster/lobster	-78		
	5AK	cork/cork			
	7AK	black/black			
	8ZT	black/lobster			
	5ZT	black/cork			
	5ZQ	brown/cork	79-		
1	A 911 521 603 00	backrest leatherette/ centre part tartan cloth	/L	1	
	8ZU	lobster/brown white/beige	-78		
	5ZU	cork/brown white/beige			
	8ZZ	black-red blue/black			
	2ZZ	black/green blue/black			
	4ZZ	black/brown white/beige			

Pos	Part Number	Name	Remarks	Qty	Model
	4ZS	brown/brown white/beige	79-		
	8ZE	dark blue/ red/blue/black			
	2ZE	dark blue/ green/blue/black			
	4ZH	beige/ brown/white/beige			
(1)	A 911 521 604 00	backrest leatherette/ centre part tartan cloth	/R	1	
	8ZU	lobster/brown white/beige	-78		
	5ZU	cork/brown white/beige			
	8ZZ	black-red blue/black			
	2ZZ	black/green blue/black			
	4ZZ	black/brown white/beige			
	4ZS	brown/brown white/beige	79-		
	8ZE	dark blue/ red/blue/black			
	2ZE	dark blue/ green/blue/black			
	4ZH	beige/ brown/white/beige			
1	A 911 521 603 00	backrest leatherette/ centre part checker board velour	/L 80	1	
	3ZP	black/ blue/black			
	4ZP	black/ brown/black			
	6ZP	black/ grey/black			
	4ZM	brown/ brown/black			
	5ZM	brown/ beige/brown			
	3ZD	dark blue/ blue/black			
	4ZG	beige/ brown/black			
	5ZG	beige/ beige/brown			
(1)	A 911 521 604 00	backrest leatherette/ centre part checker board velour	/R 80	1	
	3ZP	black/ blue/black			
	4ZP	black/ brown/black			
	6ZP	black/ grey/black			
	4ZM	brown/ brown/black			
	5ZM	brown/ beige/brown			
	3ZD	dark blue/ blue/black			
	4ZG	beige/ brown/black			
	5ZG	beige/ beige/brown			
1	A 911 521 603 00	backrest leatherette/ centre part uni-coloured cloth	/L 80	1	
	7ZN	black/black			
	4ZK	brown/brown			
	3ZC	dark blue/blue			
	5ZF	beige/beige			

Model	Year	MG	SG	Illustration	Restrictions	Update	11:29	18.08.2006	PORSCHE PET PORSCHE
911	83	8	08	808-15		203			

Pos	Part Number	Name	Remarks	Qty	Model
(1)	A 911 521 604 00	backrest leatherette/ centre part uni-coloured cloth	/R	1	
			80		
	7ZN	black/black			
	4ZK	brown/brown			
	3ZC	dark blue/blue			
	5ZF	beige/beige			
1	A 911 521 603 01	backrest leatherette/ centre part braided texture	/L	1	
	8AT	lobster	-78		
	5AT	cork			
	7AT	black			
	4AT	brown	79-		
	50B	beige			
(1)	A 911 521 604 01	backrest leatherette/ centre part braided texture	/R	1	
	8AT	lobster	-78		
	5AT	cork			
	7AT	black			
	4AT	brown	79-		
	50B	beige			
1	A 911 521 603 02	backrest leather	/L	1	
	8BB	lobster	-78		
	5BB	cork	-79		
	7BA	black	-79		
	20B	dark green			
	2BF	light green	-78		
	40A	brown			
	3BA	blue	-79		
	8BM	light red	-79		
	1BA	yellow	-79		
	9BA	white	-79		
	70A	black	80		
	30B	dark blue	80		
	50B	beige	80		
	40D	cork	80		
	30A	blue	80		
	80B	light red	80		
	10A	yellow	80		
	99A	white	80		
(1)	A 911 521 604 02	backrest leather	/R	1	
	8BB	lobster	-78		
	5BB	cork	-79		
	7BA	black	-79		
	20B	dark green			
	2BF	light green	-78		
	40A	brown			
	3BA	blue	-79		
	8BM	light red	-79		
	1BA	yellow	-79		
	9BA	white	-79		
	70A	black	80		
	30B	dark blue	80		
	50B	beige	80		
	40D	cork	80		
	30A	blue	80		
	80B	light red	80		

Pos	Part Number	Name	Remarks	Qty	Model
	10A	yellow	80		
	99A	white	80		
2	911 521 613 00	backrest frame	/L	1	
(2)	911 521 614 00	backrest frame	/R	1	
3	A 911 521 072 01	backrest cover leatherette/ centre part pin stripe velour		2	
	8AK	lobster/lobster	-78		
	5AK	cork/cork			
	7AK	black/black			
	8ZT	black/lobster			
	5ZT	black/cork			
	5ZQ	brown/cork	79-		
3	A 911 521 072 01	backrest cover leatherette/ centre part tartan cloth		2	
	8ZU	lobster/brown white/beige	-78		
	5ZU	cork/brown white/beige			
	8ZZ	black-red blue/black			
	2ZZ	black/green blue/black			
	4ZZ	black/brown white/beige			
	4ZS	brown/brown white/beige	79-		
	8ZE	dark blue/ red/blue/black			
	2ZE	dark blue/ green/blue/black			
	4ZH	beige/ brown/white/beige			
3	A 911 521 072 01	backrest cover leatherette/ centre part checker board velour	80	2	
	3ZP	black/ blue/black			
	4ZP	black/ brown/black			
	6ZP	black/ grey/black			
	4ZM	brown/ brown/black			
	5ZM	brown/ beige/brown			
	3ZD	dark blue/ blue/black			
	4ZG	beige/ brown/black			
	5ZG	beige/ beige/brown			
3	A 911 521 072 01	backrest cover leatherette/ centre part uni-coloured cloth	80	2	
	7ZN	black/black			
	4ZK	brown/brown			
	3ZC	dark blue/blue			
	5ZF	beige/beige			
3	A 911 521 072 02	backrest cover leatherette/ centre part braided texture		2	
	8AT	lobster	-78		
	5AT	cork			
	7AT	black			
	4AT	brown	79-		
	50B	beige			

Pos	Part Number	Name	Remarks	Qty	Model
3	A 911 521 072 03	backrest cover leather		2	
	8BB	lobster	-78		
	5BB	cork	-79		
	7BA	black	-79		
	20B	dark green			
	2BF	light green	-78		
	40A	brown			
	3BA	blue	-79		
	8BM	light red	-79		
	1BA	yellow	-79		
	9BA	white	-79		
	70A	black	80-		
	30B	dark blue	80-		
	50B	beige	80-		
	40D	cork	80-		
	30A	blue	80-		
	80B	light red	80-		
	10A	yellow	80		
	99A	white	80-		
4	911 521 751 00	foam part backrest side part		2	
5	911 521 104 02	foam part backrest cushion		2	
6	911 521 651 00	belt		2	
7	911 521 693 00	belt hook upper		2	
8	911 521 713 00	belt hook lower		4	
9	911 521 689 00	spring		8	
10	911 521 721 00	locking lever		2	
11	911 521 723 00	shouldered bolt		2	
12	911 521 615 00	cable short		2	
13	911 521 616 00	cable long		2	
14	911 521 563 00	locking hook	/L	2	
(14)	911 521 564 00	locking hook	/R	2	
15	N 012 439 2	lock washer 8		4	
16	911 521 733 00	tension spring	/L	1	
(16)	911 521 734 00	tension spring	/R	1	
		- -- E N D -- -			

Model	Year	MG	SG	Illustration	Restrictions	Update	11:30	18.08.2006	PORSCHE PET PORSCHE
911	83	8	08	808-20		203			

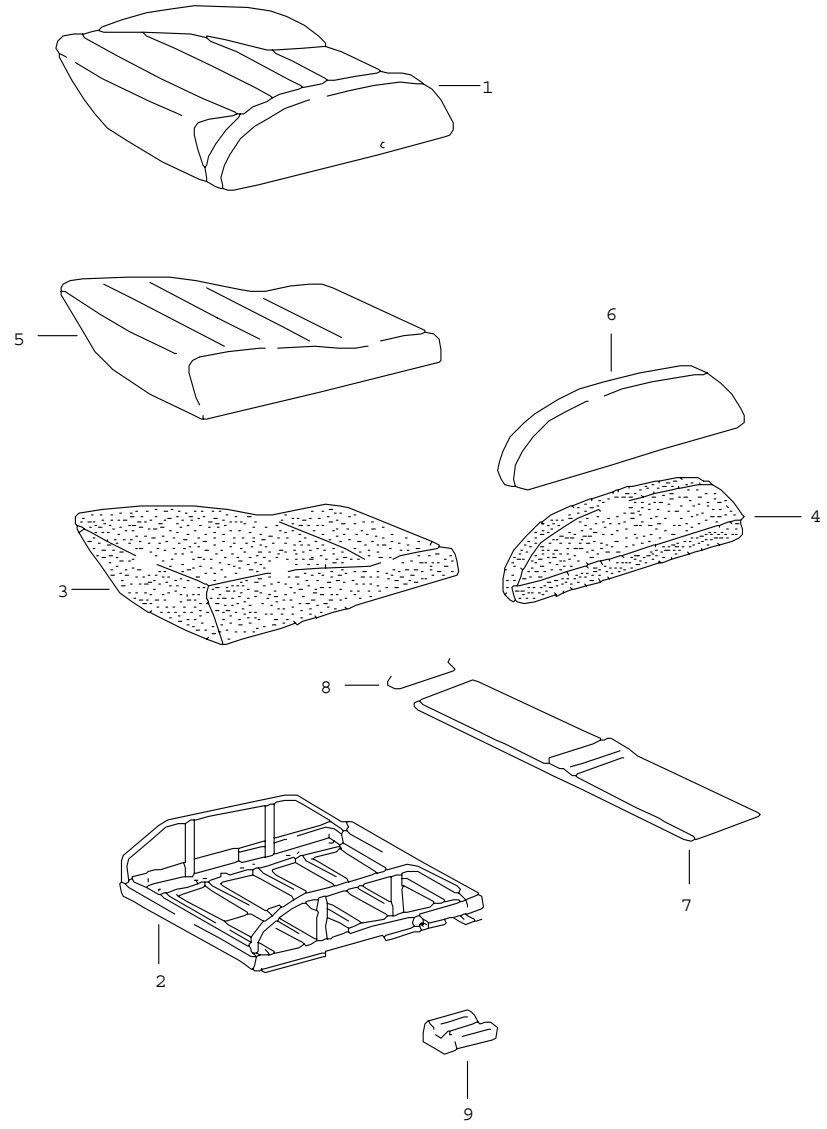

Pos	Part Number	Name	Remarks	Qty	Model
		sports seat seat cushion single parts	-80		
1	A 911 521 605 00	seat cushion leatherette/ centre part pin stripe velour		2	
	8AK	lobster/lobster	-78		
	5AK	cork/cork			
	7AK	black/black			
	8ZT	black/lobster			
	5ZT	black/cork			
	5ZQ	brown/cork	79-		
1	A 911 521 605 00	seat cushion leatherette/ centre part tartan cloth		2	
	8ZU	lobster/brown white/beige	-78		
	5ZU	cork/brown white/beige			
	8ZZ	black-red blue/black			
	2ZZ	black/green blue/black			
	4ZZ	black/brown white/beige			
	4ZS	brown/brown white/beige	79-		
	8ZE	dark blue/ red/blue/black			
	2ZE	dark blue/ green/blue/black			
	4ZH	beige/ brown/white/beige			
1	A 911 521 605 00	seat cushion leatherette/ centre part checker board velour	80	2	

Pos	Part Number	Name	Remarks	Qty	Model
	3ZP	black/ blue/black			
	4ZP	black/ brown/black			
	6ZP	black/ grey/black			
	4ZM	brown/ brown/black			
	5ZM	brown/ beige/brown			
	3ZD	dark blue/ blue/black			
	4ZG	beige/ brown/black			
	5ZG	beige/ beige/brown			
1	A 911 521 605 00	seat cushion leatherette/ centre part uni-coloured cloth	80	2	
	7ZN	black/black			
	4ZK	brown/brown			
	3ZC	dark blue/blue			
	5ZF	beige/beige			
1	A 911 521 605 01	seat cushion leatherette/ centre part braided texture		2	
	8AT	lobster	-78		
	5AT	cork			
	7AT	black			
	4AT	brown	79-		
	50B	beige			
1	A 911 521 605 02	seat cushion leather		2	
	8BB	lobster	-78		
	5BB	cork	-79		
	7BA	black	-79		
	20B	dark green			
	2BF	light green	-78		
	40A	brown			
	3BA	blue	-79		
	8BM	light red	-79		
	1BA	yellow	-79		
	9BA	white	-79		
	70A	black	80		
	30B	dark blue	80		
	50B	beige	80		
	40D	cork	80		
	30A	blue	80		
	80B	light red	80		
	10A	yellow	80		
	99A	white	80		
2	911 521 621 00	seat frame		2	
3	911 521 697 00	foam part seat cushion		2	
4	911 521 683 00	foam part cushion	/L	1	
(4)	911 521 684 00	foam part cushion	/R	1	
5	A 911 521 197 02	cover for cushion pin stripe velour		2	
	8AK	lobster			
	5AK	cork			
	7AK	black			
5	A 911 521 197 02	cover for cushion tartan cloth		2	
	8AB	red/blue/black			
	2AC	green/blue/black			

Pos	Part Number	Name	Remarks	Qty	Model
	4AD	brown/white/beige			
5	A 911 521 197 02	cover for cushion checker board velour		2	
	37A	blue/black			
	47A	brown/black			
	67A	grey/black			
	54A	beige/brown			
5	A 911 521 197 02	cover for cushion uni-coloured cloth		2	
	30C	blue			
	40C	brown			
	50C	beige			
	70F	black			
5	A 911 521 197 03	cover for cushion leatherette braided texture		2	
	8AT	lobster	-78		
	5AT	cork			
	7AT	black			
	4AT	brown	79-		
	50B	beige			
5	A 911 521 197 04	cover for cushion leather		2	
	8BB	lobster	-78		
	5BB	cork	-79		
	7BA	black	-79		
	20B	dark green			
	2BF	light green	-78		
	40A	brown			
	3BA	blue	-79		
	8BM	light red	-79		
	1BA	yellow	-79		

Pos	Part Number	Name	Remarks	Qty	Model
	9BA	white	-79		
	70A	black	80		
	30B	dark blue	80		
	50B	beige	80		
	40D	cork	80		
	30A	blue	80		
	80B	light red	80		
	10A	yellow	80		
	99A	white	80		
6	A 911 521 073 02	seat side part cover leatherette	/L	1	
	8AS	lobster	-78		
	5AS	cork			
	7AS	black			
	40A	brown	79-		
	50B	beige			
(6)	A 911 521 074 02	seat side part cover leatherette	/R	1	
	8AS	lobster	-78		
	5AS	cork			
	7AS	black			
	40A	brown	79-		
	50B	beige			
6	A 911 521 073 03	seat side part cover leather	/L	1	
	8AH	lobster	-78		
	5AH	cork	-79		
	7AG	black	-79		
	20B	dark green			
	2AP	light green	-78		
	40A	brown			

Pos	Part Number	Name	Remarks	Qty	Model
	3AG	blue	-79		
	8AT	light red	-79		
	1AG	yellow	-79		
	9AG	white	-79		
	70A	black	80		
	30B	dark blue	80		
	50B	beige	80		
	40D	cork	80		
	30A	blue	80		
	80B	light red	80		
	10A	yellow	80		
	99A	white	80		
(6)	A 911 521 074 03	seat side part cover leather	/R	1	
	8AH	lobster	-78		
	5AH	cork	-79		
	7AG	black	-79		
	20B	dark green			
	2AP	light green	-78		
	40A	brown			
	3AG	blue	-79		
	8AT	light red	-79		
	1AG	yellow	-79		
	9AG	white	-79		
	70A	black	80		
	30B	dark blue	80		
	50B	beige	80		
	40D	cork	80		
	30A	blue	80		
	80B	light red	80		
	10A	yellow	80		
	99A	white	80		
7	911 521 685 00	belt		8	
8	911 521 691 00	belt hook		16	
9	901 521 191 00	rubber support	/L	1	
(9)	901 521 192 00	rubber support	/R	1	
		- -- E N D -- -			

Model	Year	MG	SG	Illustration	Restrictions	Update	11:30	18.08.2006	PORSCHE PET PORSCHE
911	83	8	08	808-25		203			

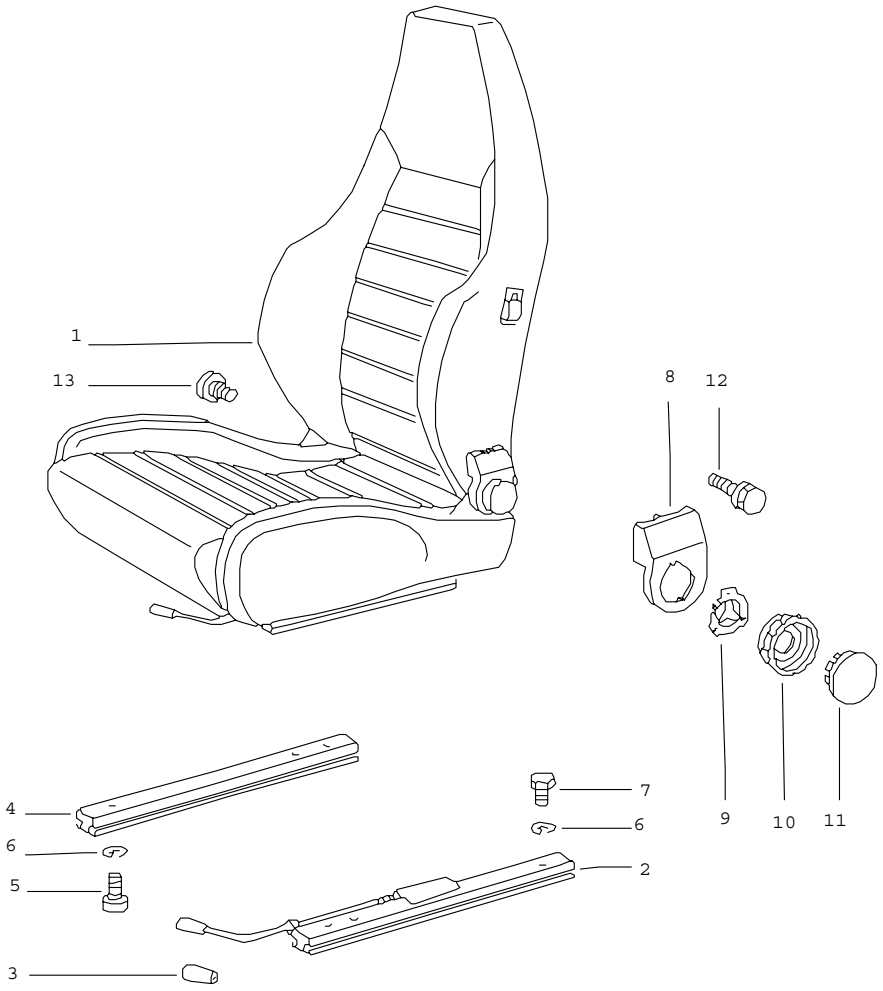

Pos	Part Number	Name	Remarks	Qty	Model
		sports seat complete	81-		
1	A 911 521 007 61	sports seat leather	/L	1	
	1AJ	black	-82		
	3NG	brown	-82		
	30B	dark blue	-82		
	50B	beige			
	80S	can-can-red			
	95S	papyrus			
	60S	hannibal grey			
	20S	mint green			
	LG7	burgundy	83-		
	KZ4	grey-beige	83-		
	KZ2	black	83-		
	KZ3	blue	83-		
	KZ5	brown	83-		
(1)	A 911 521 008 61	sports seat leather	/R	1	
	1AJ	black	-82		
	3NG	brown	-82		
	30B	dark blue	-82		
	50B	beige			
	80S	can-can-red			
	95S	papyrus			
	60S	hannibal grey			
	20S	mint green			
	LG7	burgundy	83-		
	KZ4	grey-beige	83-		
	KZ2	black	83-		
	KZ3	blue	83-		

Pos	Part Number	Name	Remarks	Qty	Model
	KZ5	brown	83-		
1	A 911 521 007 61	sports seat leather/ piping	/L	1	
	6AD	russet doric grey			
(1)	A 911 521 008 61	sports seat leather/ piping	/R	1	
	6AD	russet doric grey			
1	A 911 521 007 07	sports seat leatherette/ seat and backrest surface berber cloth	/L	1	
	GE9	black/ grey/black	-82		
	BD7	blue/ blue/black	-82		
	FE3	brown/ beige/brown	-82		
	BD9	beige/ beige/brown			
	LK8	burgundy/ burgundy-grey	83-		
	JM9	grey-beige/ grey-beige-grey	83-		
	JM3	black/ grey/black	83-		
	JM8	blue/ blue/black	83-		
	JM4	brown/ beige/brown	83-		
(1)	A 911 521 008 07	sports seat leatherette/ seat and backrest surface berber cloth	/R	1	
	GE9	black/ grey/black	-82		
	BD7	blue/ blue/black	-82		

Pos	Part Number	Name	Remarks	Qty	Model
	FE3	brown/ beige/brown	-82		
	BD9	beige/ beige/brown			
	LK8	burgundy/ burgundy-grey	83-		
	JM9	grey-beige/ grey-beige-grey	83-		
	JM3	black/ grey/black	83-		
	JM8	blue/ blue/black	83-		
	JM4	brown/ beige/brown	83-		
2	A 928 521 489 02	seat rail with locking device	/L	1	
(2)	A 928 521 490 02	seat rail with locking device	/R	1	
(3)	911 521 533 01	handle f.longitudinal adjustment		2	
	01C	satin black			
4	A 944 521 491 00	seat rail without locking device see tpi GR.8 NR.34		2	
4	944 521 491 00	seat rail		2	
5	N 014 761 2	pan-head screw M 6 X 12		8	
6	N 012 006 4	lock ring B 6		16	
7	900 075 057 02	hexagon-head bolt M 6 X 16		8	
8	911 521 359 02	cover	/L	1	
(8)	911 521 360 02	cover	/R	1	
9	911 521 571 00	tensioning spring		2	
10	911 521 381 00	shifting wheel		2	
11	911 521 383 00	cover		2	

Pos	Part Number	Name	Remarks	Qty	Model	Pos	Part Number	Name	Remarks	Qty	Model
12	911 521 371 00	screw inner		2							
13	911 521 547 00	hexagon-head bolt M 10 X 20		4							
		- -- E N D -- -									

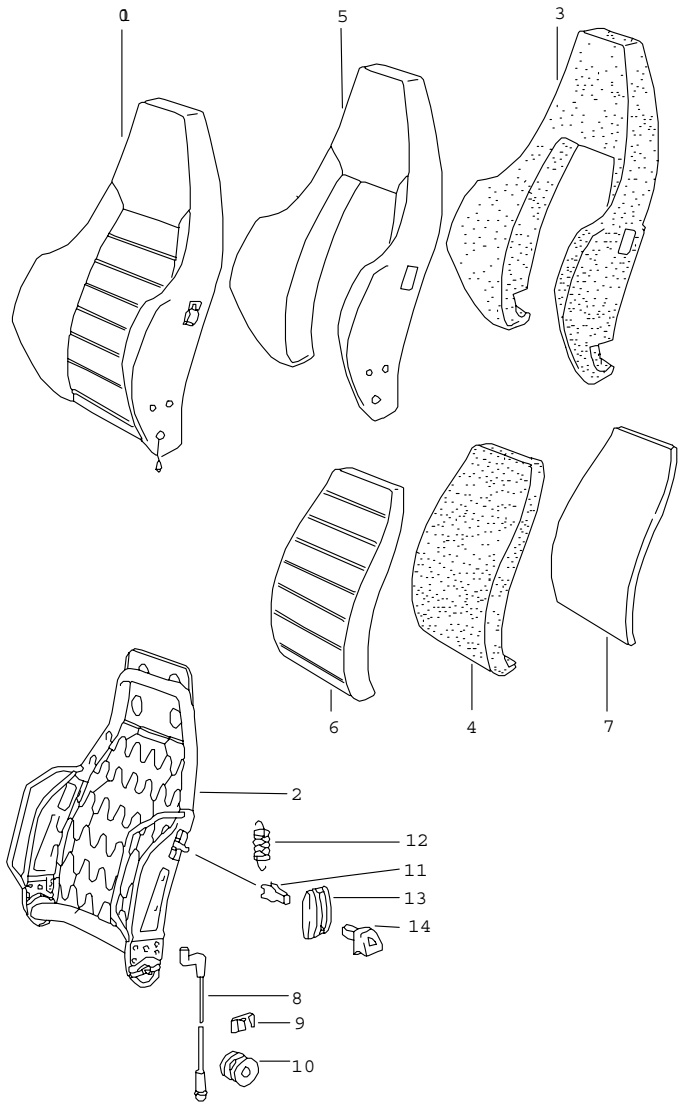

Pos	Part Number	Name	Remarks	Qty	Model
		sports seat backrest single parts	81-		
1	A 911 521 603 50	backrest leather	/L	1	
	1AJ	black	-82		
	3NG	brown	-82		
	30B	dark blue	-82		
	50B	beige			
	80S	can-can-red			
	95S	papyrus			
	60S	hannibal grey			
	20S	mint green			
	LG7	burgundy	83-		
	KZ4	grey-beige	83-		
	KZ2	black	83-		
	KZ3	blue	83-		
	KZ5	brown	83-		
(1)	A 911 521 604 50	backrest leather	/R	1	
	1AJ	black	-82		
	3NG	brown	-82		
	30B	dark blue	-82		
	50B	beige			
	80S	can-can-red			
	95S	papyrus			
	60S	hannibal grey			
	20S	mint green			
	LG7	burgundy	83-		
	KZ4	grey-beige	83-		
	KZ2	black	83-		

Pos	Part Number	Name	Remarks	Qty	Model
	KZ3	blue	83-		
	KZ5	brown	83-		
1	A 911 521 603 50	backrest leather/ piping	/L	1	
	6AD	russet doric grey			
(1)	A 911 521 604 50	backrest leather/ piping	/R	1	
	6AD	russet doric grey			
(1)	A 911 521 603 06	backrest leatherette/ backrest surface berber cloth	/L	1	
	GE9	black/ grey/black	-82		
	BD7	blue/ blue/black	-82		
	FE3	brown/ beige/brown	-82		
	BD9	beige/ beige/brown			
	LK8	burgundy/ burgundy-grey	83-		
	JM9	grey-beige/ grey-beige-grey	83-		
	JM3	black/ grey/black	83-		
	JM8	blue/ blue/black	83-		
	JM4	brown/ beige/brown	83-		
(1)	A 911 521 604 06	backrest leatherette/ backrest surface berber cloth	/R	1	
	GE9	black/ grey/black	-82		
	BD7	blue/ blue/black	-82		
	FE3	brown/ beige/brown	-82		
	BD9	beige/ beige/brown			
	LK8	burgundy/ burgundy-grey	83-		
	JM9	grey-beige/ grey-beige-grey	83-		
	JM3	black/ grey/black	83-		
	JM8	blue/ blue/black	83-		
	JM4	brown/ beige/brown	83-		
2	911 521 613 02	backrest frame	/L	1	
(2)	911 521 614 02	backrest frame	/R	1	
3	911 521 751 02	foam part backrest side part		2	
4	911 521 104 02	foam part backrest cushion		2	
5	A 911 521 072 70	backrest side part cover leather		2	
	1AJ	black	-82		
	3NG	brown	-82		
	30B	dark blue	-82		
	50B	beige			
	80S	can-can-red			
	95S	papyrus			
	60S	hannibal grey			
	20S	mint green			
	LG7	burgundy	83-		
	KZ4	grey-beige	83-		
	KZ2	black	83-		

Pos	Part Number	Name	Remarks	Qty	Model
	KZ3	blue	83-		
	KZ5	brown	83		
5	A 911 521 072 70	backrest side part cover leather/ piping		2	
	6AD	russet doric grey			
5	A 911 521 072 06	backrest side part cover leatherette/ backrest surface berber cloth		2	
	GE9	black/ grey/black	-82		
	BD7	blue/ blue/black	-82		
	FE3	brown/ beige/brown	-82		
	BD9	beige/ beige/brown			
	LK8	burgundy/ burgundy-grey	83-		
	JM9	grey-beige/ grey-beige-grey	83-		
	JM3	black/ grey/black	83-		
	JM8	blue/ blue/black	83-		
	JM4	brown/ beige/brown	83-		
6	A 911 521 403 50	backrest cushion cover leather		2	
	1AJ	black	-82		
	3NG	brown	-82		
	30B	dark blue	-82		
	50B	beige			
	80S	can-can-red			
	95S	papyrus			
	60S	hannibal grey			
	20S	mint green			
	LG7	burgundy	83-		
	KZ4	grey-beige	83-		
	KZ2	black	83-		
	KZ3	blue	83-		
	KZ5	brown	83		
6	A 911 521 403 50	backrest cushion cover leather/ piping		2	
	6AD	russet doric grey			
6	A 911 521 403 06	backrest cushion cover berber cloth		2	
	1GB	grey/black			
	37B	blue/black			
	8NB	beige/brown			
	6LB	burgundy-grey	83-		
	1FB	grey-beige-grey	83-		
7	911 521 575 00	cover		2	
8	911 521 361 00	cable		2	
9	911 521 369 00	terminal		2	
10	911 521 343 00	guide bush		2	
11	311 881 247	clamp		1	
12	311 881 287 A	spring		2	
13	911 521 815 00	rose		2	
	01C	satin black			
14	911 521 817 00	control button		2	
	01C	satin black			
		- -- E N D -- -			

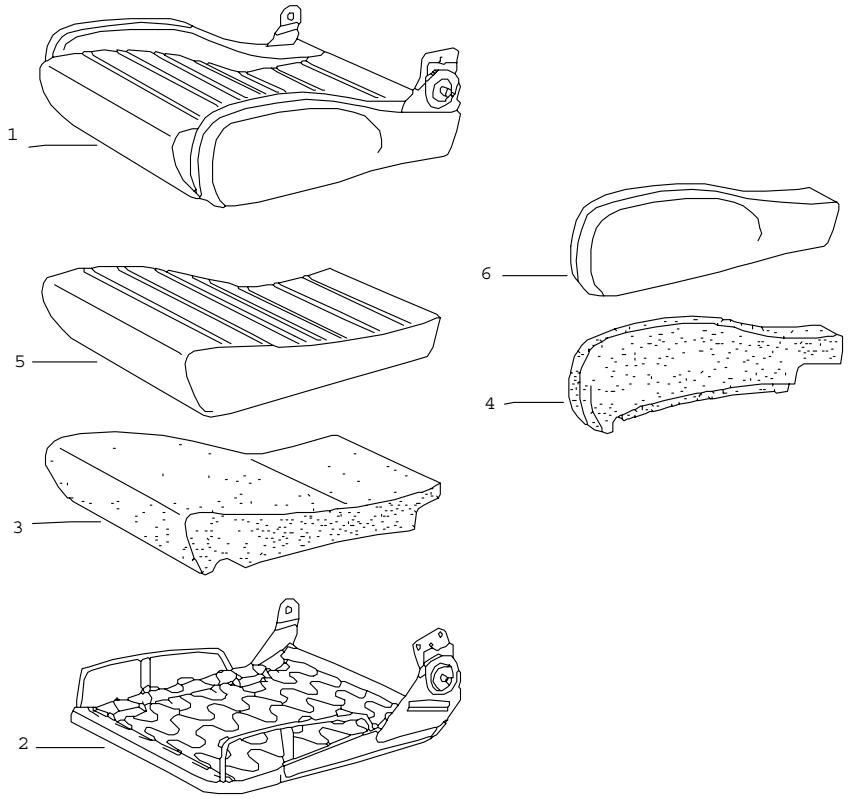

Pos	Part Number	Name	Remarks	Qty	Model
		sports seat seat cushion single parts	81-		
1	A 911 521 605 50	seat cushion leather	/L	1	
	1AJ	black	-82		
	3NG	brown	-82		
	30B	dark blue	-82		
	50B	beige			
	80S	can-can-red			
	95S	papyrus			
	60S	hannibal grey			
	20S	mint green			
	LG7	burgundy	83-		
	KZ4	grey-beige	83-		
	KZ2	black	83-		
	KZ3	blue	83-		
	KZ5	brown	83-		
(1)	A 911 521 606 50	seat cushion leather	/R	1	
	1AJ	black	-82		
	3NG	brown	-82		
	30B	dark blue	-82		
	50B	beige			
	80S	can-can-red			
	95S	papyrus			
	60S	hannibal grey			
	20S	mint green			
	LG7	burgundy	83-		
	KZ4	grey-beige	83-		
	KZ2	black	83-		

Pos	Part Number	Name	Remarks	Qty	Model
	KZ3	blue	83-		
	KZ5	brown	83-		
1	A 911 521 605 50	seat cushion leather/ piping	/L	1	
	6AD	russet doric grey			
(1)	A 911 521 606 50	seat cushion leather/ piping	/R	1	
	6AD	russet doric grey			
(1)	A 911 521 605 06	seat cushion leatherette/ seat surface berber cloth	/L	1	
	GE9	black/ grey/black	-82		
	BD7	blue/ blue/black	-82		
	FE3	brown/ beige/brown	-82		
	BD9	beige/ beige/brown			
	LK8	burgundy/ burgundy-grey	83-		
	JM9	grey-beige/ grey-beige-grey	83-		
	JM3	black/ grey/black	83-		
	JM8	blue/ blue/black	83-		
	JM4	brown/ beige/brown	83-		
(1)	A 911 521 606 06	seat cushion leatherette/ seat surface berber cloth	/R	1	
	GE9	black/ grey/black	-82		
	BD7	blue/ blue/black	-82		
	FE3	brown/ beige/brown	-82		
	BD9	beige/ beige/brown			
	LK8	burgundy/ burgundy-grey	83-		
	JM9	grey-beige/ grey-beige-grey	83-		
	JM3	black/ grey/black	83-		
	JM8	blue/ blue/black	83-		
	JM4	brown/ beige/brown	83-		
2	911 521 621 01	seat frame	/L	1	
(2)	911 521 622 01	seat frame	/R	1	
3	911 521 697 02	foam part seat cushion		2	
4	911 521 683 02	foam part cushion left seat	/L	1	
(4)	911 521 654 02	foam part cushion left seat	/R	1	
(4)	911 521 653 02	foam part cushion right seat	/L	1	
(4)	911 521 684 02	foam part cushion right seat	/R	1	
5	A 911 521 439 50	cover for cushion leather		2	
	1AJ	black	-82		
	3NG	brown	-82		
	30B	dark blue	-82		
	50B	beige			

Pos	Part Number	Name	Remarks	Qty	Model
	80S	can-can-red			
	95S	papyrus			
	60S	hannibal grey			
	20S	mint green			
	LG7	burgundy	83-		
	KZ4	grey-beige	83-		
	KZ2	black	83-		
	KZ3	blue	83-		
	KZ5	brown	83-		
5	A 911 521 439 50	cover for cushion leather/ piping		2	
	6AD	russet doric grey			
5	A 911 521 439 06	cover for cushion leatherette/ seat surface berber cloth		2	
	1GB	grey/black			
	37B	blue/black			
	8NB	beige/brown			
	6LB	burgundy-grey	83-		
	1FB	grey-beige-grey	83-		
6	A 911 521 631 50	seat side part cover left seat leather	/L	1	
	1AJ	black	-82		
	3NG	brown	-82		
	30B	dark blue	-82		
	50B	beige			
	95S	papyrus			
	80S	can-can-red			
	60S	hannibal grey			
	20S	mint green			
	LG7	burgundy	83-		
	KZ4	grey-beige	83-		
	KZ2	black	83-		
	KZ3	blue	83-		
	KZ5	brown	83		
(6)	A 911 521 632 50	seat side part cover left seat leather	/R	1	
	1AJ	black	-82		
	3NG	brown	-82		
	30B	dark blue	-82		
	50B	beige			
	95S	papyrus			
	80S	can-can-red			
	60S	hannibal grey			
	20S	mint green			
	LG7	burgundy	83-		
	KZ4	grey-beige	83-		
	KZ2	black	83-		
	KZ3	blue	83-		
	KZ5	brown	83		
(6)	A 911 521 633 50	seat side part cover right seat leather	/L	1	
	1AJ	black	-82		
	3NG	brown	-82		
	30B	dark blue	-82		
	50B	beige			
	95S	papyrus			
	80S	can-can-red			

Pos	Part Number	Name	Remarks	Qty	Model
	60S	hannibal grey			
	20S	mint green			
	LG7	burgundy	83-		
	KZ4	grey-beige	83-		
	KZ2	black	83-		
	KZ3	blue	83-		
	KZ5	brown	83		
(6)	A 911 521 634 50	seat side part cover right seat leather	/R	1	
	1AJ	black	-82		
	3NG	brown	-82		
	30B	dark blue	-82		
	50B	beige			
	95S	papyrus			
	80S	can-can-red			
	60S	hannibal grey			
	20S	mint green			
	LG7	burgundy	83-		
	KZ4	grey-beige	83-		
	KZ2	black	83-		
	KZ3	blue	83-		
	KZ5	brown	83		
6	A 911 521 631 50	seat side part cover left seat leather/ piping	/L	1	
	6AD	russet doric grey			
(6)	A 911 521 632 50	seat side part cover left seat leather/ piping	/R	1	
	6AD	russet doric grey			
(6)	A 911 521 633 50	seat side part cover right seat leather/ piping	/L	1	
	6AD	russet doric grey			
(6)	A 911 521 634 50	seat side part cover right seat leather/ piping	/R	1	
	6AD	russet doric grey			
(6)	A 911 521 631 06	seat side part cover left seat leatherette/ seat surface berber cloth	/L	1	
	JM3	black/ grey/black	-82		
	BD9	beige/ beige/brown			
	LK8	burgundy/ burgundy-grey	83-		
	JM9	grey-beige/ grey-beige-grey	83-		
	JM3	black/ grey/black			
	JM8	blue/ blue/black			
	JM4	brown/ beige/brown			
(6)	A 911 521 632 06	seat side part cover left seat leatherette/ seat surface berber cloth	/R	1	
	JM3	black/ grey/black	-82		
	BD9	beige/ beige/brown			

Pos	Part Number	Name	Remarks	Qty	Model
	LK8	burgundy/ burgundy-grey	83-		
	JM9	grey-beige/ grey-beige-grey	83-		
	JM3	black/ grey/black			
	JM8	blue/ blue/black			
	JM4	brown/ beige/brown			
(6)	A 911 521 633 06	seat side part cover right seat leatherette/ seat surface berber cloth	/L	1	
	JM3	black/ grey/black	-82		
	BD9	beige/ beige/brown			
	LK8	burgundy/ burgundy-grey	83-		
	JM9	grey-beige/ grey-beige-grey	83-		
	JM3	black/ grey/black			
	JM8	blue/ blue/black			
	JM4	brown/ beige/brown			
(6)	A 911 521 634 06	seat side part cover right seat leatherette/ seat surface berber cloth	/R	1	
	JM3	black/ grey/black	-82		
	BD9	beige/ beige/brown			
	LK8	burgundy/ burgundy-grey	83-		
	JM9	grey-beige/ grey-beige-grey	83-		
	JM3	black/ grey/black			
	JM8	blue/ blue/black			
	JM4	brown/ beige/brown			

- -- E N D -- -

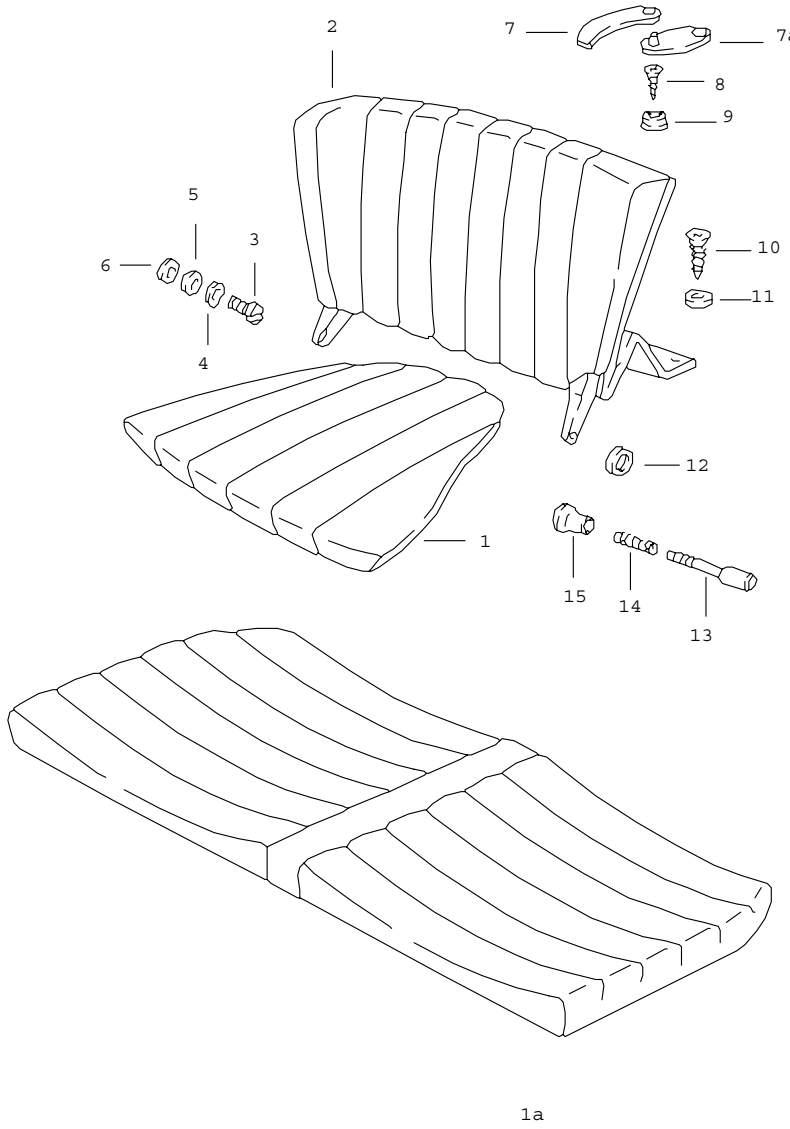

Pos	Part Number	Name	Remarks	Qty	Model
		back seat cushion back seat backrest back seat backrest see group 8 / 07 / 07	83		COUPE/TARGA CABRIO
1	911 522 051 06	back seat cushion leatherette	/L	1	SC
	3MK	burgundy	83-		
	4FK	grey-beige	83-		
	43S	black	83-		
	1HH	blue	83-		
	4RB	brown	83-		
(1)	911 522 052 06	back seat cushion leatherette	/R	1	SC
	3MK	burgundy	83-		
	4FK	grey-beige	83-		
	43S	black	83-		
	1HH	blue	83-		
	4RB	brown	83-		
1	930 522 051 74	back seat cushion leather	/L	1	
	3NG	brown			
	1AJ	black	80-		
	30B	dark blue	80-		
	50B	beige	80-		
	95S	papyrus	81-		
	60S	hannibal grey	81-		
	20S	mint green	81-		
	LG7	burgundy	83-		
	KZ4	grey-beige	83-		
	KZ6	can-can-red	83-		
	LG4	pearl white	83-		
	LG5	champagne	83-		

Pos	Part Number	Name	Remarks	Qty	Model
	LG6	dark green	83-		
(1)	930 522 052 74	back seat cushion leather	/R	1	
	3NG	brown			
	1AJ	black	80-		
	30B	dark blue	80-		
	50B	beige	80-		
	95S	papyrus	81-		
	60S	hannibal grey	81-		
	20S	mint green	81-		
	LG7	burgundy	83-		
	KZ4	grey-beige	83-		
	KZ6	can-can-red	83-		
	LG4	pearl white	83-		
	LG5	champagne	83-		
	LG6	dark green	83-		
1	930 522 051 74	back seat cushion leather/ piping	/L	1	
	6AD	russet doric grey			
(1)	930 522 052 74	back seat cushion leather/ piping	/R	1	
	6AD	russet doric grey			
1	930 522 051 01	back seat cushion pin stripe velour	/L	1	
	8AK	lobster			
	5AK	cork			
	7AK	black			
(1)	930 522 052 01	back seat cushion pin stripe velour	/R	1	
	8AK	lobster			
	5AK	cork			
	7AK	black			
1	930 522 051 01	back seat cushion tartan cloth	/L	1	
	8AB	red/blue/black			
	2AC	green/blue/black			
	4AD	brown/white/beige			
(1)	930 522 052 01	back seat cushion tartan cloth	/R	1	
	8AB	red/blue/black			
	2AC	green/blue/black			
	4AD	brown/white/beige			
1	930 522 051 01	back seat cushion checker board velour	/L	1	
	37A	blue/black			
	47A	brown/black			
	67A	grey/black			
	54A	beige/brown			
	LD5	light grey-black	83-		
	LJ8	blue-grey	83-		
	LD6	brown-grey	83-		
	LJ9	burgundy-grey	83-		
(1)	930 522 052 01	back seat cushion checker board velour	/R	1	
	37A	blue/black			
	47A	brown/black			
	67A	grey/black			
	54A	beige/brown			
	LD5	light grey-black	83-		
	LJ8	blue-grey	83-		
	LD6	brown-grey	83-		

Pos	Part Number	Name	Remarks	Qty	Model
	LJ9	burgundy-grey	83-		
1	930 522 051 01	back seat cushion uni-coloured cloth	/L	1	
	40C	brown			
	50C	beige			
	LK3	brown	83-		
	LK5	burgundy	83-		
	LK6	grey-beige	83-		
	JM2	black	83-		
	JM5	blue	83-		
(1)	930 522 052 01	back seat cushion uni-coloured cloth	/R	1	
	40C	brown			
	50C	beige			
	LK3	brown	83-		
	LK5	burgundy	83-		
	LK6	grey-beige	83-		
	JM2	black	83-		
	JM5	blue	83-		
1	930 522 051 01	back seat cushion berber cloth	/L	1	
	LK8	burgundy-grey	83-		
	JM9	grey-beige-grey	83-		
	JM3	grey/black	83-		
	JM8	blue/black	83-		
	JM4	beige/brown	83-		
(1)	930 522 052 01	back seat cushion berber cloth	/R	1	
	LK8	burgundy-grey	83-		
	JM9	grey-beige-grey	83-		
	JM3	grey/black	83-		
	JM8	blue/black	83-		
	JM4	beige/brown	83-		
1	930 522 051 01	back seat cushion stripe design	/L	1	M 403
	9LA	grey-burgundy			
(1)	930 522 052 01	back seat cushion stripe design	/R	1	M 403
	9LA	grey-burgundy			
1A	911 522 050 00	back seat cushion leatherette		1	SC:(J)
	8AU	lobster	-78		
	5AU	cork			
	7AU	black	79-82		
	4AU	brown	79-82		
	3AU	dark blue	80-82		
	5BC	beige	80-82		
	3MK	burgundy	83-		
	4FK	grey-beige	83-		
	43S	black	83-		
	1HH	blue	83-		
	4RB	brown	83-		
1A	911 522 050 70	back seat cushion leather		1	(J)
	8AH	lobster	-78		
	5AH	cork	-79		
	7AG	black	-79		
	20B	dark green			
	2AP	light green	-78		
	3NG	brown	-82		
	3AG	blue	-79		
	8AT	light red	-79		

Pos	Part Number	Name	Remarks	Qty	Model
	1AG	yellow	-79		
	9AG	white	-79		
	1AJ	black	80-82		
	30B	dark blue	80-82		
	50B	beige	80-		
	40D	cork	80		
	30A	blue	80		
	80B	light red	80		
	10A	yellow	80		
	99A	white	80		
	80S	can-can-red	81-		
	95S	papyrus	81-		
	60S	hannibal grey	81-		
	20S	mint green	81-		
	LG7	burgundy	83-		
	KZ4	grey-beige	83-		
	KZ2	black	83-		
	KZ3	blue	83-		
	KZ5	brown	83-		
	KZ6	can-can-red	83-		
	LG4	pearl white	83-		
	LG5	champagne	83-		
	LG6	dark green	83-		
2	A 911 522 005 26	back seat backrest leatherette/ carpet cut pile	/L 79-	1	SC
	8AU	lobster			
	7AU	black	-82		
	4AU	brown	-82		
	3AU	dark blue	-82		
	5BC	beige	80-82		
	5AU	cork			
	3MK	burgundy	83-		
	4FK	grey-beige	83-		
	43S	black	83-		
	1HH	blue	83-		
	4RB	brown	83-		
2	911 522 017 00	back seat backrest leatherette/ carpet cut pile	/L	1	
	8AU	lobster			
	5AU	cork			
	3MK	burgundy	83-		
	4FK	grey-beige	83-		
	43S	black	83-		
	1HH	blue	83-		
	4RB	brown	83-		
2	A 911 522 006 26	back seat backrest leatherette/ carpet cut pile	/R 79-	1	SC
	8AU	lobster			
	7AU	black	-82		
	4AU	brown	-82		
	3AU	dark blue	-82		
	5BC	beige	80-82		
	5AU	cork			
	3MK	burgundy	83-		
	4FK	grey-beige	83-		
	43S	black	83-		
	1HH	blue	83-		

Pos	Part Number	Name	Remarks	Qty	Model
	4RB	brown	83-		
2	911 522 018 00	back seat backrest leatherette/ carpet cut pile	/R	1	
	8AU	lobster			
	5AU	cork			
	3MK	burgundy	83-		
	4FK	grey-beige	83-		
	43S	black	83-		
	1HH	blue	83-		
	4RB	brown	83-		
(2)	A 911 522 005 28	back seat backrest leatherette/ centre part tartan cloth	/L 80- 80	1	SC
	8ZZ	black/ red/blue/black			
	8ZE	dark blue/ red/blue/black			
	2ZZ	black/ green/blue/black			
	2ZE	dark blue/ green/blue/black			
	4ZZ	black/ brown/white/beige			
	4ZS	brown/ brown/white/beige			
	4ZH	beige/ brown/white/beige			
(2)	A 911 522 006 28	back seat backrest leatherette/ centre part tartan cloth	/R 80- 80	1	SC
	8ZZ	black/ red/blue/black			
	8ZE	dark blue/ red/blue/black			
	2ZZ	black/ green/blue/black			
	2ZE	dark blue/ green/blue/black			
	4ZZ	black/ brown/white/beige			
	4ZS	brown/ brown/white/beige			
	4ZH	beige/ brown/white/beige			
(2)	911 522 017 01	back seat backrest leatherette/ centre part tartan cloth	/L 80	1	
	8ZZ	black/ red/blue/black			
	8ZE	dark blue/ red/blue/black			
	2ZZ	black/ green/blue/black			
	2ZE	dark blue/ green/blue/black			
	4ZZ	black/ brown/white/beige			
	4ZS	brown/ brown/white/beige			
	4ZH	beige/ brown/white/beige			
(2)	911 522 018 01	back seat backrest leatherette/ centre part tartan cloth	/R 80	1	
	8ZZ	black/ red/blue/black			
	8ZE	dark blue/ red/blue/black			
	2ZZ	black/ green/blue/black			
	2ZE	dark blue/ green/blue/black			

Pos	Part Number	Name	Remarks	Qty	Model
	4ZZ	black/ brown/white/beige			
	4ZS	brown/ brown/white/beige			
	4ZH	beige/ brown/white/beige			
(2)	A 911 522 005 28	back seat backrest leatherette/ centre part checker board velour	/L 80-	1	SC
	3ZP	black/ blue/black			
	BC1	dark blue/ blue/black			
	4ZP	black/ brown/black			
	4ZM	brown/ brown/black			
	4ZG	beige/ brown/black			
	FD8	black/ grey/black			
	FD9	brown/ beige/brown			
	BC4	beige/ beige/brown			
	LD5	black/ light grey-black	83-		
	LJ8	blue/ blue-grey	83-		
	LD6	brown/ brown-grey	83-		
	LJ9	burgundy/ burgundy-grey	83-		
	LK1	grey-beige/ light grey-black	83-		
(2)	A 911 522 006 28	back seat backrest leatherette/ centre part checker board velour	/R 80-	1	SC
	3ZP	black/ blue/black			
	BC1	dark blue/ blue/black			
	4ZP	black/ brown/black			
	4ZM	brown/ brown/black			
	4ZG	beige/ brown/black			
	FD8	black/ grey/black			
	FD9	brown/ beige/brown			
	BC4	beige/ beige/brown			
	LD5	black/ light grey-black	83-		
	LJ8	blue/ blue-grey	83-		
	LD6	brown/ brown-grey	83-		
	LJ9	burgundy/ burgundy-grey	83-		
	LK1	grey-beige/ light grey-black	83-		
(2)	911 522 017 01	back seat backrest leatherette/ centre part checker board velour	/L	1	
	3ZP	black/ blue/black			
	BC1	dark blue/ blue/black			
	4ZP	black/ brown/black			
	4ZM	brown/ brown/black			
	4ZG	beige/ brown/black			

Pos	Part Number	Name	Remarks	Qty	Model
	FD8	black/ grey/black			
	FD9	brown/ beige/brown			
	BC4	beige/ beige/brown			
	LD5	black/ light grey-black	83-		
	LJ8	blue/ blue-grey	83-		
	LD6	brown/ brown-grey	83-		
	LJ9	burgundy/ burgundy-grey	83-		
	LK1	grey-beige/ light grey-black	83-		
(2)	911 522 018 01	back seat backrest leatherette/ centre part checker board velour	/R	1	
	3ZP	black/ blue/black			
	BC1	dark blue/ blue/black			
	4ZP	black/ brown/black			
	4ZM	brown/ brown/black			
	4ZG	beige/ brown/black			
	FD8	black/ grey/black			
	FD9	brown/ beige/brown			
	BC4	beige/ beige/brown			
	LD5	black/ light grey-black	83-		
	LJ8	blue/ blue-grey	83-		
	LD6	brown/ brown-grey	83-		
	LJ9	burgundy/ burgundy-grey	83-		
	LK1	grey-beige/ light grey-black	83-		
(2)	A 911 522 005 28	back seat backrest leatherette/ centre part uni-coloured cloth	/L 80-	1	SC
	BD4	black/black	-82		
	4ZK	brown/brown	-82		
	BD1	dark blue/blue	-82		
	BD3	beige/beige			
	BD5	brown/beige			
	LK3	brown-brown	83-		
	LK5	burgundy-burgundy	83-		
	LK6	grey-beige/grey-beige	83-		
	JM2	black-black	83-		
	JM5	blue/blue	83-		
(2)	A 911 522 006 28	back seat backrest leatherette/ centre part uni-coloured cloth	/R 80-	1	SC
	BD4	black/black	-82		
	4ZK	brown/brown	-82		
	BD1	dark blue/blue	-82		
	BD3	beige/beige			
	BD5	brown/beige			
	LK3	brown-brown	83-		
	LK5	burgundy-burgundy	83-		
	LK6	grey-beige/grey-beige	83-		
	JM2	black-black	83-		
	JM5	blue/blue	83-		

Pos	Part Number	Name	Remarks	Qty	Model
(2)	911 522 017 01	back seat backrest leatherette/ centre part uni-coloured cloth	/L	1	
	BD3	beige/beige			
	BD5	brown/beige			
	LK3	brown-brown	83-		
	LK5	burgundy-burgundy	83-		
	LK6	grey-beige/grey-beige	83-		
	JM2	black-black	83-		
	JM5	blue/blue	83-		
(2)	911 522 018 01	back seat backrest leatherette/ centre part uni-coloured cloth	/R	1	
	BD3	beige/beige			
	BD5	brown/beige			
	LK3	brown-brown	83-		
	LK5	burgundy-burgundy	83-		
	LK6	grey-beige/grey-beige	83-		
	JM2	black-black	83-		
	JM5	blue/blue	83-		
(2)	A 911 522 005 30	back seat backrest leatherette/ backrest surface berber cloth carpet cut pile	/L 80-	1	SC
	GE9	black/ grey/black	-82		
	BD7	dark blue/ blue/black	-82		
	FE3	brown/ beige/brown	-82		
	BD9	beige/ beige/brown			
	LK8	burgundy/ burgundy-grey	83-		
	JM9	grey-beige/ grey-beige-grey	83-		
	JM3	black/ grey/black	83-		
	JM8	blue/ blue/black	83-		
	JM4	brown/ beige/brown	83-		
(2)	A 911 522 006 30	back seat backrest leatherette/ backrest surface berber cloth carpet cut pile	/R 80-	1	SC
	GE9	black/ grey/black	-82		
	BD7	dark blue/ blue/black	-82		
	FE3	brown/ beige/brown	-82		
	BD9	beige/ beige/brown			
	LK8	burgundy/ burgundy-grey	83-		
	JM9	grey-beige/ grey-beige-grey	83-		
	JM3	black/ grey/black	83-		
	JM8	blue/ blue/black	83-		
	JM4	brown/ beige/brown	83-		
(2)	911 522 017 02	back seat backrest leatherette/ backrest surface berber cloth carpet cut pile	/L	1	
	BD9	beige/ beige/brown			

Pos	Part Number	Name	Remarks	Qty	Model
	LK8	burgundy/ burgundy-grey	83-		
	JM9	grey-beige/ grey-beige-grey	83-		
	JM3	black/ grey/black	83-		
	JM8	blue/ blue/black	83-		
	JM4	brown/ beige/brown	83-		
(2)	911 522 018 02	back seat backrest leatherette/ backrest surface berber cloth carpet cut pile	/R	1	
	BD9	beige/ beige/brown			
	LK8	burgundy/ burgundy-grey	83-		
	JM9	grey-beige/ grey-beige-grey	83-		
	JM3	black/ grey/black	83-		
	JM8	blue/ blue/black	83-		
	JM4	brown/ beige/brown	83-		
(2)	A 911 522 005 81	back seat backrest leather/ carpet cut pile	/L 79-	1	SC
	7AG	black	-79		
	20B	dark green	-82		
	3NG	brown	-82		
	3AG	blue	-79		
	8AT	light red	-79		
	1AG	yellow	-79		
	9AG	white	-79		

Pos	Part Number	Name	Remarks	Qty	Model
	5AH	cork	-79		
	1AJ	black	80-82		
	30B	dark blue	80-82		
	50B	beige	80-82		
	40D	cork	80		
	30A	blue	80		
	80B	light red	80		
	10A	yellow	80		
	99A	white	80		
	80S	can-can-red	81-82		
	95S	papyrus	81-		
	60S	hannibal grey	81-		
	20S	mint green	81-		
	LG7	burgundy	83-		
	KZ4	grey-beige	83-		
	KZ2	black	83-		
	KZ3	blue	83-		
	KZ5	brown	83-		
	KZ6	can-can-red	83-		
	LG4	pearl white	83-		
	LG5	champagne	83-		
	LG6	dark green	83-		
(2)	A 911 522 006 81	back seat backrest leather/ carpet cut pile	/R 79-	1	
	7AG	black	-79		
	20B	dark green	-82		
	3NG	brown	-82		
	3AG	blue	-79		
	8AT	light red	-79		

Pos	Part Number	Name	Remarks	Qty	Model
	1AG	yellow	-79		
	9AG	white	-79		
	5AH	cork	-79		
	1AJ	black	80-82		
	30B	dark blue	80-82		
	50B	beige	80-82		
	40D	cork	80		
	30A	blue	80		
	80B	light red	80		
	10A	yellow	80		
	99A	white	80		
	80S	can-can-red	81-82		
	95S	papyrus	81-		
	60S	hannibal grey	81-		
	20S	mint green	81-		
	LG7	burgundy	83-		
	KZ4	grey-beige	83-		
	KZ2	black	83-		
	KZ3	blue	83-		
	KZ5	brown	83-		
	KZ6	can-can-red	83-		
	LG4	pearl white	83-		
	LG5	champagne	83-		
	LG6	dark green	83-		
(2)	911 522 017 03	back seat backrest leather/ carpet cut pile	/L	1	
	95S	papyrus	81-		
	60S	hannibal grey	81-		
	20S	mint green	81-		
	LG7	burgundy	83-		
	KZ4	grey-beige	83-		
	KZ2	black	83-		
	KZ3	blue	83-		
	KZ5	brown	83-		
	KZ6	can-can-red	83-		
	LG4	pearl white	83-		
	LG5	champagne	83-		
	LG6	dark green	83-		
(2)	911 522 018 03	back seat backrest leather/ carpet cut pile	/R	1	
	95S	papyrus	81-		
	60S	hannibal grey	81-		
	20S	mint green	81-		
	LG7	burgundy	83-		
	KZ4	grey-beige	83-		
	KZ2	black	83-		
	KZ3	blue	83-		
	KZ5	brown	83-		
	KZ6	can-can-red	83-		
	LG4	pearl white	83-		
	LG5	champagne	83-		
	LG6	dark green	83-		
(2)	A 911 522 005 81	back seat backrest leather/ piping	/L 79-	1	SC
	6AD	russet doric grey			
(2)	911 522 017 03	back seat backrest leather/ piping	/L	1	

Pos	Part Number	Name	Remarks	Qty	Model
	6AD	russet doric grey			
(2)	911 522 006 81	back seat backrest leather/ piping	/R 79-	1	
	6AD	russet doric grey			
(2)	A 930 522 005 74	back seat backrest leather/ carpet cut pile with logo	/L 79-	1	TURBO
	5AH	cork	-79		
	7AG	black	-79		
	20B	dark green	-80		
	3NG	brown	-82		
	3AG	blue	-79		
	8AT	light red	-79		
	1AG	yellow	-79		
	9AG	white	-79		
	30B	dark blue	80-82		
	50B	beige	80-82		
	1AJ	black	80-82		
	40D	cork	80		
	30A	blue	80		
	80B	light red	80		
	10A	yellow	80		
	99A	white	80		
	80S	can-can-red	81-82		
	95S	papyrus	81-82		
	60S	hannibal grey	81-82		
	20S	mint green	81-82		
	LG7	burgundy	83-		
	KZ3	blue	83-		
	KZ4	grey-beige	83-		
	KZ5	brown	83-		
	KZ6	can-can-red	83-		
	LG4	pearl white	83-		
	LG5	champagne	83-		
	LG6	dark green	83-		
	KZ2	black	83-		
(2)	911 522 005 83	back seat backrest leather/ centre part checker board velour	/L 80-	1	SC
	AJ1	dark blue/ blue/black			
	AJ2	black/ grey/black			
	AJ3	brown/ beige/brown			
	AJ4	beige/ beige/brown			
	LH1	black/ light grey-black	83-		
	LH3	blue/ blue-grey	83-		
	LH2	brown/ brown-grey	83-		
	LH4	burgundy/ burgundy-grey	83-		
	LH6	grey-beige/ light grey-black	83-		
(2)	930 522 005 76	back seat backrest leather/ centre part checker board velour	/L 80-	1	TURBO
	AJ1	dark blue/ blue/black			
	AJ2	black/ grey/black			

Pos	Part Number	Name	Remarks	Qty	Model
	AJ3	brown/ beige/brown			
	AJ4	beige/ beige/brown			
	LH1	black/ light grey-black	83-		
	LH3	blue/ blue-grey	83-		
	LH2	brown/ brown-grey	83-		
	LH4	burgundy/ burgundy-grey	83-		
	LH6	grey-beige/ light grey-black	83-		
(2)	911 522 006 83	back seat backrest leather/ centre part checker board velour	/R 80-	1	
	AJ1	dark blue/ blue/black			
	AJ2	black/ grey/black			
	AJ3	brown/ beige/brown			
	AJ4	beige/ beige/brown			
	LH1	black/ light grey-black	83-		
	LH3	blue/ blue-grey	83-		
	LH2	brown/ brown-grey	83-		
	LH4	burgundy/ burgundy-grey	83-		
	LH6	grey-beige/ light grey-black	83-		
(2)	911 522 005 83	back seat backrest leather/ centre part uni-coloured cloth	/L 80-	1	SC
	AK1	dark blue/blue	-82		
	AK5	brown/beige			
	AK3	beige/beige			
	AK4	black/black	-82		
	LJ1	brown-brown	83-		
	LJ2	burgundy-burgundy	83-		
	LJ3	grey-beige/grey-beige	83-		
	JN6	black-black	83-		
	JT4	blue/blue	83-		
(2)	930 522 005 76	back seat backrest leather/ centre part uni-coloured cloth	/L 80-	1	TURBO
	AK1	dark blue/blue	-82		
	AK5	brown/beige			
	AK3	beige/beige			
	AK4	black/black	-82		
	LJ1	brown-brown	83-		
	LJ2	burgundy-burgundy	83-		
	LJ3	grey-beige/grey-beige	83-		
	JN6	black-black	83-		
	JT4	blue/blue	83-		
(2)	911 522 006 83	back seat backrest leather/ centre part uni-coloured cloth	/R 80-	1	
	AK1	dark blue/blue	-82		
	AK5	brown/beige			
	AK3	beige/beige			
	AK4	black/black	-82		
	LJ1	brown-brown	83-		
	LJ2	burgundy-burgundy	83-		

Pos	Part Number	Name	Remarks	Qty	Model
	LJ3	grey-beige/grey-beige	83-		
	JN6	black-black	83-		
	JT4	blue/blue	83-		
(2)	911 522 005 83	back seat backrest leather/ centre part stripe design	/L 80-	1	SC M 403
	HS6	burgundy/ grey-burgundy			
(2)	930 522 005 76	back seat backrest leather/ centre part stripe design	/L 80-	1	TURBO M 403
	HS6	burgundy/ grey-burgundy			
(2)	911 522 006 83	back seat backrest leather/ centre part stripe design	/R 80-	1	 M 403
	HS6	burgundy/ grey-burgundy			
(2)	911 522 005 85	back seat backrest leather/ backrest surface berber cloth carpet cut pile	/L 80-	1	SC
	AK6	black/ grey/black	-82		
	AK7	dark blue/ blue/black	-82		
	AK8	brown/ beige/brown	-82		
	AK9	beige/ beige/brown			
	LH8	burgundy/ burgundy-grey	83-		
	LH9	grey-beige/ grey-beige-grey	83-		
	JH1	black/ grey/black	83-		
	JD4	blue/ blue/black	83-		
	JH2	brown/ beige/brown	83-		
(2)	930 522 005 78	back seat backrest leather/ backrest surface berber cloth carpet cut pile	/L 80-	1	TURBO
	AK6	black/ grey/black	-82		
	AK7	dark blue/ blue/black	-82		
	AK8	brown/ beige/brown	-82		
	AK9	beige/ beige/brown			
	LH8	burgundy/ burgundy-grey	83-		
	LH9	grey-beige/ grey-beige-grey	83-		
	JH1	black/ grey/black	83-		
	JD4	blue/ blue/black	83-		
	JH2	brown/ beige/brown	83-		
(2)	911 522 006 85	back seat backrest leather/ backrest surface berber cloth carpet cut pile	/R	1	
	AK9	beige/ beige/brown			
	LH8	burgundy/ burgundy-grey	83-		
	LH9	grey-beige/ grey-beige-grey	83-		
	JH1	black/ grey/black	83-		

Pos	Part Number	Name	Remarks	Qty	Model
	JD4	blue/ blue/black	83-		
	JH2	brown/ beige/brown	83-		
3	900 236 001 07	oval-head screw M 8 X 10		2	
4	N 012 230 1	spring washer B 10		2	
5	901 522 509 20	bearing sleeve		2	
6	911 559 435 00	spacer		X	
7	901 522 063 40	retaining belt		2	
(7)	911 645 039 00	retaining belt stereo rear loudspeaker		2	
7A	911 645 037 00	retaining belt extension stereo rear loudspeaker		2	
-	999 591 802 17	cap		2	
8	900 143 004 00	oval-head sheetmetal screw B 3,5 X 19		2	
9	999 591 805 12	push button		2	
10	900 145 041 07	tapping screw B 3,5 X 16		2	
11	999 591 102 17	washer A 3,5		4	
12	901 522 365 20	cap		2	
		- -- E N D -- -			

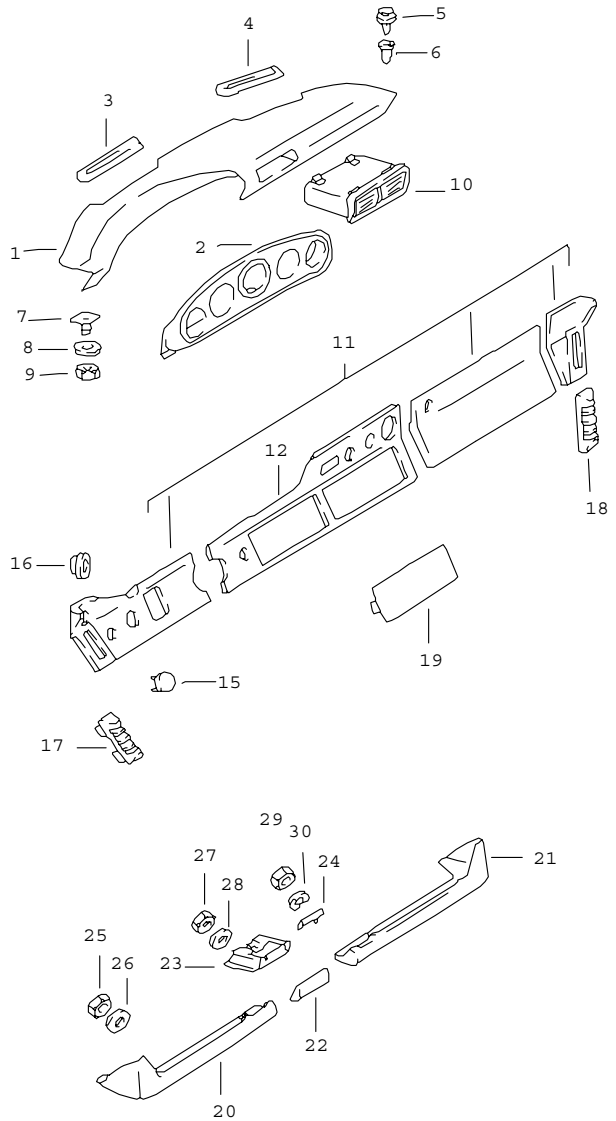

Pos	Part Number	Name	Remarks	Qty	Model
		dashboard with installation parts			
1	A 911 552 055 02	dashboard trim leatherette	/LL	1	SC
	7AE	black			
	8AE	lobster	-78		
	5AE	cork			
	21S	brown	79-82		
	30B	dark blue	80-		
	3MX	burgundy	83-		
	4RB	brown	83-		
1	911 552 055 04	dashboard trim leatherette	/LL	1	SC
	7AE	black			
	8AE	lobster	-78		
	5AE	cork			
	21S	brown	79-82		
	30B	dark blue	80-		
	3MX	burgundy	83-		
	4RB	brown	83-		
1	911 552 055 71	dashboard trim leather	/LL	1	
	7AG	black	-79		
	8AH	lobster	-78		
	5AH	cork	-79		
	20B	dark green	-82		
	3NG	dark brown	-82		
	3AG	blue	-79		
	8AT	light red	-79		
	1AJ	black	80-82		
	30B	dark blue	80-82		

Pos	Part Number	Name	Remarks	Qty	Model
	30A	blue	80		
	40D	cork	80		
	60S	hannibal grey	81-		
	20S	mint green	81-		
	6AD	doric grey	80		
	2LB	burgundy			M 403
	LG7	burgundy	83-		
	LG6	dark green	83-		
	KZ2	black	83-		
	KZ3	blue	83-		
	KZ5	brown	83-		
2	A 911 552 549 00	cover	/LL	1	
2	911 552 549 00	cover covering for instruments	/LL	1	
	700	black			
3	911 552 409 00	cover	/L	1	
4	911 552 410 00	cover heating nozzle	/R	1	
5	999 591 310 40	fixing clip		7	
6	999 591 311 40	bush		7	
7	999 591 344 02	latch		2	
8	N 011 524 7	washer A 6,4		7	
9	999 090 003 02	lock nut M 6		7	
(10)	911 571 067 02	centre nozzle		1	
(10)	911 571 067 03	centre nozzle		1	M 559
-	911 571 181 01	gasket centre nozzle		2	M 399/559
(11)	911 552 041 10	cover	/LL	1	
12	911 552 479 09	cover	/LL	1	

Pos	Part Number	Name	Remarks	Qty	Model
	7AE	black centre			
16	911 552 217 00	rose lid-release cable		1	
17	911 552 071 00	side vent	/L	1	
18	911 552 072 00	side vent	/R	1	
(19)	911 552 463 02	trim radio		1	
20	901 552 035 27	knee protection strip leatherette	/L	1	SC
	7AE	black			
	8AE	lobster	-78		
	5AE	cork			
	21S	brown	79-82		
	30B	dark blue	80-82		
	3MX	burgundy	83-		
	4RB	brown	83-		
20	901 552 035 70	knee protection strip leather	/L	1	
	7AG	black	-79		
	8AH	lobster	-78		
	5AH	cork	-79		
	20B	dark green			
	3NG	dark brown			
	3AG	blue	-79		
	8AT	light red	-79		
	1AJ	black	80-82		
	30B	dark blue	80-82		
	30A	blue	80		
	40D	cork	80		
	60S	hannibal grey	81-		
	20S	mint green	81-		

Pos	Part Number	Name	Remarks	Qty	Model
	6AD	doric grey	80		
	2LB	burgundy			M 403
	LG7	burgundy	83-		
	LG6	dark green	83-		
	KZ2	black	83-		
	KZ3	blue	83-		
	KZ5	brown	83-		
21	901 552 036 27	knee protection strip leatherette	/R	1	SC
	7AE	black			
	8AE	lobster	-78		
	5AE	cork			
	21S	brown	79-82		
	30B	dark blue	80-		
	3MX	burgundy	83-		
	4RB	brown	83-		
21	901 552 036 70	knee protection strip leather	/R	1	
	7AG	black	-79		
	8AH	lobster	-78		
	5AH	cork	-79		
	20B	dark green			
	3NG	dark brown			
	3AG	blue	-79		
	8AT	light red	-79		
	1AJ	black	80-82		
	30B	dark blue	80-82		
	30A	blue	80		
	40D	cork	80		
	60S	hannibal grey	81-		

Pos	Part Number	Name	Remarks	Qty	Model
	20S	mint green	81-		
	6AD	doric grey	80		
	2LB	burgundy			M 403
	LG7	burgundy	83-		
	LG6	dark green	83-		
	KZ2	black	83-		
	KZ3	blue	83-		
	KZ5	brown	83-		
22	901 552 050 25	ashtray handle leatherette		1	SC
	7AE	black			
	8AE	lobster	-78		
	5AE	cork			
	21S	brown	79-82		
	30B	dark blue	80-		
	3MX	burgundy	83-		
	4RB	brown	83-		
22	911 552 050 70	ashtray handle leather		1	
	7AG	black	-79		
	8AH	lobster	-78		
	5AH	cork	-79		
	20B	dark green			
	3NG	dark brown			
	3AG	blue	-79		
	8AT	light red	-79		
	1AJ	black	80-82		
	30B	dark blue	80-82		
	30A	blue	80		
	40D	cork	80		

Pos	Part Number	Name	Remarks	Qty	Model
	60S	hannibal grey	81-		
	20S	mint green	81-		
	6AD	doric grey	80		
	2LB	burgundy			M 403
	LG7	burgundy	83-		
	LG6	dark green	83-		
	KZ2	black	83-		
	KZ3	blue	83-		
	KZ5	brown	83-		
23	901 552 061 25	ashtray		1	
24	901 552 607 00	fireproof plate		1	
25	N 011 005 14	hexagon nut M 5		4	
26	N 011 665 3	washer 5,3		4	
27	N 011 005 14	hexagon nut M 5		2	
28	N 011 665 3	washer 5,3		2	
29	900 070 001 02	cap nut M 4		2	
30	N 012 224 3	spring washer B 4		2	
		- -- E N D -- -			

Pos	Part Number	Name	Remarks	Qty	Model

Model	Year	MG	SG	Illustration	Restrictions	Update	11:31	18.08.2006	PORSCHE PET PORSCHE
911	83	8	09	809-05		203			

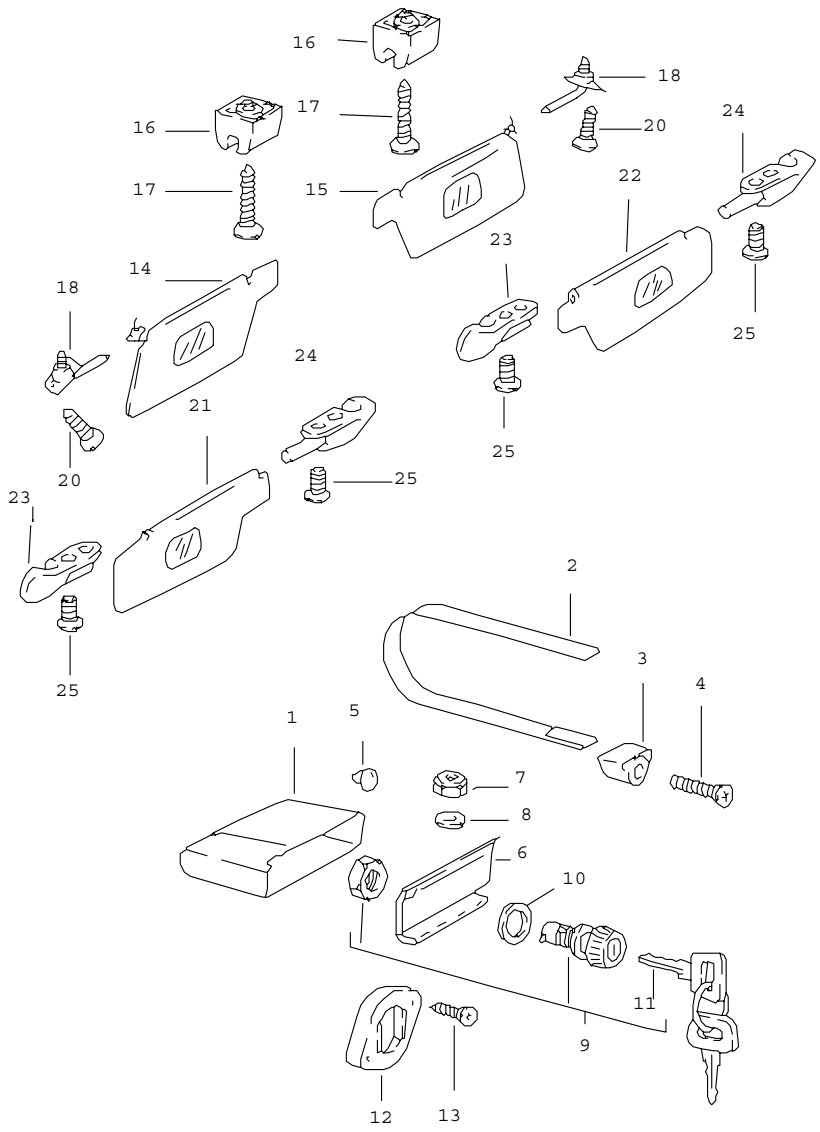

Pos	Part Number	Name	Remarks	Qty	Model
		glove compartment sun visors			
1	911 552 501 00	glove compartment		1	
2	901 552 531 20	restraining strap		1	
(3)	911 552 176 01	restraining strap	/LL	1	
4	900 146 010 02	oval-head screw AM 5 X 30		1	
5	999 703 064 50	rubber buffer 14 X 12		2	
(5)	999 703 330 50	buffer 14 X 17,5		X	
6	911 552 010 04	glove box cover		1	
7	N 021 196 1	lock nut M 5		4	
8	900 025 003 02	washer 5,3		4	
9	A 911 552 902 07	glove compartment lock		1	
9	911 552 902 07	glove compartment lock w/o stipulated lock number		1	
9	911 552 902 08	glove compartment lock state lock number		1	
10	911 552 103 01	washer		1	
(11)	A 911 538 903 00	blank key		2	
(11)	911 538 903 00	blank key		2	
(11)	944 538 041 00	key lamp		2	
(11)	911 538 902 00	replacement key state lock number information available		2	
12	911 552 513 02	door lock striker		1	
13	900 143 065 07	tapping screw 2,9 X 9,5		2	
(14)	911 731 031 17	sun visor without mirror	/LL/L	1	COUPE
	CA9	black			
	2LB	burgundy			M 403

Pos	Part Number	Name	Remarks	Qty	Model
	40A	brown	-82		
	JQ5	burgundy	83		
	CC4	white/black			
	CC1	blue			
	LA7	brown	83		
15	911 731 032 17	sun visor with mirror	/LL/R	1	COUPE
	CA9	black			
	2LB	burgundy			M 403
	40A	brown	-82		
	JQ5	burgundy	83-		
	CC4	white/black			
	CC1	blue			
	LA7	brown	83-		
(16)	911 731 331 00	support		2	COUPE
17	900 143 111 07	oval-head sheetmetal screw B 3,9 X 13		2	COUPE
18	964 731 319 00	bearing		2	COUPE
20	900 145 075 07	tapping screw B 4,2 X 16		4	COUPE
(21)	A 911 731 031 60	sun visor without mirror black	/L	1	TARGA
(21)	911 731 031 61	sun visor with mirror black	/L	1	TARGA/CABRIO
(22)	911 731 032 60	sun visor with mirror black	/R	1	TARGA/CABRIO
(22)	A 911 731 032 61	sun visor without mirror black	/R	1	TARGA
23	911 731 323 41	bearing bracket	/L	2	TARGA
(23)	964 731 319 40	bearing bracket	/L	2	CABRIO
24	911 731 324 41	bearing bracket	/R	2	TARGA
(24)	964 731 320 40	bearing	/R	2	CABRIO
25	900 145 075 07	tapping screw 4,2 X 16		4	TARGA/ CABRIO

- -- E N D -- -

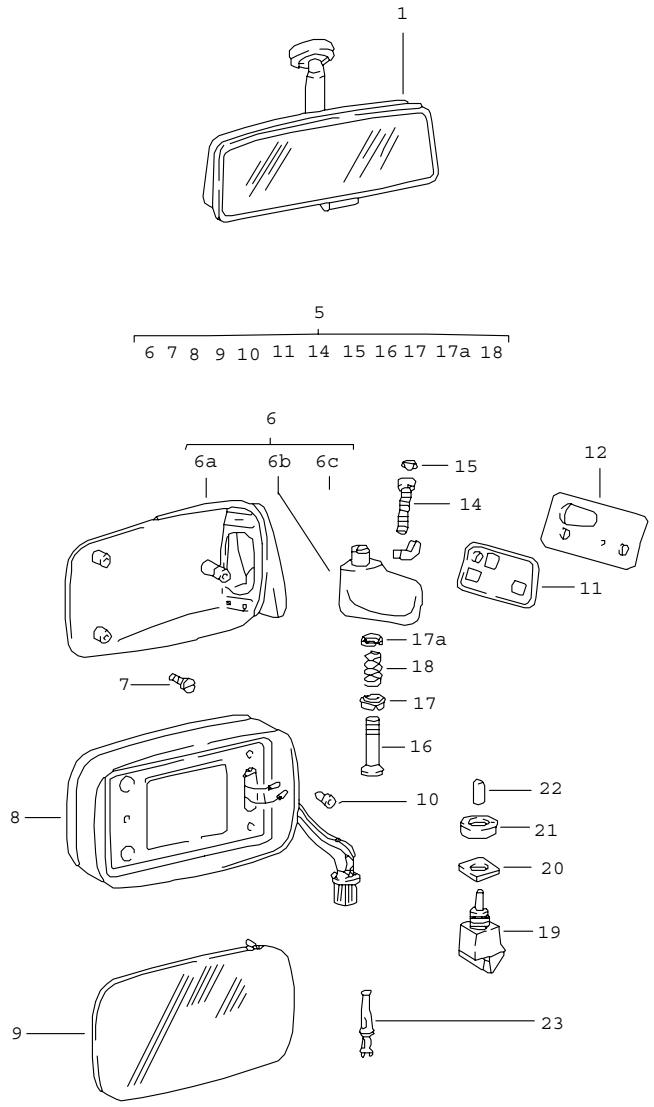

Pos	Part Number	Name	Remarks	Qty	Model
		rear-view mirror door mirror			
1	477 857 511 A	interior mirror		1	
	01C	black			
-	911 731 901 01	installation set door mirror for subsequent installat. order also:	/LL/R	1	
-	911 612 165 01	wiring harness		1	
-	911 612 164 03	wiring harness POS.9 see tpi NR.22		1	
5	A 911 731 927 00	door mirror plan	/LL/L	1	
5	A 911 731 928 00	door mirror plan	/LL/R	1	
5	A 911 731 929 00	door mirror convex	/LL/L	1	
5	A 911 731 930 00	door mirror convex	/LL/R	1	
(5)	-	see tpi NR.22			
(5)	911 731 927 01	repair kit door mirror	/LL/L	1	
(5)	911 731 928 01	repair kit door mirror	/LL/R	1	
		order also: POS. 8 - 10			
6A	A 911 731 043 03	mirror housing	/L	1	
6A	911 731 043 03	mirror housing	/L	1	
(6A)	A 911 731 044 03	mirror housing	/R	1	
(6A)	911 731 044 03	mirror housing	/R	1	
6B	911 731 241 02	mirror base	/LL/L	1	
(6B)	A 911 731 288 02	mirror base	/LL/R	1	
(6B)	911 731 288 02	mirror base	/LL/R	1	
6C	911 731 263 00	mounting piece		2	

Pos	Part Number	Name	Remarks	Qty	Model
7	999 143 003 02	hexagon-head bolt M 5 X 10		3	
8	A 911 731 027 06	frame	/L	1	
8	911 731 027 06	frame	/L	1	
(8)	A 911 731 028 06	frame	/R	1	
(8)	911 731 028 06	frame	/R	1	
9	911 731 035 08	mirror glass plan		1	
(9)	A 911 731 035 09	mirror glass		1	(S)(N)(J)
(9)	911 731 035 09	mirror glass convex		1	(S)(N)(J)
10	999 703 128 40	grommet		3	
11	911 731 247 00	desk pad	/L	1	
(11)	911 731 248 00	desk pad	/R	1	
12	911 531 197 00	reinforcement	/L	1	
(12)	911 531 198 00	reinforcement	/R	1	
14	999 218 021 02	pan-head screw micro-self-locking M 5 X 35		1	
15	999 703 137 40	cap		1	
16	A 911 731 257 02	guide tube		1	
16	911 731 257 02	guide tube		1	
17	911 731 345 02	adjusting washer lower		1	
17A	911 731 347 00	adjusting washer upper		1	
18	911 731 029 01	compression spring		1	
19	911 613 115 00	switch		1	
20	911 731 343 03	gasket		1	
21	911 731 251 00	round nut		1	
22	911 613 633 01	protection cap		1	
-	477 957 861	rubber sleeve wheel housing		1	

Pos	Part Number	Name	Remarks	Qty	Model
-	803 971 979	plug socket 7-pole		1	
23	N 017 562 4	cylindrical connector 1,6 X 0,75		X	
-	111 971 958	flat receptacle 2,8 X 8		6	
		electric line door mirror		1	
-	911 612 163 01	wiring harness driver's door		1	
-	911 612 163 02	wiring harness driver's door with alarm system	/LL	1	
-	911 731 317 00	seal connector		1	
-	911 612 162 03	wiring harness front trunk	/LL	1	
-	911 612 890 00	plug socket 3-pole		1	
		electric line door mirror		2	
-	911 612 165 01	wiring harness driver's side		1	
-	911 612 166 01	wiring harness passenger's side		1	
-	911 612 160 60	wiring harness passenger's side relay heating	/LL	1	CABRIO
-	911 612 164 03	wiring harness front trunk	/LL	1	
-	803 971 980	connector 7-pole		2	

- -- E N D -- -

Model	Year	MG	SG	Illustration	Restrictions	Update	11:32	18.08.2006	PORSCHE PET PORSCHE
911	83	8	09	809-15		203			

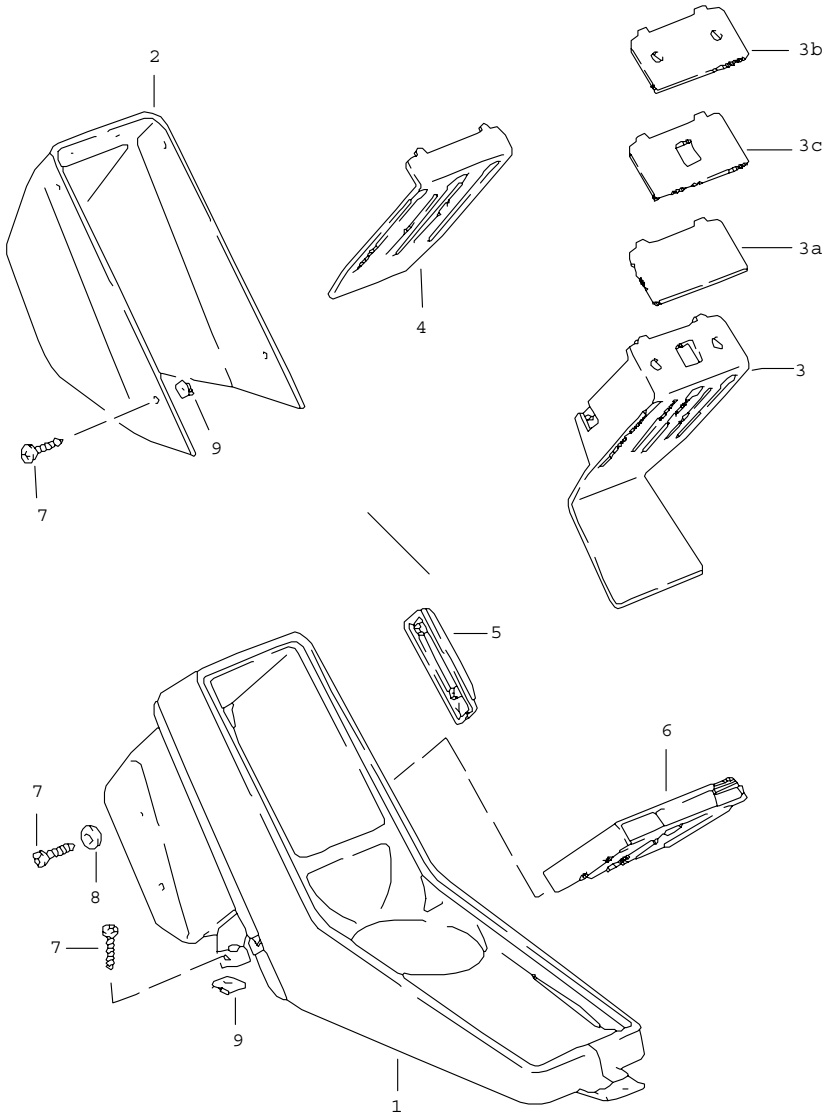

Pos	Part Number	Name	Remarks	Qty	Model
		centre console			
1	A 911 552 036 00	centre console leatherette		1	SC
	7AU	black	-82		
	8AU	lobster	-78		
	5AU	cork	-79		
	4AU	brown	79-82		
	3AU	dark blue	80-82		
	5BC	beige	80		
	3MK	burgundy	83-		
	05T	black	83-		
	1HH	blue	83-		
	4RB	brown	83-		
1	911 552 030 03	centre console leatherette		1	SC
	7AU	black	-82		
	8AU	lobster	-78		
	5AU	cork	-79		
	4AU	brown	79-82		
	3AU	dark blue	80-82		
	5BC	beige	80		
	3MK	burgundy	83-		
	05T	black	83-		
	1HH	blue	83-		
	4RB	brown	83-		
(1)	911 552 030 50	centre console leather		1	
	7AG	black	-79		
	8AH	lobster	-78		
	5AH	cork	-79		
	20B	dark green			

Pos	Part Number	Name	Remarks	Qty	Model
	2AP	light green	-78		
	3NG	brown	-82		
	3AG	blue	-79		
	8AT	light red	-79		
	1AG	yellow	-79		
	9AG	white	-79		
	1AJ	black	80-82		
	30B	dark blue	80-82		
	50B	beige	80-82		
	30A	blue	80		
	80B	light red	80		
	40D	cork	80		
	10A	yellow	80		
	99A	white	80		
	80S	can-can-red	81-82		
	95S	papyrus	81-82		
	60S	hannibal grey	81-82		
	20S	mint green	81-82		
	6AD	doric grey	80		
	2LB	burgundy			M 403
	LG7	burgundy	83-		
	LG6	dark green	83-		
	KZ2	black	83-		
	KZ3	blue	83-		
	KZ5	brown	83-		
2	911 552 231 00	cap		1	
(3)	911 552 169 00	cassette carrier order also:		1	
-	911 613 243 00	blower switch		1	
-	911 613 119 02	rose		1	

Pos	Part Number	Name	Remarks	Qty	Model
-	999 591 619 01	knob holder		1	
3A	911 552 273 00	adhesive film		1	
3B	911 552 269 00	cover air-conditioning switch		1	
3C	911 552 271 00	cover fader		1	
4	911 552 259 01	cover		1	
5	911 552 177 01	stop		1	
6	A 911 645 226 00	cassette box		X	
6	964 552 753 00	cassette box		X	
	01C	black			
7	900 143 007 02	tapping screw 4,2 X 13		9	
8	900 025 003 02	washer A 5,3		2	
9	999 507 240 00	speed nut B 4,2		7	
		- -- E N D -- -			

Model	Year	MG	SG	Illustration	Restrictions	Update	11:32	18.08.2006	PORSCHE PET PORSCHE
911	83	8	10	810-00		203			

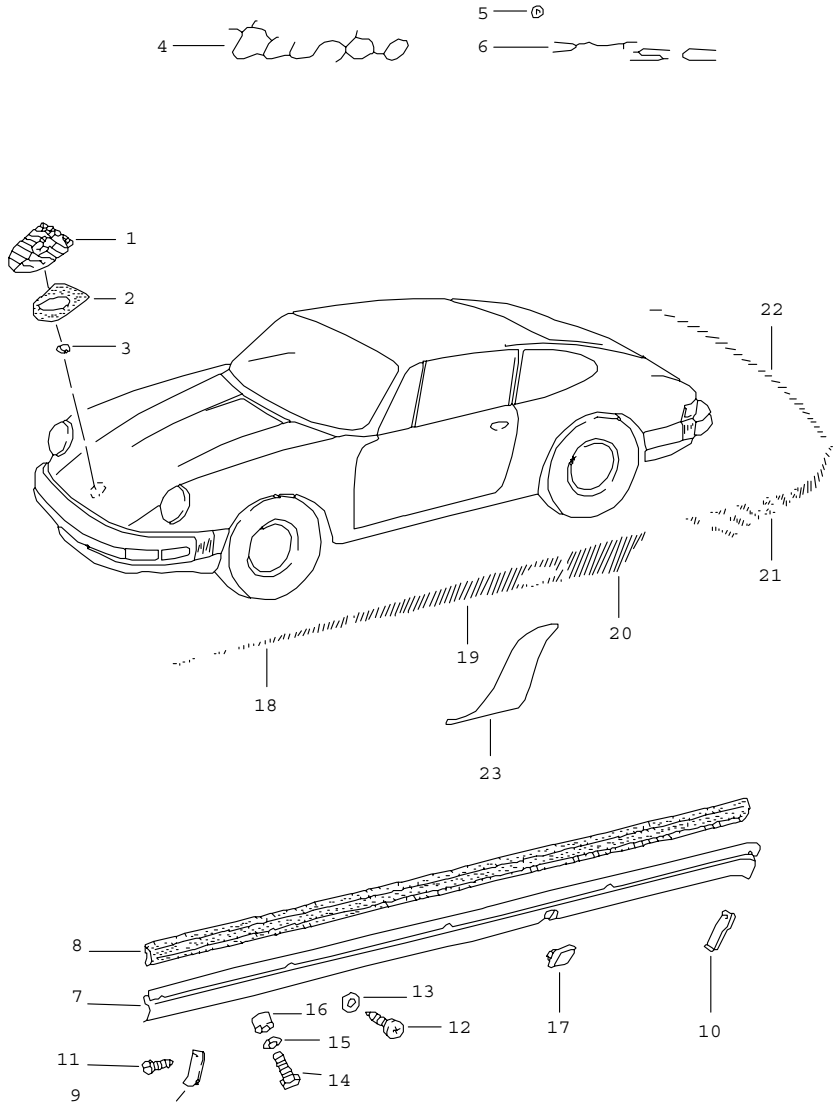

Pos	Part Number	Name	Remarks	Qty	Model
		decorative fittings			
1	A 901 559 210 20	lid emblem		1	
1	993 559 211 00	lid emblem		1	
2	901 559 215 20	desk pad		1	
3	999 591 423 03	tapping nut		2	
4	930 559 317 00	logo		1	TURBO
5	999 591 423 03	tapping nut		X	
6	911 559 337 00	logo		1	911 SC
7	911 559 047 01	trim	/L	1	SC
(7)	930 559 047 01	trim	/L	1	TURBO
(7)	911 559 048 01	trim	/R	1	SC
(7)	930 559 048 01	trim	/R	1	TURBO
8	930 559 103 01	rubber moulding		2	SC
(8)	930 559 103 01	rubber moulding		2	TURBO
9	911 559 141 04	end piece	/V/R /H/L	2	
10	911 559 142 04	end piece	/V/L /H/R	2	
11	900 143 049 07	tapping screw BZ 3,5 X 9,5		8	
12	900 143 031 02	oval-head sheetmetal screw B 4,2 X 9,5		10	
13	900 025 002 02	washer 4,3		10	
14	900 187 032 02	tapping screw B 6,3 X 32		6	
15	900 151 007 02	washer 7,4		6	
16	911 559 145 00	spacer sleeve 11,5		3	
16	911 559 145 01	spacer sleeve 5,5		3	
17	911 559 149 01	plug		2	

Pos	Part Number	Name	Remarks	Qty	Model
		adhesive film black hatched			
18	930 559 301 00	adhesive film	/L	1	
(18)	930 559 302 00	adhesive film	/R	1	
19	930 559 303 00	adhesive film	/L	1	
(19)	930 559 304 00	adhesive film	/R	1	
20	930 559 305 00	adhesive film	/L	1	
(20)	930 559 306 00	adhesive film	/R	1	
21	930 559 307 00	adhesive film	/L	1	
(21)	930 559 308 00	adhesive film	/R	1	
22	930 559 309 00	adhesive film		1	
		adhesive film white hatched			
(18)	930 559 301 01	adhesive film	/L	1	
(18)	930 559 302 01	adhesive film	/R	1	
(19)	930 559 303 01	adhesive film	/L	1	
(19)	930 559 304 01	adhesive film	/R	1	
(20)	930 559 305 01	adhesive film	/L	1	
(20)	930 559 306 01	adhesive film	/R	1	
(21)	930 559 307 01	adhesive film	/L	1	
(21)	930 559 308 01	adhesive film	/R	1	
(22)	930 559 309 01	adhesive film		1	
		lateral stripes MARTINI			
8-22	911 559 017 00	adhesive film 1 set	-78	1	SC
(18)	911 559 351 00	adhesive film	/L -78	1	SC
(18)	911 559 352 00	adhesive film	/R -78	1	SC
(19)	911 559 353 00	adhesive film	/L -78	1	SC
(19)	911 559 354 00	adhesive film	/R -78	1	SC
(20)	911 559 355 00	adhesive film	/L -78	1	SC
(20)	911 559 356 00	adhesive film	/R -78	1	SC
(21)	911 559 357 00	adhesive film	/L -78	1	SC
(21)	911 559 358 00	adhesive film	/R -78	1	SC
(22)	911 559 359 00	adhesive film	-78	1	SC
		lateral stripes MARTINI			
8-22	930 559 017 00	adhesive film 1 set	-78	1	TURBO
(18)	930 559 351 00	adhesive film	/L -78	1	TURBO
(18)	930 559 352 00	adhesive film	/R -78	1	TURBO
(19)	930 559 353 00	adhesive film	/L -78	1	TURBO
(19)	930 559 354 00	adhesive film	/R -78	1	TURBO
(20)	930 559 355 00	adhesive film	/L -78	1	TURBO
(20)	930 559 356 00	adhesive film	/R -78	1	TURBO
(21)	930 559 357 00	adhesive film	/L -78	1	TURBO
(21)	930 559 358 00	adhesive film	/R -78	1	TURBO
(22)	930 559 359 00	adhesive film	-78	1	TURBO
23	A 930 559 921 00	stone guard film set		1	TURBO
23	930 559 321 00	stone guard film	/L	1	TURBO
(23)	930 559 322 00	stone guard film	/R	1	TURBO

- -- E N D -- -

Model	Year	MG	SG	Illustration	Restrictions	Update	11:32	18.08.2006	PORSCHE PET PORSCHE
911	83	8	10	810-05		203			

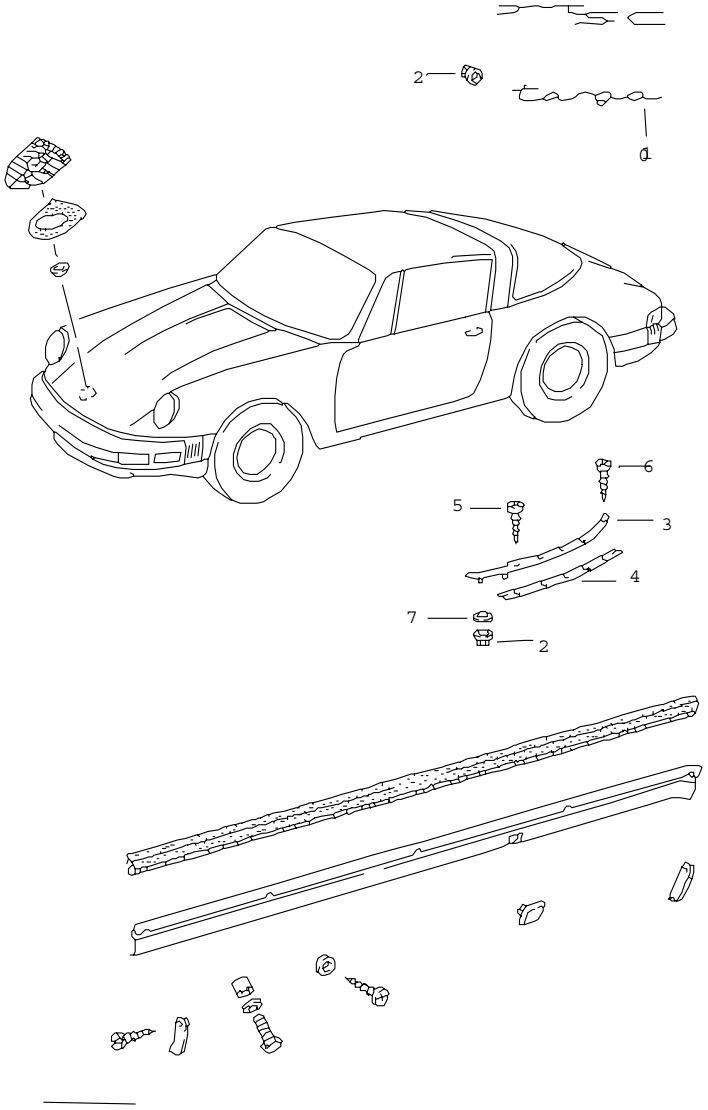

Pos	Part Number	Name	Remarks	Qty	Model
		decorative fittings			TARGA
1	911 559 307 41	logo		2	TARGA
2	999 591 423 03	tapping nut		6	
3	911 565 947 40	moulding chrome	/L -79	1	
(3)	911 565 049 40	moulding	/L	1	
	70K	black			
(3)	911 565 948 40	moulding chrome	/R -79	1	
(3)	911 565 050 40	moulding	/R	1	
	70K	black			
4	901 565 557 40	piping		2	
5	N 013 957 5	tapping screw B 3,5 X 9,5		8	
6	900 144 009 00	counters. head tapp. screw 2,9 X 13		2	
7	900 151 006 40	washer B 6,4		4	
		- -- E N D -- -			

Model	Year	MG	SG	Illustration	Restrictions	Update	11:32	18.08.2006	PORSCHE PET PORSCHE
911	83	8	11	811-00		203			

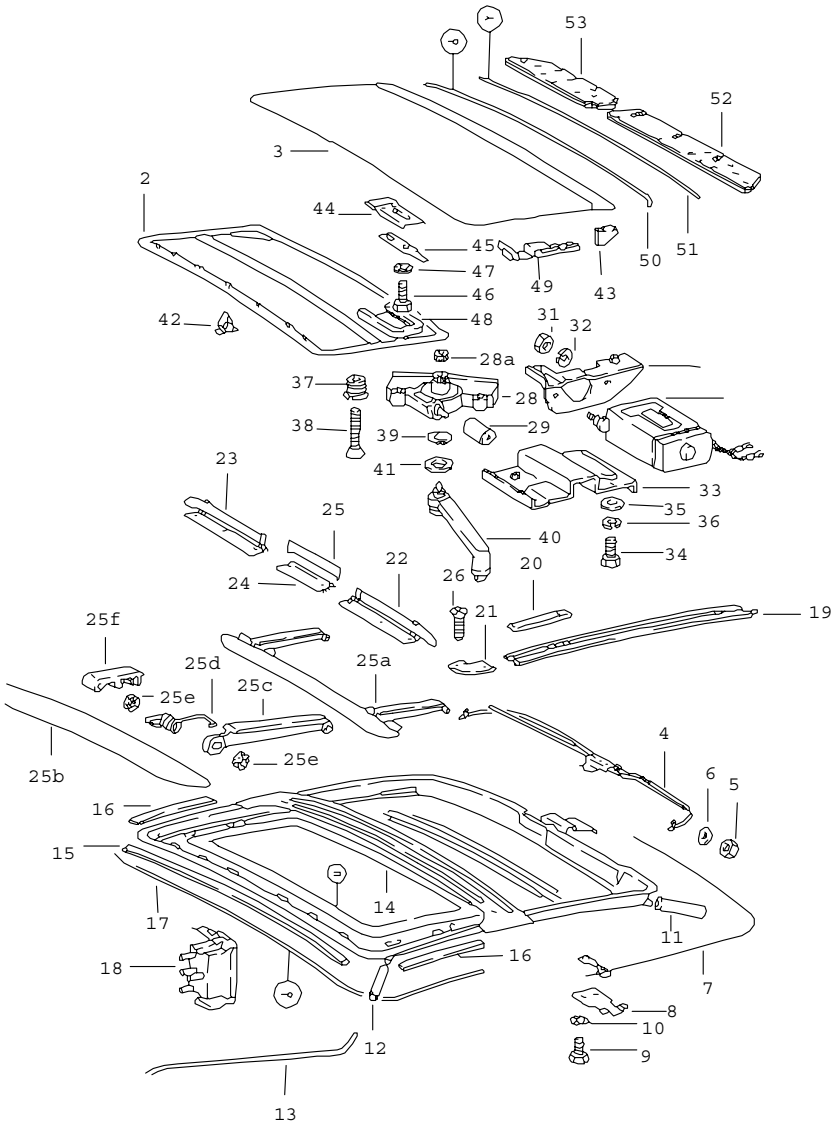

Pos	Part Number	Name	Remarks	Qty	Model
		sunroof			
2	911 564 020 00	roof frame		1	
	500	beige	-82		
	700	black			
	3AD	dark blue	-82		
	21S	brown	-82		
	2LB	burgundy			M 403
	8LC	burgundy	83-		
	7FC	grey-beige	83-		
	1HH	blue	83-		
	4RB	brown	83-		
-	901 564 291 07	cover roof frame		1	
	500	beige	-82		
	700	black			
	3AD	dark blue	-82		
	21S	brown	-82		
	2LB	burgundy			M 403
	8LC	burgundy	83-		
	7FC	grey-beige	83-		
	1HH	blue	83-		
	4RB	brown	83-		
3	930 564 051 01	cover		1	
-	911 564 417 00	leaf spring		2	
-	911 564 420 00	knurled nut		4	
(4)	964 564 231 00	pipeline		1	
5	N 011 005 14	hexagon nut M 5		2	
6	900 025 003 02	washer A 5,3		2	
(7)	911 564 043 01	guide	/L	1	

Pos	Part Number	Name	Remarks	Qty	Model
(7)	911 564 044 01	guide	/R	1	
8	901 564 451 05	reinforcement		2	
9	900 075 106 02	hexagon-head bolt M 4 X 6		4	
10	N 012 116 1	serrated lock washer A 4,3		4	
11	911 564 825 00	water drain hose	/H	2	
12	911 564 821 01	water drain hose	/V	2	
13	911 503 581 01	water drain tube	/L	1	
(13)	911 503 582 01	water drain tube	/R	1	
14	911 564 465 00	beading		1	
15	911 564 409 00	sealing strip front		1	
16	911 564 409 01	sealing strip lateral		2	
17	911 564 191 00	velvet strip		1	
18	911 613 622 00	tip switch for electric adjustment		1	
19	901 564 041 05	guide rail	/L -81	1	
(19)	911 564 041 00	guide rail	/L 82	1	
(19)	911 564 041 01	guide rail	/L 83-	1	
(19)	901 564 042 05	guide rail	/R -81	1	
(19)	911 564 042 00	guide rail	/R 82	1	
(19)	911 564 042 01	guide rail	/R 83-	1	
20	901 564 407 05	intermediate piece	-82	2	
20	911 564 047 00	intermediate piece	83-	2	
21	901 564 405 05	end piece	/L -82	1	
(21)	901 564 406 05	end piece	/R -82	1	
22	901 564 073 05	air deflector cable cover	/L -82	1	
23	901 564 074 05	air deflector cable cover	/R -82	1	
24	901 564 409 05	centre piece	-82	1	
25	901 564 703 05	air deflector centre	-82	1	
25A	911 564 005 01	air deflector	83-	1	
25B	911 564 015 00	wind deflector plate	83-	1	
25C	911 564 127 00	hinge	83-	2	
25D	911 564 125 00	spring	/L 83-	1	
(25D)	911 564 126 00	spring	/R 83-	1	
25E	911 564 423 00	rubber stop	83-	4	
25F	911 564 123 00	clip	83-	2	
26	900 145 009 02	tapping screw B 3,9 X 9,5		16	
27	911 624 016 03	motor		1	
28	911 564 601 01	transmission		1	
28A	928 564 125 02	drive pinion		1	
29	911 624 103 00	clutch		1	
30	911 624 007 01	engine support		1	
31	N 011 005 14	hexagon nut M 5		2	
32	N 012 005 3	lock ring B 5		2	
33	964 564 035 00	support		1	
34	N 010 225 4	hexagon-head bolt M 5 X 8		1	
35	900 025 003 02	washer A 5,3		2	
36	N 012 005 3	lock ring B 5		2	
37	901 564 661 05	screw		2	
38	900 269 012 02	countersunk-head screw M 4 X 25		2	
39	901 564 663 05	cap		1	
40	901 564 085 05	crank		1	
41	911 564 643 00	washer		3	

Pos	Part Number	Name	Remarks	Qty	Model
42	901 564 299 05	clamp		7	
43	901 564 431 05	guide shoe		2	
44	911 564 045 00	guide		2	
45	911 564 451 00	tab washer		2	
46	911 564 459 00	screw AM 5 X 12		4	
47	900 025 003 02	washer A 5,3		4	
48	911 564 401 00	cap/protective strip		2	
(49)	901 564 433 05	protective edging	-82	4	
49	911 564 433 00	support	83-	4	
50	911 564 193 00	velvet strip		1	
51	901 564 905 05	sealing rubber rear		1	
52	911 564 025 01	cover		1	
53	911 564 026 00	cover		1	
		- -- E N D -- -			

Pos	Part Number	Name	Remarks	Qty	Model

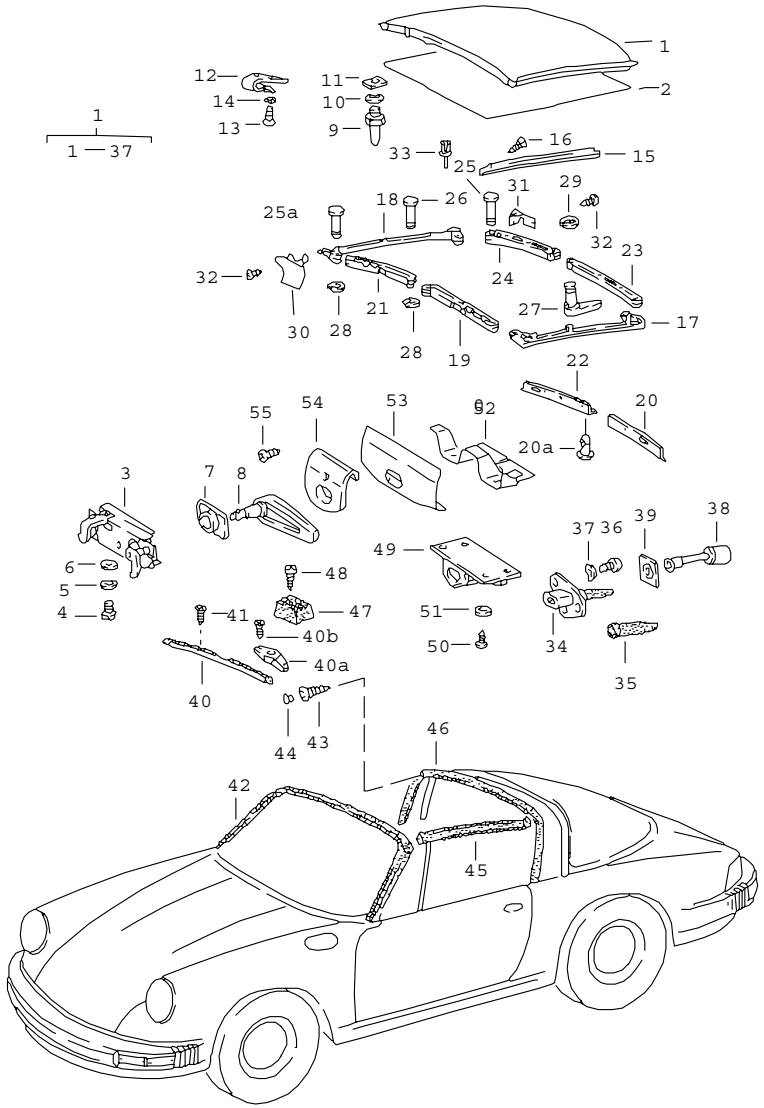

Pos	Part Number	Name	Remarks	Qty	Model
		soft top			TARGA
1	911 565 002 40	soft top		1	
-	901 565 035 41	outer lining soft top		1	
2	901 565 036 43	inner lining		1	
3	A 911 565 031 41	catch	-81	2	
3	911 565 031 41	catch		2	
4	999 509 006 02	pan-head screw M 6 X 15	-81	4	
4	900 249 001 02	countersunk-head screw M 6 X 15	82-	4	
5	N 012 226 5	spring washer B 6		4	
6	N 011 524 7	washer A 6,4		4	
7	901 565 299 45	rose		2	
8	911 565 075 41	handle		2	
9	911 565 074 40	locating peg		2	
10	N 012 241 1	spring washer		2	
11	901 565 203 40	threaded plate		2	
12	964 565 265 00	latch		8	
13	999 219 006 02	countersunk-head screw M 4 X 8		16	
14	900 115 008 02	serrated lock washer V 4,3	-80	16	
15	901 565 303 45	rain channel	/L	1	
(15)	901 565 304 45	rain channel	/R	1	
16	900 143 049 07	tapping screw BZ 3,5 X 9,5		10	
17	901 565 201 45	roof frame lateral	/L	1	
18	901 565 202 45	roof frame lateral	/R	1	
19	911 565 207 40	roof frame front	/L	1	

Pos	Part Number	Name	Remarks	Qty	Model
20	901 565 093 46	padded cover	/L	1	
20A	999 703 114 40	plug		10	
21	911 565 208 40	roof frame front	/R	1	
22	901 565 094 46	padded cover	/R	1	
23	901 565 211 45	roof frame rear	/L	1	
24	911 565 212 40	roof frame rear	/R	1	
25	901 565 328 45	bolt		4	
26	901 565 209 40	bolt		1	
27	964 565 145 00	locking bolt		1	
28	900 041 004 01	circlip		5	
29	900 116 007 01	lock washer		1	
(30)	901 565 097 46	lining	/V/L	1	
30	901 565 098 46	lining	/V/R	1	
(31)	901 565 273 45	cover	/H/L	1	
31	901 565 274 45	cover	/H/R	1	
(31)	901 565 289 45	cover strip black	-82	2	
32	N 013 953 2	tapping screw B 2,9 X 9,5		12	
33	999 591 519 40	expansion rivet		3	
34	911 565 037 42	silentbloc	/L	1	
(34)	911 565 038 42	silentbloc	/R	1	
35	911 565 217 40	covering		2	
36	N 014 765 2	pan-head screw M 6 X 10		6	
37	N 012 226 5	spring washer B 6		6	
38	911 565 220 41	silentbloc		2	
39	901 565 361 40	seal		2	
40	911 555 559 41	strip chrome	/L -82	1	
(40)	911 555 559 60	strip black	/L	1	
(40)	911 555 560 41	strip chrome	/R -82	1	
(40)	911 555 560 60	strip black	/R	1	
40A	911 555 491 40	guide rose	/L 83-	1	
(40A)	911 555 492 40	guide rose	/R 83-	1	
40B	900 143 084 07	oval-head sheetmetal screw B 3,5 X 16	83-	4	
41	900 145 036 00	tapping screw B 3,5 X 13		8	
(41)	900 145 071 07	tapping screw black B 3,5 X 13		8	
42	911 565 090 47	gasket		1	TARGA/ CABRIO
43	999 703 186 40	plastic plug		4	
44	999 591 384 40	cap		4	
45	911 565 259 40	roof frame seal roof frame	/L	1	
(45)	911 565 260 40	roof frame seal roof frame	/R	1	
46	911 565 091 45	gasket roll bar		1	
47	911 565 147 41	rubber stop		2	
48	N 013 953 2	tapping screw B 2,9 X 13		2	
49	911 565 187 40	mounting locking bolt		1	
50	N 013 957 5	tapping screw B 3,5 X 9,5		4	
51	900 025 002 02	washer 4,3		4	
52	911 565 133 40	supporting plate		1	

Pos	Part Number	Name	Remarks	Qty	Model	Pos	Part Number	Name	Remarks	Qty	Model
53	911 565 135 40	cover plate		1							
54	911 565 189 41	cover plate		1							
55	900 145 003 07	tapping screw B 3,5 X 9,5		1							
		- -- E N D -- -									

Model	Year	MG	SG	Illustration	Restrictions	Update			
911	83	8	11	811-10		203	11:33	18.08.2006	PORSCHE PET PORSCHE

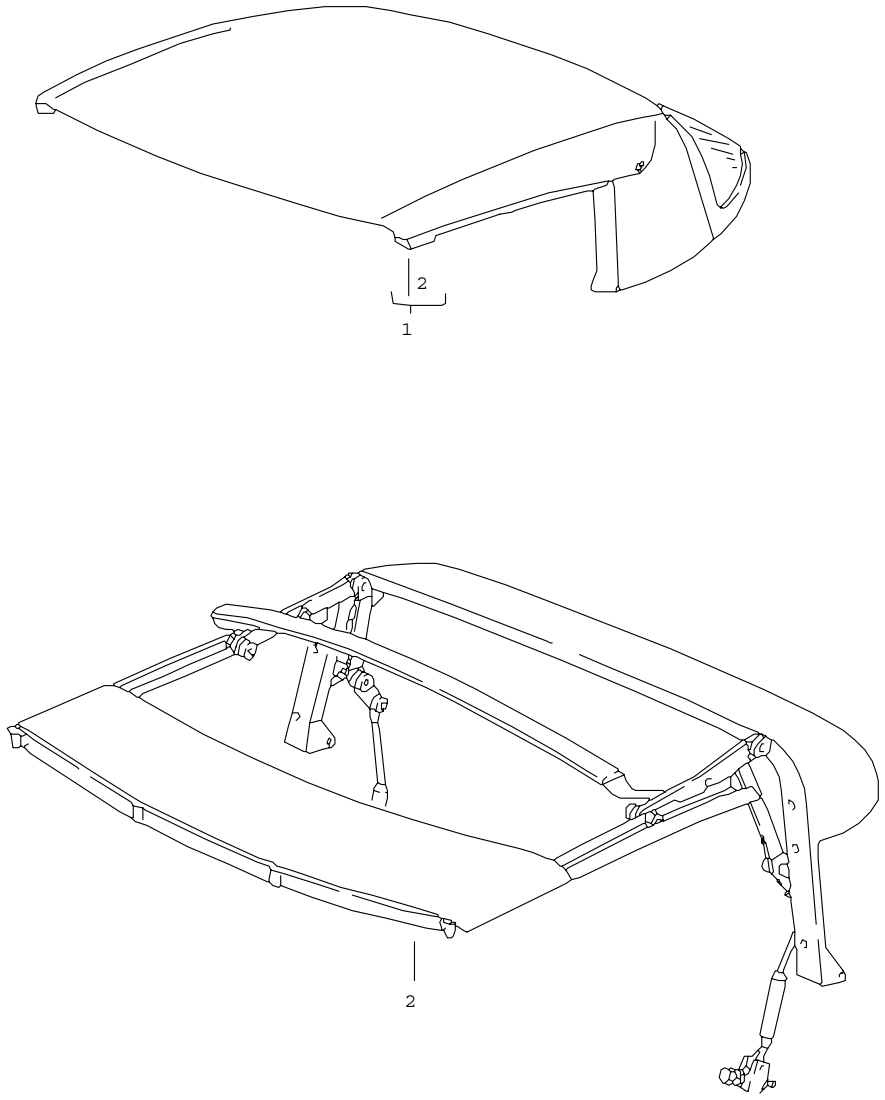

Pos	Part Number	Name	Remarks	Qty	Model
		convertible top convertible top frame manual			
1	911 561 005 00	convertible top		1	
	3AV	black			
2	911 561 011 00	convertible top frame		1	
		- -- E N D -- -			

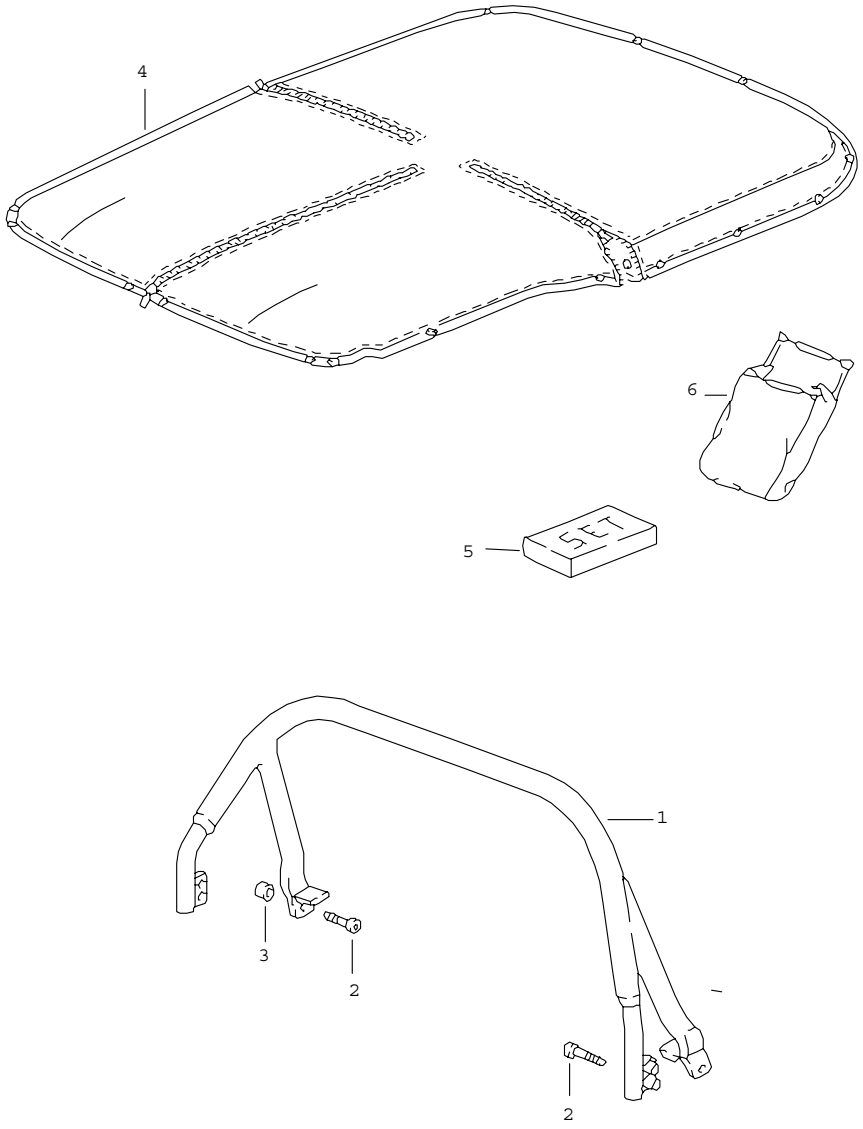

Pos	Part Number	Name	Remarks	Qty	Model
		protective bracket tonneau cover			
1	911 565 907 61	protective bracket leatherette black		1	
1	911 565 907 62	protective bracket leather black		1	
2	900 119 090 07	pan-head screw M 10 X 40		4	
(2)	900 119 006 07	pan-head screw M 10 X 35		2	
3	911 565 247 60	bush		2	
4	911 561 923 00	tonneau cover	/LL	1	
5	911 561 921 00	installation set		1	
6	911 561 087 00	bag		1	
		- -- E N D -- -			

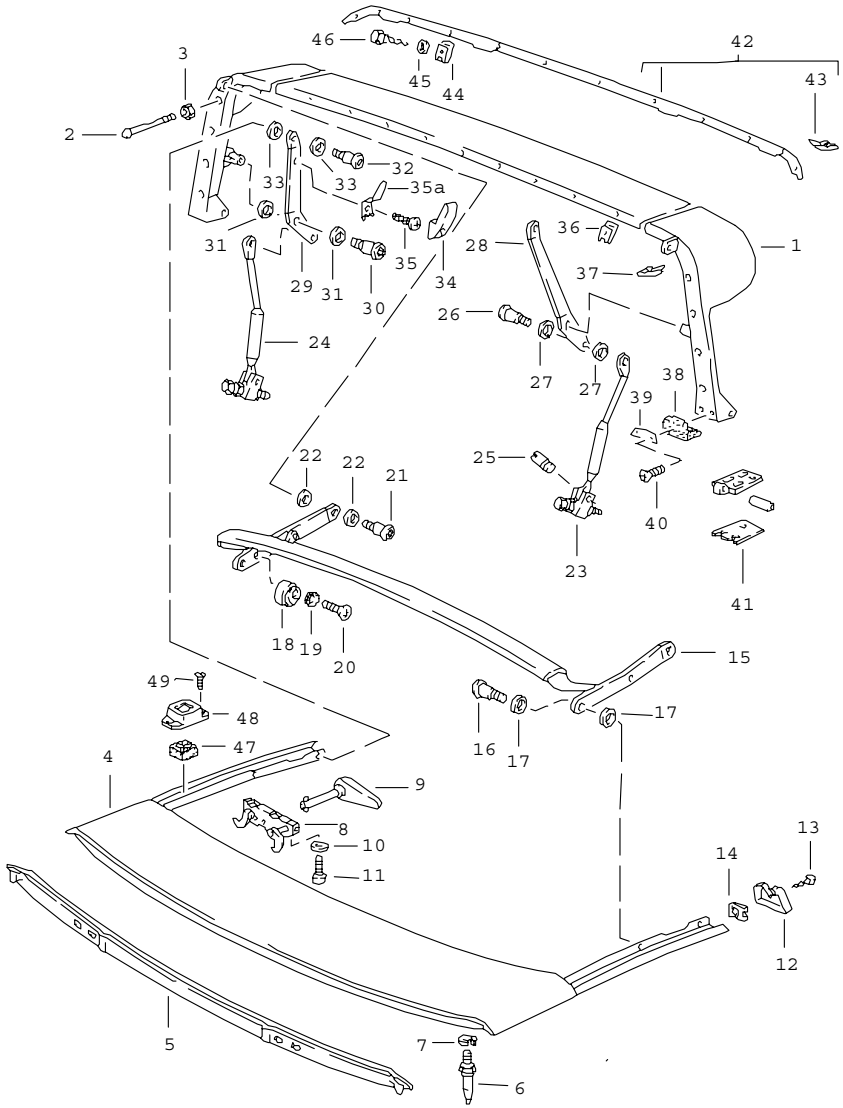

Pos	Part Number	Name	Remarks	Qty	Model
		main folding top bow roof frame single parts			
1	911 561 015 00	main folding top bow		1	
2	911 561 449 00	retaining pivot		2	
3	900 076 010 02	hexagon nut M 6		2	
4	911 561 027 00	roof frame		1	
5	911 565 269 60	lining		1	
6	911 565 074 40	locating peg		2	
7	N 012 228 3	spring washer B 8		2	
8	911 565 031 41	catch		2	
9	911 565 075 41	handle		2	
10	N 011 524 7	washer A 6,4		4	
11	999 218 015 02	pan-head screw micro-self-locking M 6 X 12		4	
12	911 561 139 00	end piece	/L	1	
(12)	911 561 140 00	end piece	/R	1	
13	N 014 086 12	tapping screw 3,5 X 13		2	
14	999 591 349 02	speed nut B 3,5		2	
15	911 561 019 00	intermed. folding top bow		1	
16	911 561 461 00	screw M 8 X 20		2	
17	911 561 428 00	washer 10,5		4	
18	911 561 402 00	eccentric washer		2	
19	N 012 140 1	shake-proof washer		2	
20	N 033 185 1	countersunk-head screw M 4 X 16		2	
21	911 561 421 00	screw M 8 X 24		2	

Pos	Part Number	Name	Remarks	Qty	Model
21	911 561 426 00	screw		2	
22	911 561 428 00	washer 10,5		4	
23	911 561 041 00	lever	/L	1	
24	911 561 042 00	lever	/R	1	
25	911 561 425 00	screw		2	
26	911 561 418 00	screw M 8 X 20		2	
27	911 561 428 00	washer 10,5		4	
28	911 561 171 00	lever	/L	1	
29	911 561 172 00	lever	/R	1	
30	911 561 420 00	screw M 10 X 28		2	
31	911 561 430 00	washer 13,5		4	
32	911 561 461 00	screw M 8 X 20		2	
33	911 561 428 00	washer 10,5		4	
34	901 552 871 40	cover		2	
35	900 250 006 02	tapping screw AM 5 X 10		2	
35A	901 552 872 20	coat hook		2	
36	999 507 020 02	speed nut 4,2		7	
37	999 507 018 02	speed nut 4,2		2	
38	911 561 471 00	gasket		2	
39	911 561 475 00	plate		2	
40	900 269 056 07	countersunk-head screw M 4 X 10		4	
41	911 561 423 00	plate 2 MM		X	
41	911 561 423 01	plate 1 MM		X	
42	911 561 035 00	rail		1	
43	999 591 582 02	speed nut 4,2		4	
44	999 507 032 02	speed nut 3,9		11	
45	900 151 001 02	washer 4,3		11	
46	900 187 037 07	hexagon-head tapping screw 4,2 X 16		11	
47	911 561 453 00	buffer		2	
48	911 561 451 00	housing		2	
	70B	black			
49	900 269 043 02	countersunk-head screw M 4 X 12		4	
		- -- E N D -- -			

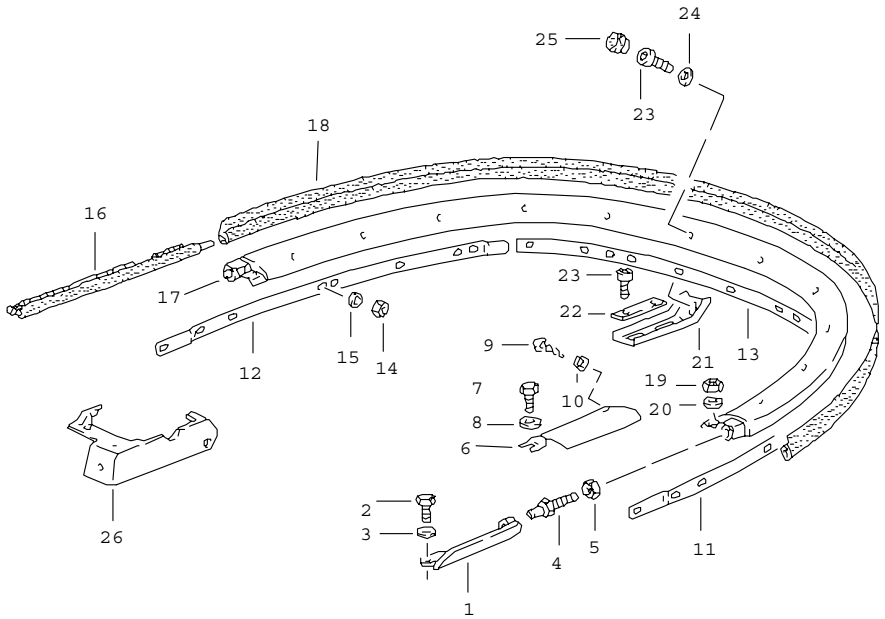

Pos	Part Number	Name	Remarks	Qty	Model
		convertible top clamp single parts			
1	911 561 341 01	tensioner blade	/L	1	
(1)	911 561 342 01	tensioner blade	/R	1	
2	N 010 210 7	hexagon-head bolt M 6 X 10		3	
3	900 025 047 07	washer A 6,4		2	
4	911 561 331 00	locating peg		2	
5	900 076 062 07	hexagon nut M 8		2	
6	911 555 077 60	rear covering	/L	1	
(6)	911 555 078 60	rear covering	/R	1	
7	900 075 085 02	hexagon-head bolt M 8 X 20		6	
8	900 025 007 02	washer A 8,4 X 16 X 1,6		6	
9	N 014 093 3	tapping screw 4,2 X 13		2	
10	999 591 116 07	cone washer		2	
11	911 561 283 00	rail	/L	1	
12	911 561 284 00	rail	/R	1	
13	911 561 281 00	rail centre		1	
14	N 011 005 14	hexagon nut M 5		19	
15	900 025 003 02	washer 5,3		19	
(16)	911 561 463 00	gasket	/L	1	
16	911 561 464 00	gasket	/R	1	
17	911 561 083 01	clamp		1	
18	911 561 371 00	sealing rubber		1	
19	900 076 010 02	hexagon nut M 6		2	

Pos	Part Number	Name	Remarks	Qty	Model	Pos	Part Number	Name	Remarks	Qty	Model
20	N 011 524 7	washer A 6,4		2							
21	911 561 379 00	support		3							
22	911 561 387 00	desk pad		1							
23	N 014 761 2	pan-head screw M 6 X 12		9							
24	N 011 524 7	washer A 6,4		3							
25	999 703 169 40	cap		3							
(26)	911 555 763 63	cover	/L	1							
26	911 555 764 63	cover	/R	1							
-	A 999 591 835 17	snap fastener lower part		2							
-	999 591 835 17	snap fastener lower part		2							
-	999 190 162 37	blind rivet		2							
		- -- E N D -- -									

Model	Year	MG	SG	Illustration	Restrictions	Update	11:34	18.08.2006	PORSCHE PET PORSCHE
911	83	8	11	811-15		203			

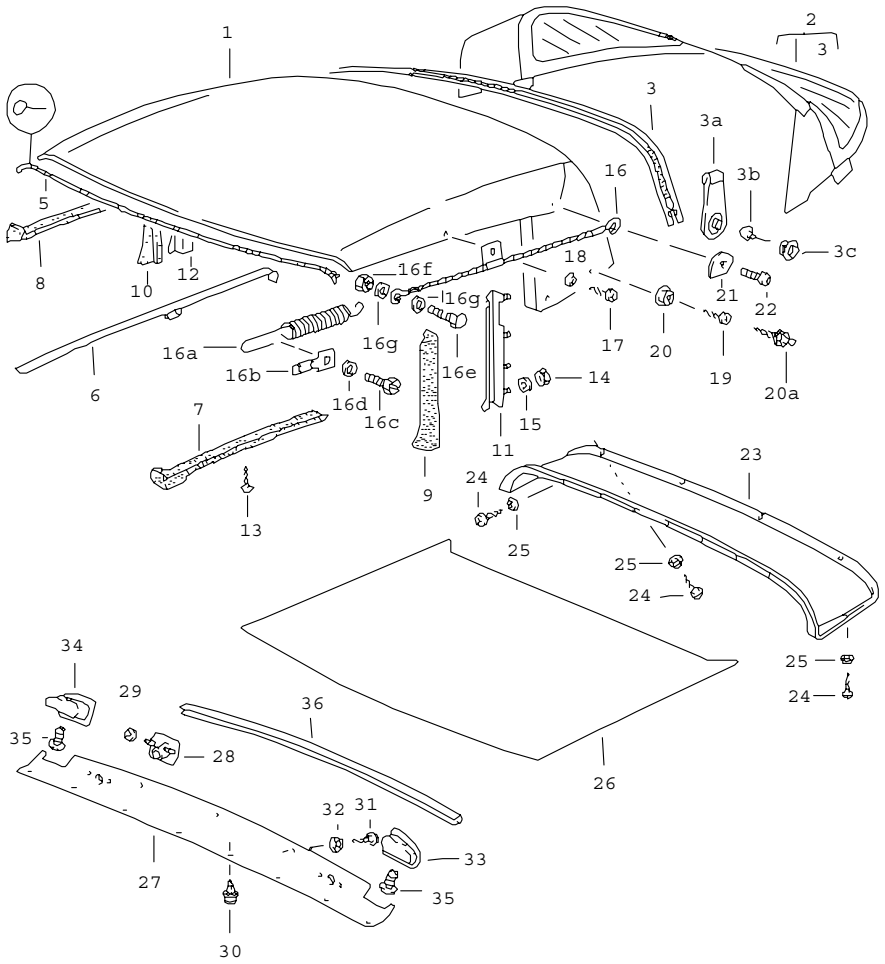

Pos	Part Number	Name	Remarks	Qty	Model
		convertible top seal single parts			
1	911 561 051 00	convertible top covering roof	/V	1	
	3AV	black			
2	911 561 053 00	rear window with cover	/H	1	
	3AV	black			
-	911 561 359 00	rear window		1	
3	911 561 405 01	zip		1	
	3AV	black			
-	000 043 022 00	zip		X	
	3AV	black			
3A	911 561 523 01	loop		1	
	1AJ	black			
3B	900 144 028 07	tapping screw		1	
3CA	911 561 485 00	snap fastener lower part		1	
3C	999 591 835 17	snap fastener lower part		1	
5	911 561 244 01	roof frame seal		1	
6	911 561 153 65	restraining strap		2	
7	911 561 205 00	seal	/L	1	
8	911 561 206 00	seal	/R	1	
9	911 561 221 01	gasket	/L	1	
10	911 561 222 01	gasket	/R	1	
11	911 561 025 00	rail	/L	1	
12	911 561 026 00	rail	/R	1	
13	N 013 958 7	tapping screw B 3,5 X 13		8	
14	900 076 010 07	hexagon nut M 6		8	

Pos	Part Number	Name	Remarks	Qty	Model
15	900 025 047 07	washer 6,4		8	
16	911 561 239 00	tension rope	/L	1	
(16)	911 561 240 00	tension rope	/R	1	
16A	911 561 403 01	tension spring		2	
16B	911 561 407 00	support		2	
16C	N 010 211 4	hexagon-head bolt M 6 X 12		2	
16D	N 011 524 7	washer 6,4		4	
16E	900 075 100 02	hexagon-head bolt M 4 X 12		2	
16F	900 910 006 02	lock nut M 4		4	
16G	N 011 522 14	washer 4,3		4	
17	900 144 028 07	tapping screw B 3,5 X 13		2	
18	999 591 102 17	washer D 3,5 X 11		2	
19	900 144 028 07	tapping screw B 3,5 X 13		2	
20	A 999 591 835 17	snap fastener lower part		14	
20	999 591 835 17	snap fastener lower part		14	
20A	999 591 598 02	tenax lower part B 4,2 X 16		2	
(20A)	999 591 597 02	tenax lower part B 4,2 X 10		6	
21	911 561 455 00	end piece		2	
22	N 033 203 2	countersunk-head screw M 4 X 18		2	
23	911 561 059 00	lining		1	
24	900 145 096 07	tapping screw 4,2 X 16		13	
25	999 591 116 07	cone washer		13	
26	911 561 050 00	roof lining		1	
27	911 565 093 60	padded cover		1	
28	911 565 279 60	rose		2	
29	999 591 676 02	clamping washer $=7		4	
30	823 867 299	clip		8	
31	N 014 093 3	tapping screw 4,2 X 13		3	
32	999 591 116 07	cone washer 4,5 90 DEG		3	
33	911 565 271 60	handle	/L	1	
34	911 565 272 60	handle	/R	1	
35	999 591 587 40	expansion rivet		2	
36	911 555 593 61	edge protection		1	
-	911 565 299 60	moltoprene shim protective edging		2	
-	911 565 297 60	cover protective edging		1	

- -- E N D -- -

Model	Year	MG	SG	Illustration	Restrictions	Update	11:34	18.08.2006	PORSCHE PET PORSCHE
911	83	8	11	811-16		203			

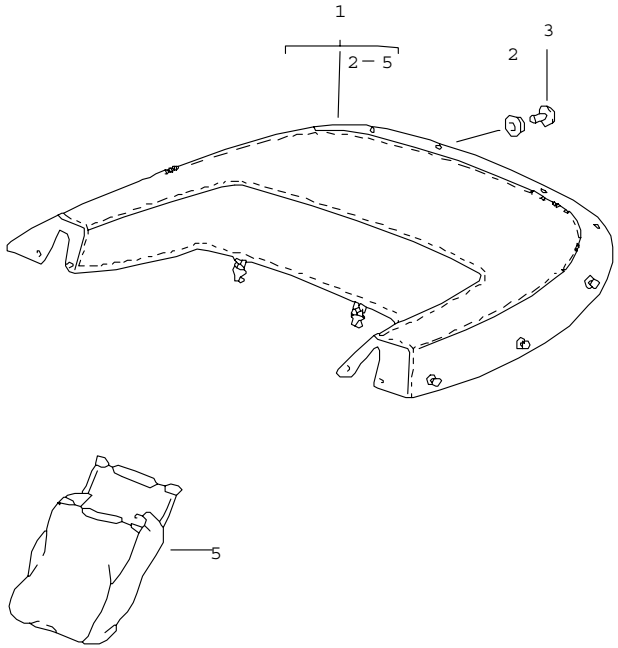

Pos	Part Number	Name	Remarks	Qty	Model
		convertible top cover			
1	911 561 023 00	convertible top cover		1	
	3AV	black			
-	999 591 598 02	tenax lower part B 4,2 X 16		X	
-	999 591 983 12	tenax upper part		X	
(2) A	999 591 836 17	push button		14	
2	999 591 836 17	push button $=9,5		X	
(3) A	999 591 838 17	cap		14	
3	999 591 838 17	cap $=4/15		X	
5	911 561 087 00	bag		1	
		- -- E N D -- -			

Model	Year	MG	SG	Illustration	Restrictions	Update			
911	83	8	11	811-50		203	11:34	18.08.2006	PORSCHE PET PORSCHE

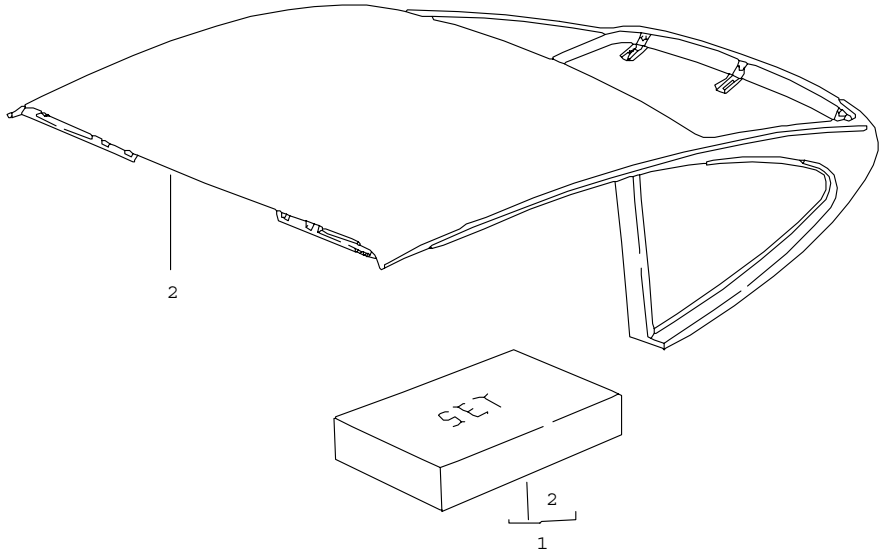

Pos	Part Number	Name	Remarks	Qty	Model
		hardtop			
1	911 561 901 00	installation set leatherette black		1	
2	911 503 969 00	roof		1	
		- -- E N D -- -			

Model	Year	MG	SG	Illustration	Restrictions	Update	11:34	18.08.2006	PORSCHE PET PORSCHE
911	83	8	12	812-00		203			

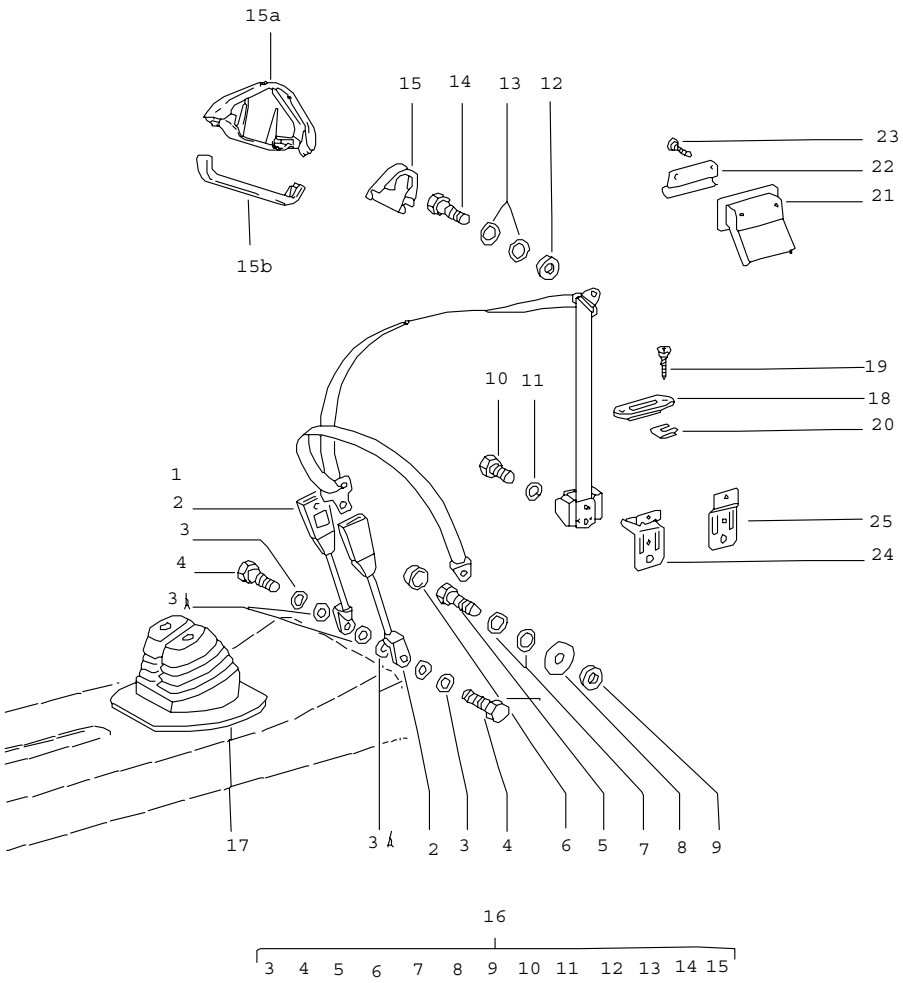

Pos	Part Number	Name	Remarks	Qty	Model
		seat belt front			
(1+2)	A 911 803 918 01	seat belt automatic	/R -79	1	
1	A 928 803 126 09	seat belt automatic not for	-79	2	(AUS)
(1)	928 803 126 09	seat belt automatic		2	
(2)	911 803 183 00	seat-belt buckle	/R -79	1	
(2)	928 803 183 06	seat-belt buckle	/L -79	1	
(2)	928 803 183 05	seat-belt buckle	80-	2	
(2)	928 803 183 05	seat-belt buckle	/R 80-	1	(USA) (CDN)
(2)	928 803 183 06	seat-belt buckle	/L 80-	1	
3	999 025 113 02	washer 11,5 X 21 X 2		X	
3A	211 857 771	washer	80-	4	
4	111 857 793 E	fastening screw		2	
5	111 857 793 E	fastening screw		2	
6	811 857 845	cap		2	
7	211 857 771	washer		4	
8	901 803 144 00	protection washer		2	
9	999 025 113 02	washer 11,5 X 21 X 2		2	
10	911 803 150 00	screw		2	
12	999 025 113 02	washer		2	
13	211 857 771	washer		4	
(13)	928 803 157 02	washer		4	
14	111 857 793 E	fastening screw		2	SC
(14)	111 857 793 E	fastening screw		2	TARGA/CABRIO
15	911 803 233 01	cap	-80	2	
15A	928 803 141 00	cover upper part		2	

Pos	Part Number	Name	Remarks	Qty	Model
15B	928 803 143 00	cover lower part		2	
16	911 803 907 00	set of fastening parts	-79	1	COUPE
(16)	911 803 907 40	set of fastening parts	-79	1	TARGA
(17)	911 555 102 01	bellows		1	
(18)	911 555 615 01	rose		2	COUPE
19	N 014 093 3	tapping screw BZ 4,2 X 13		4	COUPE
20	999 507 020 02	speed nut 4,2		4	COUPE
21	901 803 139 00	rose		2	TARGA
22	911 555 619 40	relay lever		2	TARGA
(22)	911 555 619 60	relay lever	/L	1	CABRIO
(22)	911 555 620 60	relay lever	/R	1	CABRIO
23	900 145 071 07	tapping screw B 3,5 X 13		4	TARGA/CABRIO
(24)	911 555 625 00	support for seatbelt		2	COUPE
(24)	911 501 461 61	support for seatbelt		2	CABRIO
25	911 555 613 41	support for seatbelt		2	TARGA
		- -- E N D -- -			

Model	Year	MG	SG	Illustration	Restrictions	Update	11:35	18.08.2006	PORSCHE PET PORSCHE
911	83	8	12	812-05		203			

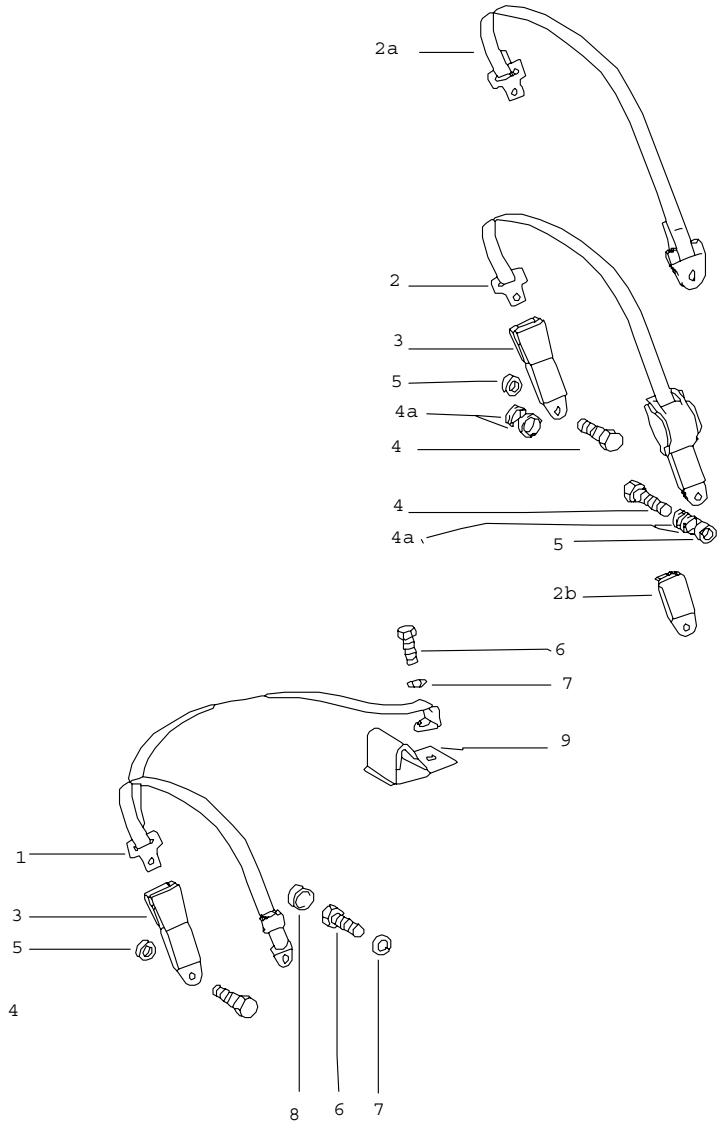

Pos	Part Number	Name	Remarks	Qty	Model
		seat belt rear			
(2)	477 857 787 B	belt automatic	-82	2	
(2)	477 857 787 C	seat belt automatic	81-82	2	(USA)(CDN)
2A	477 857 795	lap belt manual		2	
(2B)	477 857 750 B	cap		2	
3	478 857 739 A	seat-belt buckle	-79	2	(AUS)
(3)	477 857 739 A	seat-belt buckle	-79	2	(F) (J)
(3)	477 857 739 A	seat-belt buckle	80-	2	
4	911 803 451 00	fastening screw		2	
4A	211 857 771	washer		4	
5	901 803 116 40	spacer sleeve		2	
		- -- E N D -- -			

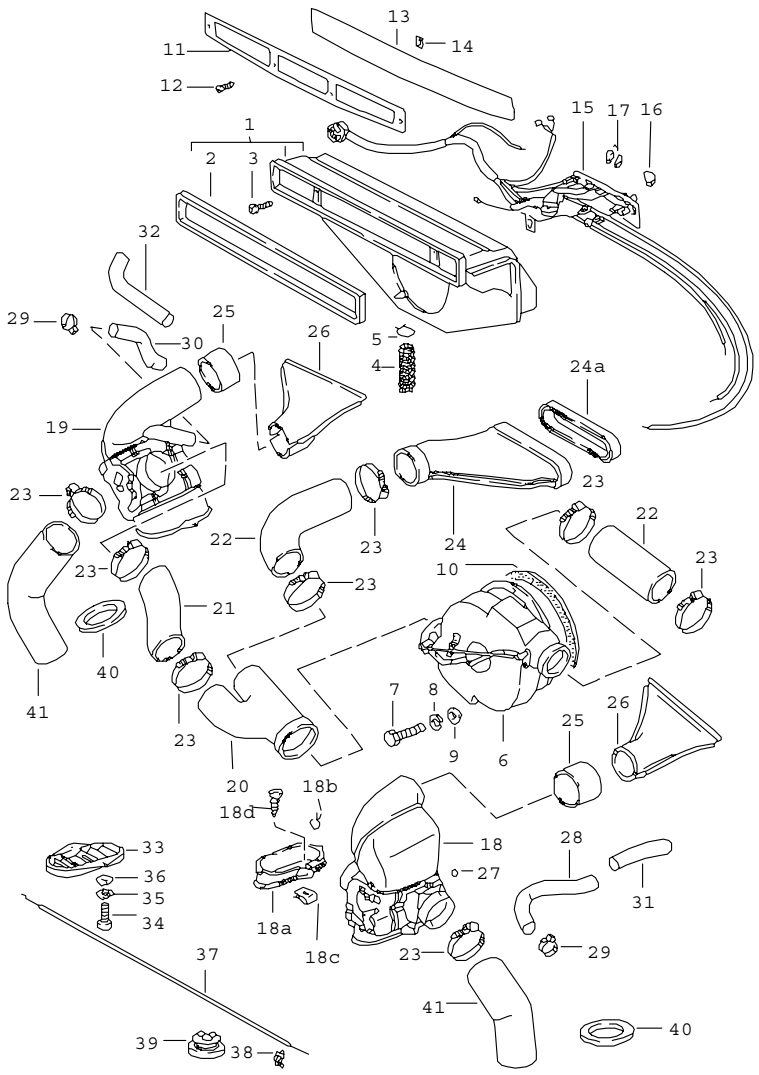

Pos	Part Number	Name	Remarks	Qty	Model
		ventilation heating system 1			
1	A 911 571 031 00	fresh air inlet box	/LL	1	
(1)	911 571 041 01	fresh air inlet box order also: POS. 2, 6-10	/LL	1	
2	901 571 325 32	sealing frame		1	
3	N 014 153 1	oval-head screw M 5 X 40		2	
4	911 571 224 00	water drain hose	/LL	1	
(4)	911 571 224 00	water drain hose		1	
6	911 571 017 00	blower		1	
6	911 571 018 00	blower		1	M 559/573
-	911 571 905 00	housing front		1	
-	911 571 907 00	housing rear		1	
-	911 571 320 32	blower motor		1	
7	N 010 205 6	hexagon-head bolt M 5 X 10		2	
8	900 027 011 01	lock ring B 5		2	
9	900 025 003 02	washer 5,3		2	
10	901 571 922 00	sealing ring		1	
11	911 559 401 00	grille frame		1	
12	N 014 086 12	tapping screw B 3,5 X 13		4	
13	911 559 410 00	grille		1	
14	901 559 491 20	spacer		2	
(15)	911 613 111 08	control switch		1	
-	911 612 172 01	wiring harness for control switch		1	
-	900 631 132 90	bulb 12V, 2W		1	

Pos	Part Number	Name	Remarks	Qty	Model
-	999 632 006 00	bulb holder		1	
-	914 571 903 10	sealing ring		1	
-	N 010 217 9	hexagon-head bolt M 6 X 20		1	
-	N 011 524 7	washer 6,4		1	
-	914 571 151 10	rubber sleeve bowden control		1	
16	901 571 917 00	knob black		1	
16	901 571 918 00	knob red		1	
17	911 613 995 00	knob black		2	
18	911 571 049 07	control box		1	
18A	911 571 051 00	connecting flange		2	
18B	999 512 162 02	clamping spring		4	
18C	999 591 574 02	speed nut B 4,8	82-	4	
18D	900 143 039 02	tapping screw BZ 4,8 X 19	82-	4	
19	911 571 050 07	control box		1	
20	911 571 039 00	distributing piece	/LL	1	
21	911 571 239 00	air hose		1	
22	473 261 233 A	air hose		2	
23	999 512 349 02	hose clamp		8	
24	911 571 085 00	air duct	/LL	1	
24A	911 571 189 00	sealing ring		1	
25	901 571 345 32	hose piece		2	
27	901 571 921 00	retainer		24	
28	911 571 228 00	air hose		1	
29	999 512 551 00	hose clamp		1	
30	911 571 228 00	air hose		1	
(31)	911 572 223 00	air hose		1	
32	911 571 228 00	air hose		1	
33	911 571 347 01	air distributor	/L	1	
(33)	911 571 348 01	air distributor	/R	1	
34	N 044 734 1	pan-head screw M 5 X 15		4	
35	N 012 005 3	lock ring B 5		4	
36	900 025 003 02	washer 5,3		4	
37	911 572 114 00	bowden control		2	
38	901 571 919 00	terminal control box 911.571.050.03		7	
(38)	477 819 343	spring clamp control box 911.571.050.05		4	
39	911 612 863 00	grommet		1	
40	901 572 913 01	sealing ring		2	
41	914 572 123 10	air hose		2	
41	914 572 123 10	air hose	83-	1	TURBO

- -- E N D -- -

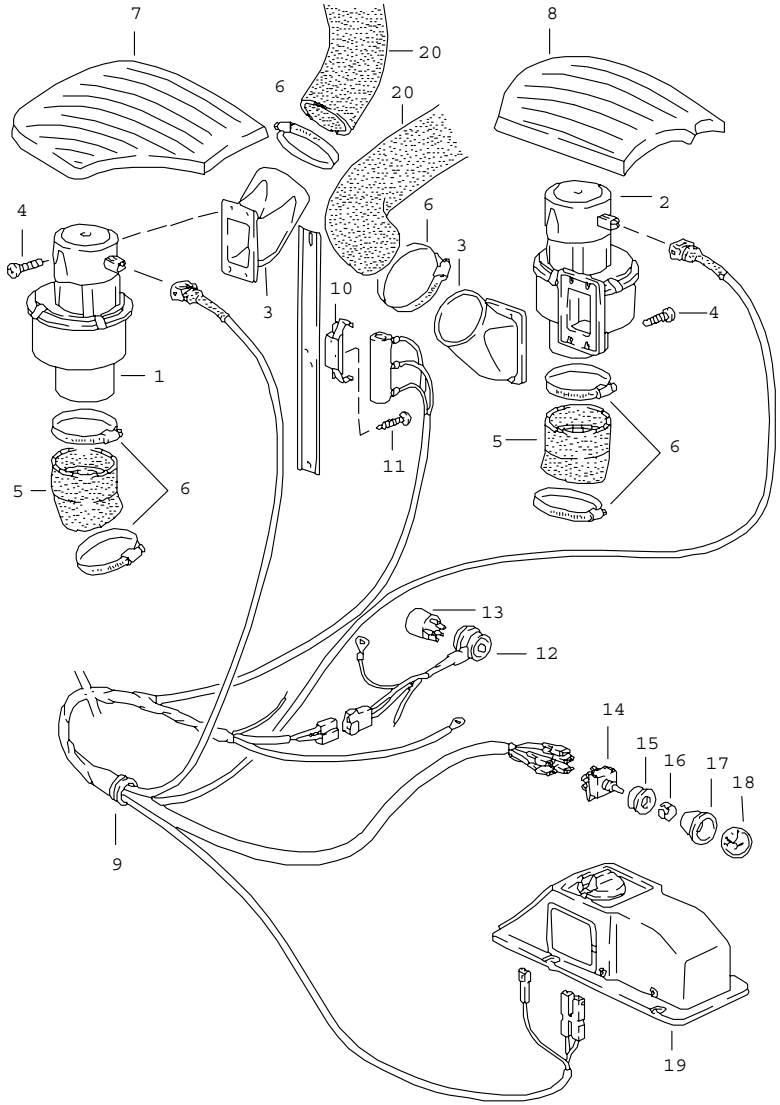

Pos	Part Number	Name	Remarks	Qty	Model
		additional blower	83-		TURBO
1	911 624 043 02	blower	/L	1	
2	911 624 044 02	blower	/R	1	
3	930 571 102 00	connection piece		2	
4	900 146 009 02	oval-head screw M 4 X 12		8	
5	930 571 101 01	intake manifold		2	
6	999 512 349 02	hose clamp		6	
7	930 571 107 00	damping mat	/L	1	
8	930 571 108 00	damping mat	/R	1	
9	930 612 113 01	wiring harness	/LL	1	
(9)	930 612 113 02	wiring harness	/RL	1	
10	930 616 113 00	support		1	
11	900 143 058 02	tapping screw BZ 4,8 X 9,5		2	
12	930 612 115 00	wiring harness		1	
13	911 615 109 01	standard type relay		1	
14	911 613 116 00	blower switch		1	
15	911 613 213 05	rose		1	
16	999 591 557 01	knob holder		1	
17	911 613 141 01	knob		1	
18	911 613 238 02	cap with symbol		1	
19	930 659 049 00	control mechanism		1	
20	914 572 123 10	air hose		2	
		- -- E N D -- -			

Model	Year	MG	SG	Illustration	Restrictions	Update	11:35	18.08.2006	PORSCHE PET PORSCHE
911	83	8	13	813-05		203			

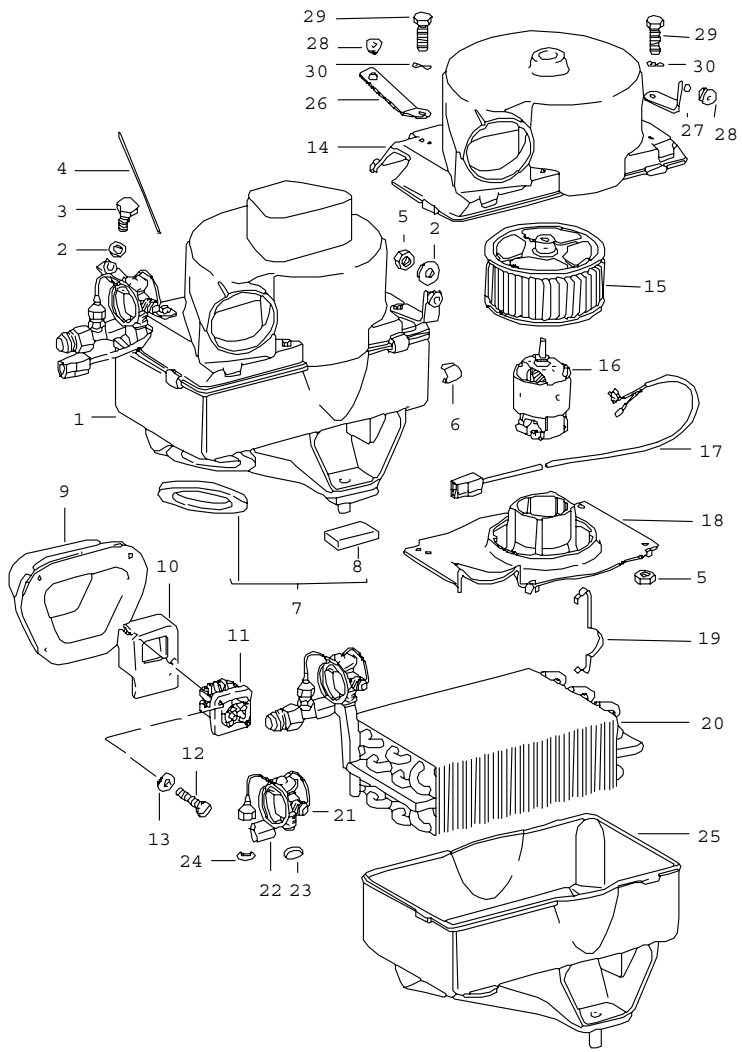

Pos	Part Number	Name	Remarks	Qty	Model
		air conditioner evaporator housing single parts			
-	911 573 001 10	air conditioner	/LL	1	SC:M 559
-	930 573 001 03	air conditioner	/LL	1	TURBO:M 559
1	901 573 021 00	evaporator	/LL	1	
2	900 151 003 02	washer 6,4		2	
3	900 075 057 02	hexagon-head bolt M 6 X 16		1	
4	901 573 903 00	guide tube temperature switch		1	
5	900 076 010 02	hexagon nut M 6		5	
6	901 573 904 00	tensioning spring		4	
7	901 573 901 00	parts kit comprising:	/LL	1	
-	-	sealing ring		1	
8	-	shim		2	
(9)	911 573 073 01	connection piece	/LL	1	
10	478 820 209	bracket	/LL	1	
11	911 618 151 00	thermo bi-metal switch	/LL	1	
12	900 146 011 02	oval-head screw AM 4 X 10	/LL	2	
13	N 012 224 3	spring washer B 4	/LL	2	
14	911 573 023 00	housing cover		1	
15	901 573 906 00	fan		1	
16	901 624 901 00	electric motor		1	
17	-	see group 8/13/40		1	
18	911 573 323 00	engine support		1	
19	901 624 903 00	clamp		4	
20	901 573 907 00	evaporator		1	

Pos	Part Number	Name	Remarks	Qty	Model
21	901 573 915 00	expansion valve		1	
22	901 573 914 00	clip		1	
23	901 573 147 00	gasket 3/4"		1	
24	901 573 916 00	gasket 7/16"		1	
25	901 573 908 00	housing lower part	/LL	1	
26	911 572 473 00	angle	/LL	1	
27	911 572 471 00	angle	/LL	1	
28	901 573 133 00	rubber sleeve		2	
29	N 010 217 9	hexagon-head bolt M 6 X 20		4	
30	N 012 226 5	spring washer B 6		4	
		- -- E N D -- -			

Pos	Part Number	Name	Remarks	Qty	Model

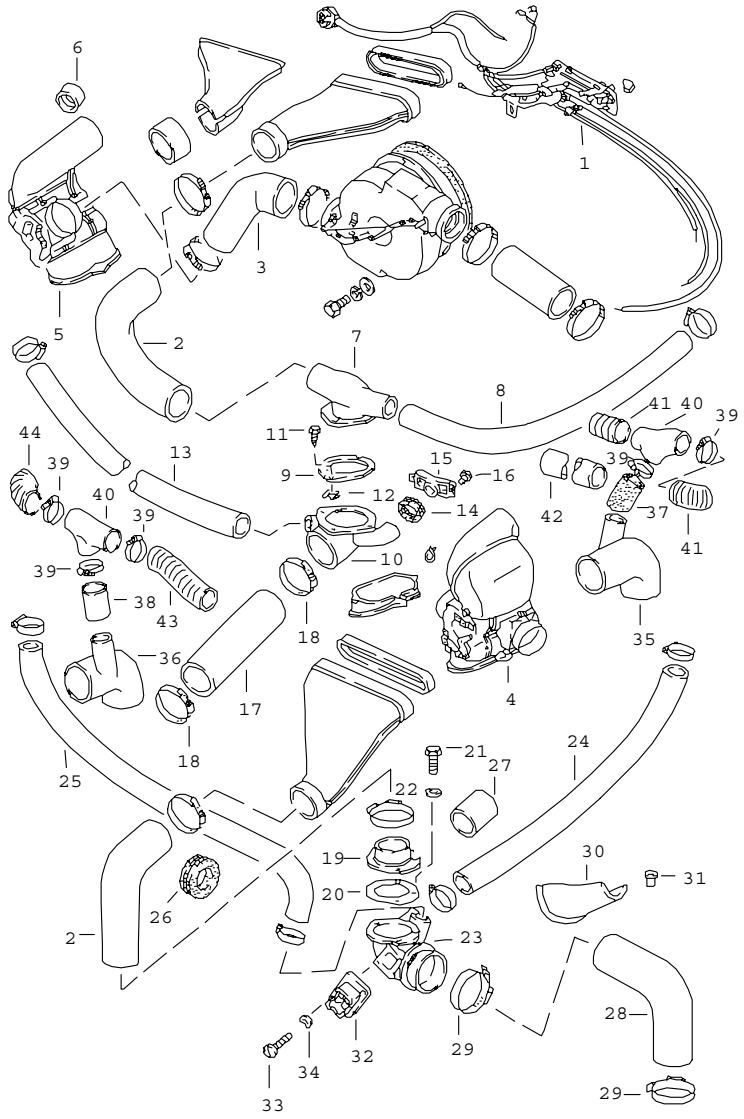

Pos	Part Number	Name	Remarks	Qty	Model
		cooling air duct control switch			
(1)	911 613 111 08	control switch		1	
2	911 571 243 00	air hose		1	
3	473 261 233 A	air hose		1	
4	911 571 049 07	control box		1	
5	911 571 050 07	control box		1	
6	911 573 207 00	closure for adapter	/LL	1	
7	911 573 179 00	air distributor	/LL	1	
8	911 573 204 00	air hose	/LL	1	
9	911 573 173 00	gasket	/LL	1	
10	911 573 181 00	connecting piece	/LL	1	
11	900 187 014 02	hexagon-head tapping screw B 4,2 X 16	/LL	3	
12	999 591 457 02	speed nut B 4,2	/LL	3	
13	911 571 228 00	air hose	/LL	1	
14	911 573 185 00	rubber sleeve	/LL	2	
15	911 573 183 00	footwell outlet vent	/LL	1	
16	N 010 207 6	hexagon-head bolt M 5 X 12	/LL	2	
17	911 571 240 01	air hose	/LL	1	
18	999 512 351 02	hose clamp	/LL	2	
35	911 573 231 00	air distributor lower	/L 82-	1	
36	911 573 232 00	air distributor lower	/R 82-	1	
37	911 573 210 00	air hose	82-	1	
38	911 573 213 00	air hose	82-	1	
39	999 512 551 00	hose clamp	82-	5	
40	911 573 235 00	air distributor upper	82-	2	COUPE

Pos	Part Number	Name	Remarks	Qty	Model
40	911 573 235 00	air distributor upper	/R 82-	1	TARGA/ CABRIO
(40)	911 573 233 00	air distributor upper	/L 82-	1	TARGA/ CABRIO
41	911 573 212 00	air hose	82-	2	
43	911 573 203 00	air hose	/LL 82-	1	
44	911 573 211 00	air hose	82-	1	
		- -- E N D -- -			

Pos	Part Number	Name	Remarks	Qty	Model

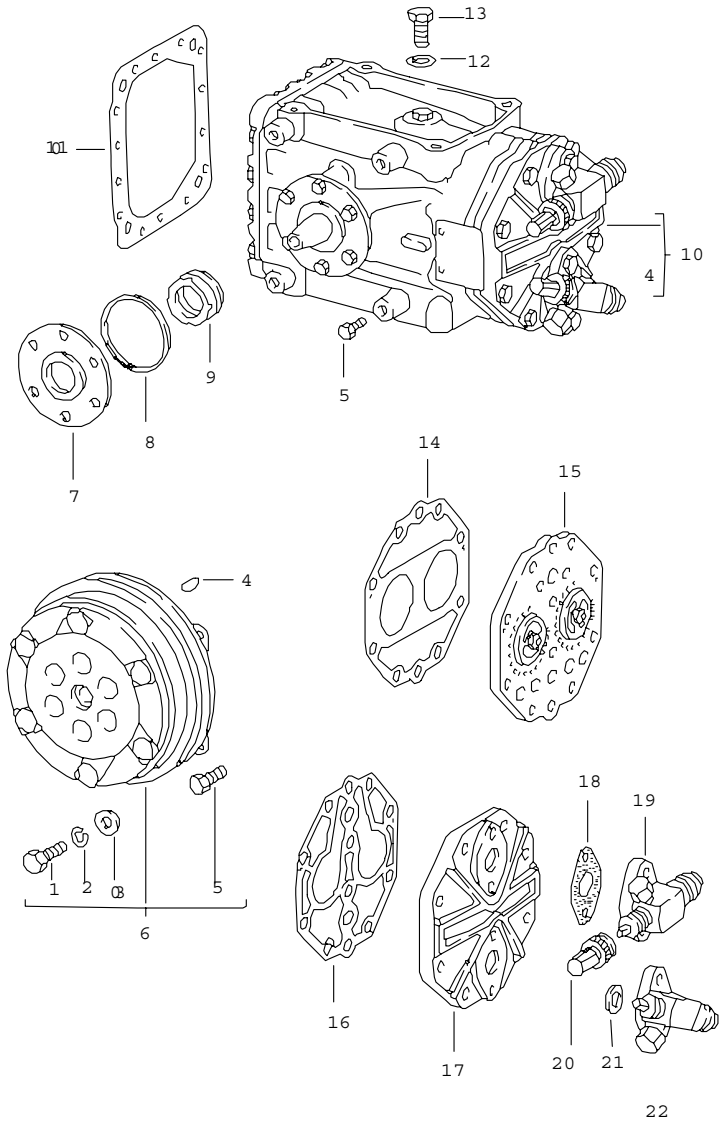

Pos	Part Number	Name	Remarks	Qty	Model
		compressor			911 SC
1-5	911 126 924 00	set of fastening parts comprising:		1	
		hexagon-head bolt 5/16" -24 UNF-1 1/2"		1	
2	-	lock ring B 8		1	
3	-	washer 8 X 22 X 4		1	
4	-	woodruff key 4 X 6,5		1	
5	-	hexagon-head bolt 1/4" -20 UNC-2 AX 1/2"		4	
6	911 126 933 01	clutch		1	
7-9	911 126 931 00	parts kit comprising:		1	
7	-	flange		1	
8	-	gasket		1	
9	-	gasket		1	
10	911 126 901 00	compressor		1	
11	911 126 911 00	gasket		1	
12	911 126 913 00	o-ring		2	
13	911 126 912 00	hexagon-head bolt 3/8" X 15		1	
14-16	911 126 917 00	parts kit comprising:		1	
14	-	gasket		1	
15	-	valve plate		1	
16	-	gasket		1	
-	911 126 918 00	parts kit comprising:		1	
		gasket		1	
16	-	gasket		1	
17	-	cover		1	
-	911 126 916 00	parts kit comprising:		1	

Model	Year	MG	SG	Illustration	Restrictions	Update			
911	83	8	13	813-15		203	11:36	18.08.2006	PORSCHE PET PORSCHE

Pos	Part Number	Name	Remarks	Qty	Model	Pos	Part Number	Name	Remarks	Qty	Model
14	-	gasket		1							
16	-	gasket		1							
18	911 126 919 00	sealing ring		1							
19	911 126 921 00	flange valve		1							
20	911 126 923 00	cap		1							
21	911 126 919 00	sealing ring		1							
22	911 126 922 00	flange valve		1							
		- -- E N D -- -									

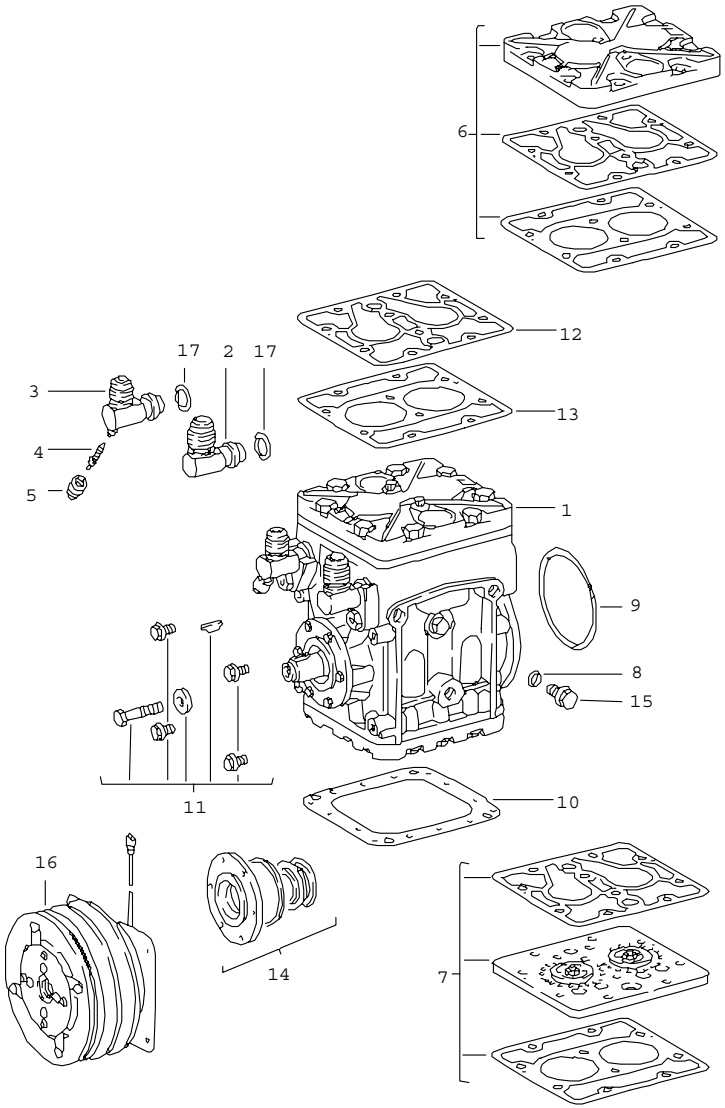

Pos	Part Number	Name	Remarks	Qty	Model
		YORK compressor			TURBO
1	930 126 901 00	compressor		1	
2	930 573 912 00	suction valve		1	
3	930 573 913 00	pressure valve		1	
4	928 573 908 03	valve insert		1	
5	928 573 909 02	cap		1	
6	930 573 901 00	cover set		1	
7	930 573 902 00	valve plate set		1	
8	911 126 913 00	o-ring		1	
9	930 573 904 00	sealing ring		1	
10	930 573 905 00	gasket		1	
11	911 126 924 00	set of fastening parts clutch		1	
12	930 573 907 00	gasket cylinder head		1	
13	930 573 908 00	gasket valve plate		1	
14	911 126 931 00	parts kit crankshaft		1	
15	930 573 910 00	oil filler screw		1	
16	911 126 933 00	clutch		1	
17	999 701 424 40	round seal 15,6 X 1,78		2	
		- -- E N D -- -			

Model	Year	MG	SG	Illustration	Restrictions	Update	11:36	18.08.2006	PORSCHE PET PORSCHE
911	83	8	13	813-25		203			

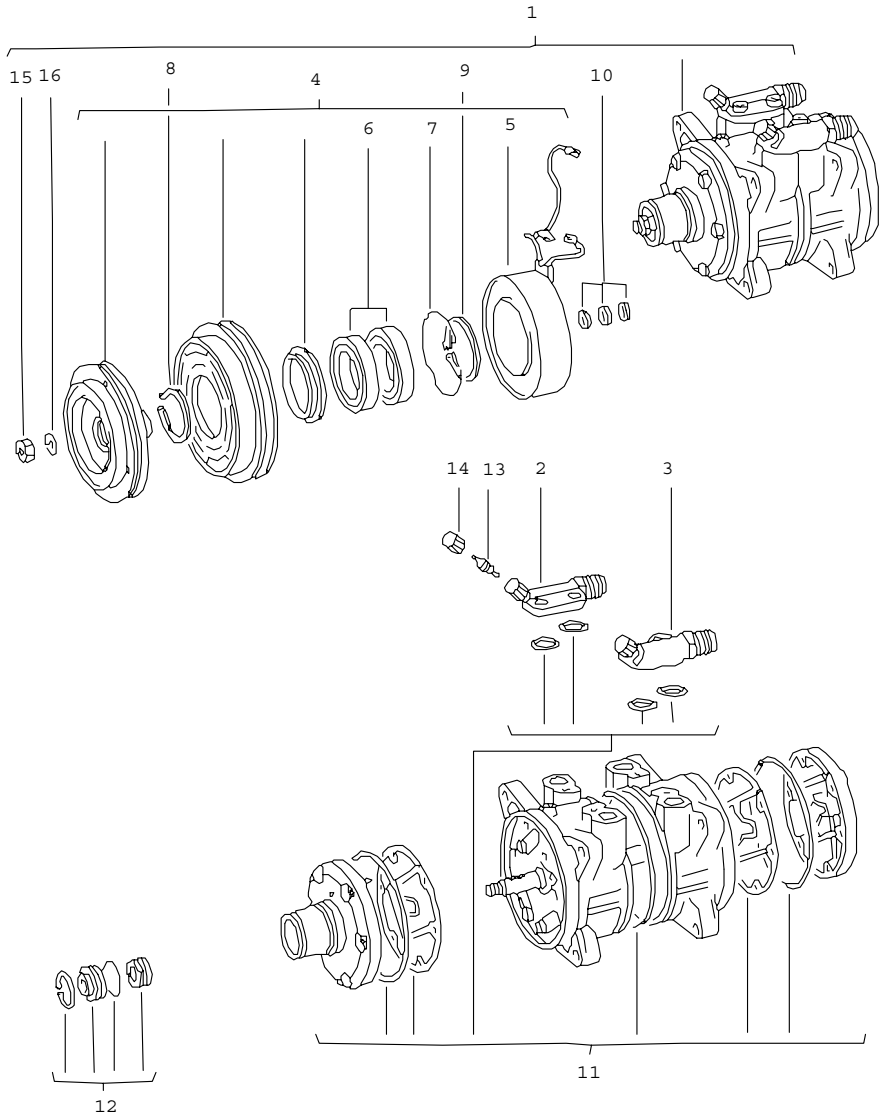

Pos	Part Number	Name	Remarks	Qty	Model
		NIPPONDENSO compressor			TURBO
1	930 126 010 00	compressor complete		1	
2	477 298 839	pressure valve		1	
3	477 298 837	suction valve		1	
4	477 298 823	clutch		1	
5	477 298 825	solenoid coil		1	
6	477 298 831	set of bearings		1	
7	477 298 827	retaining spring		1	
8	477 298 841	circlip		1	
9	477 298 843	circlip		1	
10	477 298 829	spacer 0,1 MM		X	
(10)	477 298 829 A	spacer 0,2 MM		X	
(10)	477 298 829 B	spacer 0,5 MM		X	
(10)	477 298 829 C	spacer 0,8 MM		X	
(10)	477 298 829 B	spacer 1,0 MM		X	
11	477 298 833	set of seals		1	
12	477 298 835	set of seals		1	
13	928 573 908 03	valve insert		2	
14	928 573 909 02	cap		2	
15	N 011 008 8	hexagon nut M 8		1	
16	900 027 015 02	lock ring B 8		1	
		- -- E N D -- -			

Model	Year	MG	SG	Illustration	Restrictions	Update			
911	83	8	13	813-30		203	11:36	18.08.2006	PORSCHE PET PORSCHE

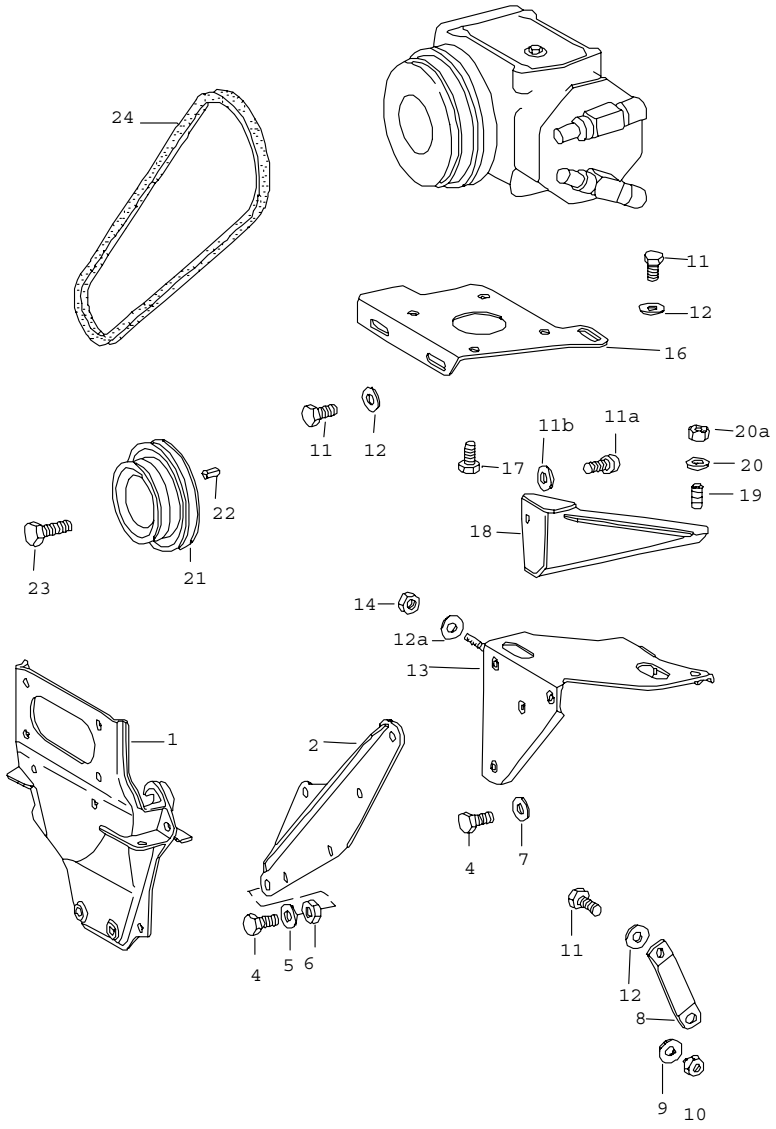

Pos	Part Number	Name	Remarks	Qty	Model
		YORK compressor mounting and driving mechanism			
1	-	see group 1/09/00		1	
2	930 126 115 00	strut		1	SC
(2)	930 126 115 01	strut		1	TURBO
4	999 075 041 02	hexagon-head bolt M 10 X 20		4	
5	900 025 008 09	washer 10,5		2	
6	900 157 002 02	hexagon nut M 10		2	
7	900 025 008 09	washer 10,5		2	
8	911 126 124 01	strut		1	
9	900 031 014 30	washer 8,4		1	
10	964 126 125 20	nut		1	
11	900 075 085 02	hexagon-head bolt	-81	4	SC
11	900 075 085 02	hexagon-head bolt M 8 X 20	-81	1	TURBO
(11)	900 119 030 02	pan-head screw	82-	3	SC
11	900 075 085 02	hexagon-head bolt M 8 X 20	82-	3	TURBO
(11)	900 075 079 02	hexagon-head bolt M 8 X 22		3	TURBO
11A	900 119 057 02	pan-head screw	-81	2	SC
11A	900 119 057 02	pan-head screw M 8 X 20	-81	1	TURBO
11A	999 218 004 02	pan-head screw M 8 X 30	82-	1	
11B	900 025 007 02	washer 8,4		1	
12	900 025 007 02	washer 8,4		6	SC

Pos	Part Number	Name	Remarks	Qty	Model
(12)	900 223 001 02	washer 8,4		6	TURBO
12A	900 223 001 02	washer 8,4		1	
13	911 126 101 01	bracket		1	SC
(13)	930 126 101 02	bracket		1	TURBO
-	930 126 103 00	screw M 8 X 25		1	TURBO
-	900 906 007 00	snap ring A 10		1	TURBO
14	900 076 025 02	hexagon nut		2	SC
14	900 076 025 02	hexagon nut M 8		3	TURBO
16	911 126 117 01	compressor plate		1	SC
(16)	930 126 117 02	compressor plate		1	TURBO
-	900 075 103 02	adjusting screw M 8 X 50		1	TURBO
17	999 075 021 02	screw 3/8"16 UNC - 2AX 3/4"		4	SC
(17)	999 075 033 02	hexagon-head bolt 3/8"16 UNC-2AX 3/4"		4	TURBO
18	930 126 116 00	angle	-81	1	SC
(18)	930 126 116 00	angle	-81	1	TURBO
18	930 126 116 00	angle	82-	1	
19	999 062 003 02	stud BM 6 X 18	-81	2	
19	999 062 127 02	stud BM 6 X 25	82-	2	
-	N 011 666 7	washer 6,4	-81	2	
-	930 126 135 01	washer 6,1	82-	2	
20	999 025 070 02	washer 6,4	-81	2	
20	N 011 666 7	washer 6,4	82-	2	
20A	900 910 096 02	lock nut VM 6		2	
21	-	pulley see group 1/02/00			
22	-	straight pin see group 1/02/00			
23	-	hexagon-head bolt see group 1/02/00			
24	900 192 027 50	narrow v-belt		1	SC
24	999 192 305 50	narrow v-belt		1	TURBO
		mount compressor for charge air cooler			
-	930 126 141 00	strut		1	
-	930 126 143 00	spacer		1	
-	N 010 361 4	hexagon-head bolt M 8 X 65		1	
-	900 025 008 09	washer 10,5		1	
-	999 075 021 02	hexagon-head bolt 3/8"16 UNC - 2A X3/4"		1	
		- -- E N D -- -			

Model	Year	MG	SG	Illustration	Restrictions	Update				
911	83	8	13	813-35		203	11:37	18.08.2006	PORSCHE	PET	PORSCHE

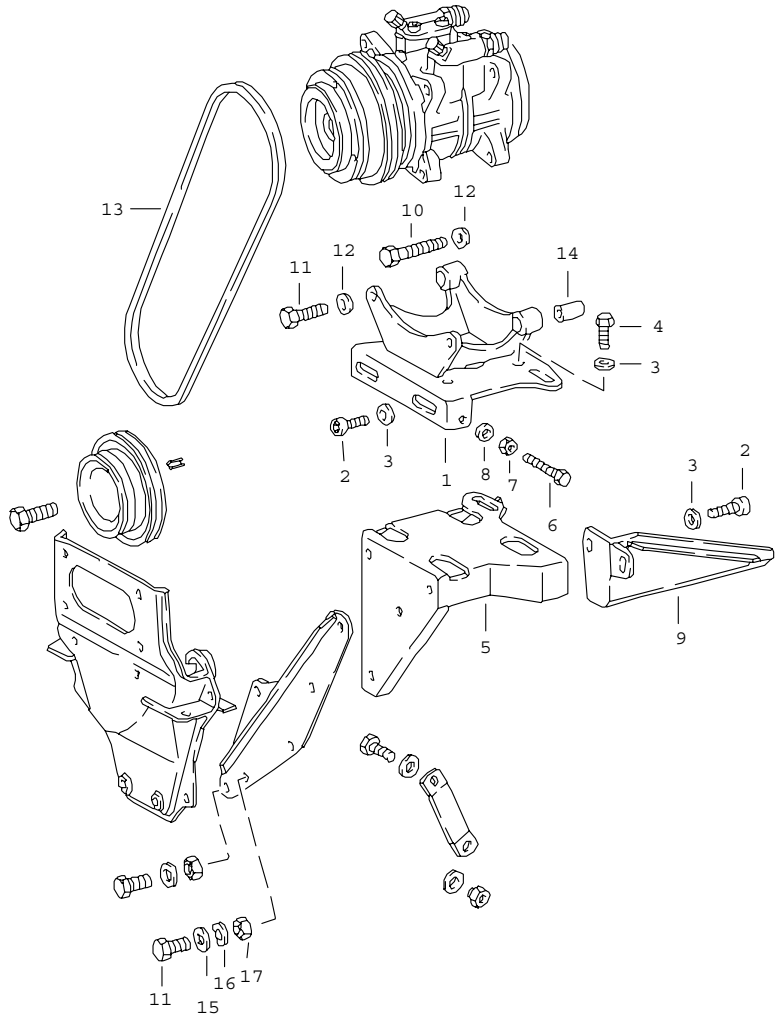

Pos	Part Number	Name	Remarks	Qty	Model
		NIPPONDENSO compressor mounting and driving mechanism			TURBO
1	930 126 117 04	compressor plate		1	
1A	930 126 125 00	sleeve		2	
2	900 119 057 02	pan-head screw M 8 X 20		3	
3	900 223 001 02	washer 8,4		4	
4	900 075 085 02	hexagon-head bolt M 8 X 20		1	
5	930 126 101 02	bracket		1	
6	900 075 103 02	adjusting screw M 8 X 50		1	
7	900 076 025 02	hexagon nut M 8		1	
8	900 025 007 02	washer 8,4		1	
9	930 126 116 00	angle		1	
10	900 082 088 02	hexagon-head bolt M 10 X 1,25 X 50		2	
11	900 083 053 02	hexagon-head bolt M 10 X 1,25 X 25		2	
12	900 025 008 09	washer 10,5		4	
13	999 192 173 50	narrow v-belt		1	
14	900 075 087 02	hexagon-head bolt M 8 X 16		2	
15	900 025 007 02	washer 8,4		2	
16	N 012 229 3	spring washer A 8		2	
17	900 910 097 02	lock nut M 8		2	
		- -- E N D -- -			

Model	Year	MG	SG	Illustration	Restrictions	Update	11:37	18.08.2006	PORSCHE PET PORSCHE
911	83	8	13	813-40		203			

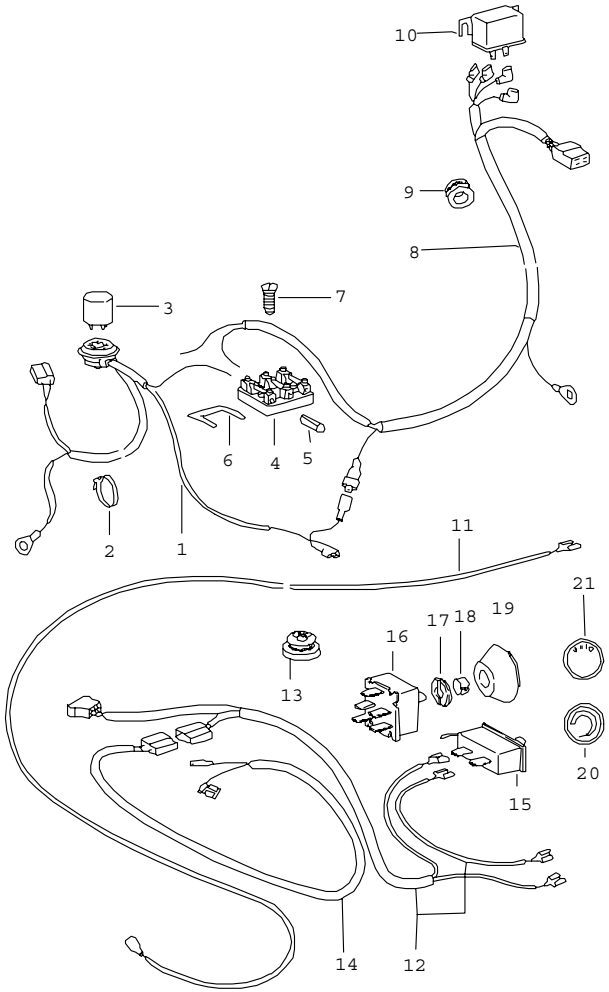

Pos	Part Number	Name	Remarks	Qty	Model
		electric equipment for air conditioner			
1	911 612 080 01	wiring harness NR. 80		1	M 559
(1)	911 612 080 02	wiring harness NR. 80		1	TURBO:M 573
2	999 513 008 40	tie-wrap		1	M 559
3	911 615 109 01	standard type relay		1	M 559
4	911 612 093 05	fuse box triple		1	
5	N 017 121 5	safety fuse 25 A		1	
6	901 612 835 01	connecting rail		1	
7	900 146 009 02	oval-head screw AM 4 X 12		2	
8	911 612 078 01	wiring harness NR. 78		1	
9	999 702 119 50	rubber sleeve		1	
10	911 615 103 01	relay		1	
11	911 612 079 00	wiring harness NR. 79		1	
12	911 612 029 01	wiring harness NR. 29		1	
13	911 612 863 00	grommet		1	
14	901 612 084 00	wiring harness NR. 28		1	
15	911 613 121 01	temperature switch		1	
16	911 613 116 00	blower switch		1	
17	911 613 119 01	rose for POS.16		1	
17	911 613 120 01	rose for POS.15		1	
18	999 591 557 01	knob holder		2	
19	911 613 141 00	knob		2	

Pos	Part Number	Name	Remarks	Qty	Model	Pos	Part Number	Name	Remarks	Qty	Model
(20)	911 613 237 02	cap with symbol		1							
(21)	911 613 238 02	cap with symbol		1							
		- -- E N D -- -									

Model	Year	MG	SG	Illustration	Restrictions	Update				
911	83	8	13	813-45		203	11:37	18.08.2006	PORSCHE	PET	PORSCHE

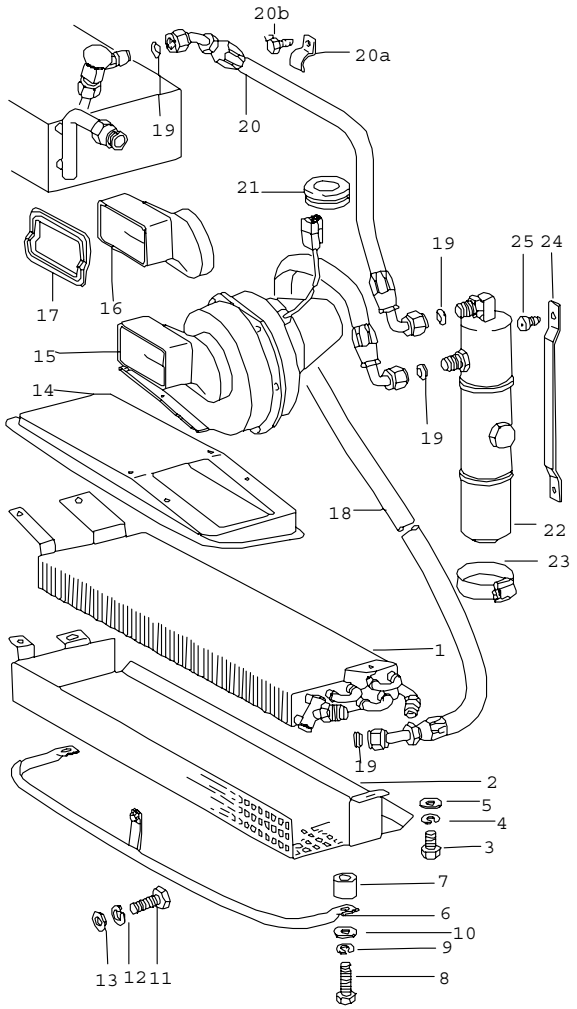

Pos	Part Number	Name	Remarks	Qty	Model
		condenser refrigerant line accessories and others front			
1	911 573 056 02	condenser		1	
(2)	911 573 058 01	stone guard		1	
3	900 075 057 02	hexagon-head bolt M 6 X 16		3	
4	N 012 007 2	lock ring B 6		3	
5	N 011 524 7	washer 6,4		3	
6	911 573 055 00	protection		1	
7	911 573 513 01	spacer		2	
8	N 040 281 1	hexagon-head bolt M 10 X 45		2	
9	900 027 016 02	lock ring B 10		2	
10	900 151 026 02	washer B 10,5 X 30		2	
11	900 075 085 02	hexagon-head bolt M 8 X 20		1	
12	900 027 015 02	lock ring B 8		1	
13	900 025 007 02	washer B 8,4		1	
14	911 501 581 01	air baffle		1	
(15)	911 624 013 01	blower		1	
16	911 573 161 00	intake manifold		1	
17	911 573 515 00	gasket		1	
18	911 573 154 02	hose NW 8		1	
19	901 573 148 00	gasket 5/8"		4	
(20)	911 573 152 02	hose	/LL	1	
20A	999 511 061 02	clamp		4	

Pos	Part Number	Name	Remarks	Qty	Model
20B	900 187 025 02	hexagon-head tapping screw B 5,5 X 13		2	
20B	900 075 145 02	hexagon-head bolt M 5 X 16		2	
-	N 011 005 14	hexagon nut M 5		2	
21	901 573 143 00	rubber sleeve		1	
22	911 573 939 02	desiccator		1	
-	911 615 152 00	thermostat		1	M 399
23	901 573 141 00	hose clamp		2	
24	901 573 140 00	holder		1	
25	900 143 029 02	oval-head sheetmetal screw B 4,2 X 16		2	
		- -- E N D -- -			

Pos	Part Number	Name	Remarks	Qty	Model

Model	Year	MG	SG	Illustration	Restrictions	Update	11:37	18.08.2006	PORSCHE PET PORSCHE
911	83	8	13	813-50		203			

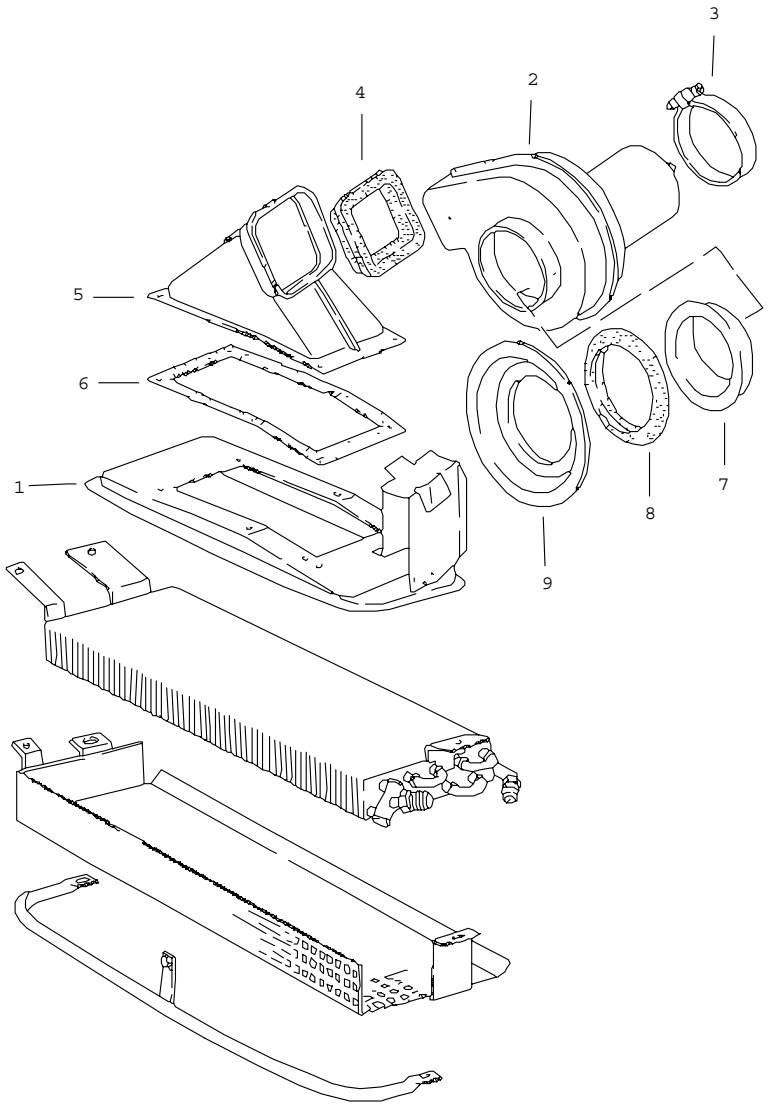

Pos	Part Number	Name	Remarks	Qty	Model
		fan front	/RL		M 573
1	930 501 057 00	air baffle		1	
2	911 624 151 05	fan		1	
3	999 512 244 02	clip		1	
4	930 573 171 01	gasket		1	
5	930 573 065 00	air duct		1	
6	930 573 173 00	gasket		1	
7	930 573 511 00	intake manifold		1	
8	930 573 517 01	gasket		1	
9	930 501 593 00	insert		1	
		- -- E N D -- -			

Model	Year	MG	SG	Illustration	Restrictions	Update	11:37	18.08.2006	PORSCHE PET PORSCHE
911	83	8	13	813-55		203			

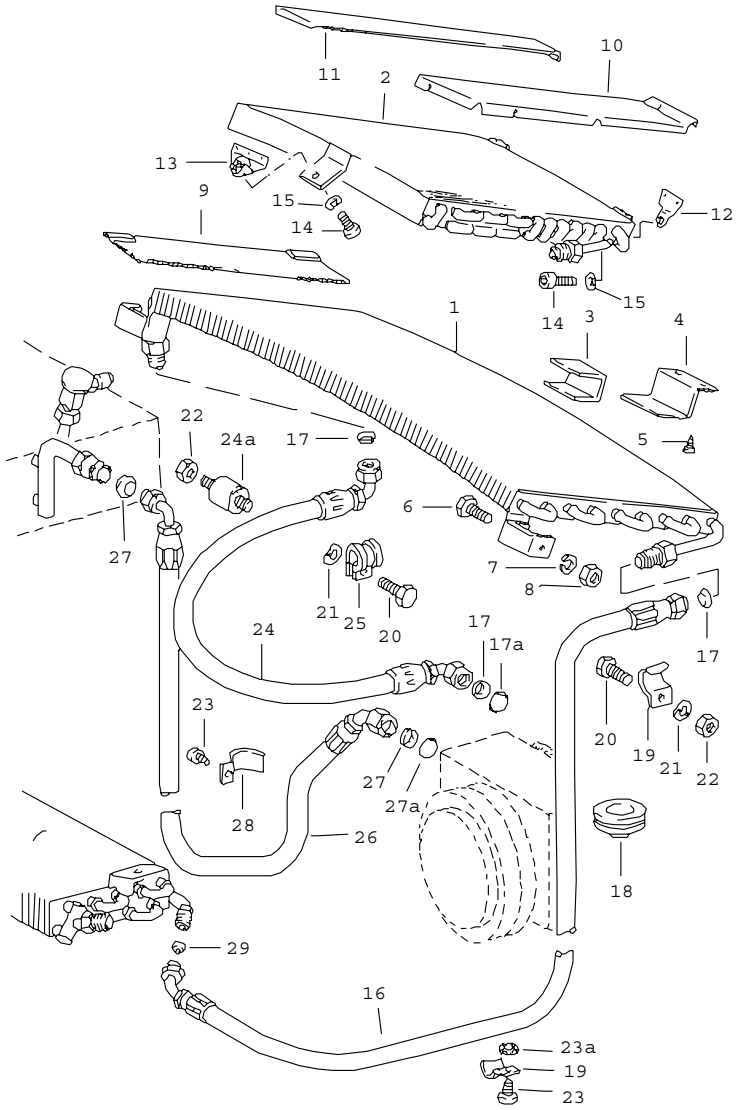

Pos	Part Number	Name	Remarks	Qty	Model
		condenser refrigerant line accessories and others rear			
1	911 573 057 02	condenser		1	SC
2	930 573 053 00	condenser		1	TURBO
3	901 573 138 00	moltoprene shim 6 X 65 X 85		1	SC
(4)	911 573 147 00	bracket		1	SC:M 559
(4)	911 573 059 00	holder		1	
5	900 143 049 07	tapping screw B 3,5 X 9,5		2	
6	N 010 204 4	hexagon-head bolt M 4 X 10	-80	2	
6	900 075 145 02	hexagon-head bolt M 5 X 15	81-	2	
7	900 027 011 01	lock ring B 4	-80	2	
(7)	900 025 003 02	washer A 5,3	81-	2	
8	N 011 004 6	hexagon nut M 4	-80	2	
(8)	999 507 248 02	speed nut M 5	81-	2	
9	911 573 027 00	cover plate		2	
10	930 512 263 00	cover plate		1	TURBO
11	930 512 264 00	cover plate		1	TURBO
12	930 512 047 01	support		2	TURBO
13	930 512 258 00	angle		1	TURBO
14	900 067 008 02	pan-head screw M 6 X 12		3	TURBO
15	N 012 226 5	spring washer A 6		3	TURBO
(16)	911 573 151 00	hose NW 10, 3280 MM		1	SC:M 399
16	911 573 153 03	hose NW 10		1	SC:M 559

Pos	Part Number	Name	Remarks	Qty	Model
(16)	930 573 151 01	hose NW 10		1	TURBO
17	901 573 147 00	gasket 3/4"		3	
17A	999 707 250 40	o-ring		1	TURBO
18	901 573 143 00	rubber sleeve		1	
19	911 573 144 00	clamp		18	
(19)	999 511 061 02	clamp		10	
20	N 010 207 6	hexagon-head bolt M 5 X 12		2	
20	N 010 209 5	hexagon-head bolt M 5 X 25		1	TURBO
-	911 573 517 00	spacer sleeve		2	TURBO
21	N 012 005 3	lock ring B 5		2	
22	N 011 005 14	hexagon nut M 5		2	
23	900 187 023 02	hexagon-head tapping screw B 5,5 X 16		16	
(23)	900 075 145 02	hexagon-head bolt M 5 X 16		11	
-	900 076 027 02	hexagon nut M 5		11	
-	N 012 005 3	lock ring B 5		11	
23A	999 704 134 40	sealing washer		13	
-	901 543 423 00	protective edging		1	TURBO
24	911 573 150 02	hose NW 10		1	SC
(24)	930 573 150 01	hose	-79	1	TURBO
(24)	930 573 150 03	hose NW 10 for NIPPONDENSO compressor		1	TURBO
24A	999 703 312 00	bonded rubber buffer $=15 MM M 5 X 10		1	TURBO
25	999 511 061 02	clamp		1	SC
25	999 512 080 02	hose clamp		2	TURBO
(26)	911 573 149 02	hose NW 13		1	SC
(26)	930 573 149 00	hose NW 13	-79	1	TURBO
(26)	930 573 149 01	hose NW 13 for NIPPONDENSO compressor		1	TURBO
27	901 573 146 00	gasket 7/8"		2	
27A	999 707 251 40	o-ring		1	TURBO
28	911 573 145 00	clamp		10	
(28)	999 511 080 02	clamp		2	
29	901 573 148 00	gasket 5/8"		1	

- -- E N D -- -

Model	Year	MG	SG	Illustration	Restrictions	Update		
911	83	8	98	898-00		203	11:38	18.08.2006

Pos	Part Number	Name	Remarks	Qty	Model
		repair kits			
>>	> 911 538 901 14	set of locks		1	SC:COUPE
		chrome			
>>	> 911 538 901 14	set of locks		1	SC:COUPE
		chrome			
		comprising:			
		outer door handle	/L	1	
		outer door handle	/R	1	
		main key		1	
		without			
		battery			
		main key		1	
		secondary key		1	
		steering lock		1	
		with			
		buzzer contact			
		glove compartment lock			
>>	> 911 538 901 13	set of locks		1	COUPE
		black			
		comprising:			
		outer door handle	/L	1	
		outer door handle	/R	1	
		steering lock		1	
		lock		1	
		replacement key		3	
		with			
		key cap			
		glove compartment lock		1	
		use also:			
-	944 538 041 00	key lamp		2	
>>	> 911 538 901 14	set of locks		1	TARGA/CABRIO
		chrome			
>>	> 911 538 901 14	set of locks		1	TARGA/CABRIO
		chrome			
		comprising:			
		outer door handle	/L	1	
		outer door handle	/R	1	
		main key		1	
		without			
		battery			
		main key		1	
		secondary key		1	
		steering lock		1	
		with			
		buzzer contact			
		glove compartment lock		1	
		lock		1	

Model	Year	MG	SG	Illustration	Restrictions	Update		
911	83	8	98	898-00		203	11:38	18.08.2006

Pos	Part Number	Name	Remarks	Qty	Model
>>	> 911 538 901 13	set of locks black comprising:		1	TARGA/ CABRIO
		steering lock		1	
		outer door handle	/L	1	
		outer door handle	/R	1	
		glove compartment lock		1	
		lock		1	
		replacement key with key cap		3	
		fuel tank cap lockable		1	
		use also:			
-	944 538 041 00	key lamp		2	
		- -- E N D -- -			

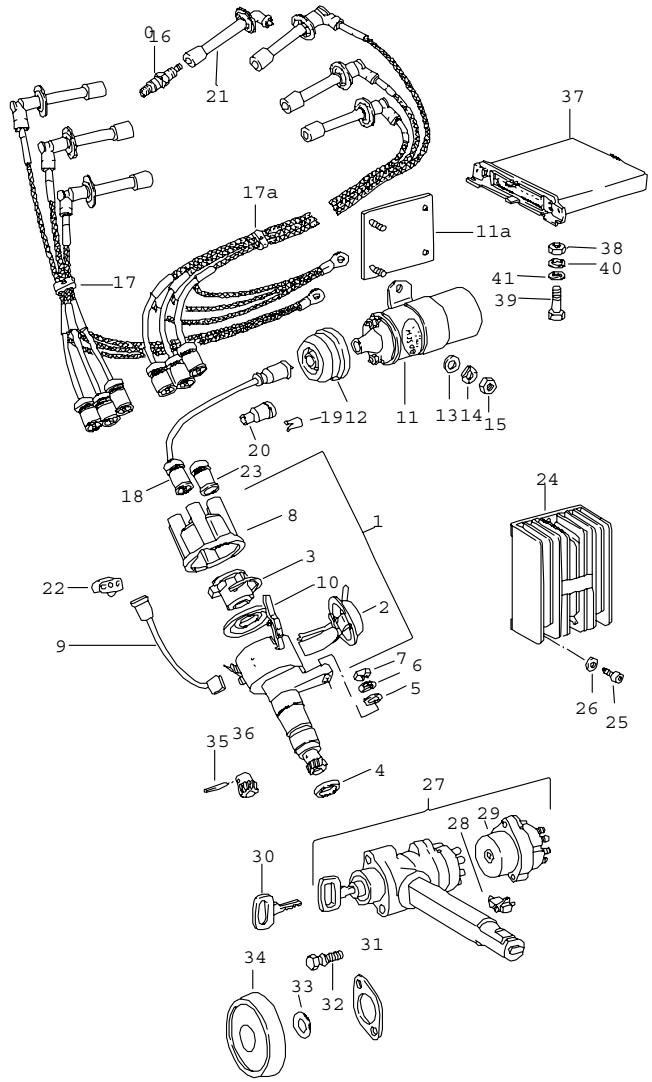

Pos	Part Number	Name	Remarks	Qty	Model
		engine electric. equipment steering lock			
(1)	930 602 021 02	distributor	-79	1	SC 930.04/05/15 /06
(1)	930 602 021 06	distributor	80-	1	SC 930.07/08/16 /17
(1) A	930 602 101 07	distributor		1	TURBO 930.61/62
(1)	930 602 101 08	distributor		1	TURBO 930.61/62/63 /64/65
(1) >	930 602 103 00	distributor		1	TURBO 930.66
2	930 602 910 00	vacuum unit		1	SC 930.04/05/06 /15
2	930 602 915 01	vacuum unit	80-	1	SC 930.07/08/16 /17
(2)	930 602 915 00	vacuum unit		1	TURBO 930.61/62/63 /64/65
(2)	930 602 917 00	vacuum unit		1	TURBO 930.66
(3)	930 602 902 00	rotor f.ignition distributor 930.602.021.02/06		1	SC
(3)	930 602 901 01	rotor f.ignition distributor 930.602.101.07/08		1	TURBO
4	911 602 102 01	sealing ring		1	
5	900 025 007 02	washer B 8,4		1	
6	N 012 241 8	spring washer B 8 X 15		1	
7	900 076 025 02	hexagon nut M 8		1	
8	930 602 904 00	distributor cap		1	
9	930 602 907 01	electric line		1	

Pos	Part Number	Name	Remarks	Qty	Model
10	930 602 909 00	dust cover		1	
11	901 602 502 00	ignition transformer		1	
11A	901 126 121 01	mounting plate		1	SC M 399/559
12	911 602 801 00	protection cap		1	
13	900 025 007 02	washer 8,4		2	
14	N 012 241 8	spring washer B 8 X 15		2	
15	900 076 025 02	hexagon nut M 8		2	
16	A 999 170 055 90	spark plug 225 EA 0,7	80-	6	SC
16	999 170 165 90	spark plug 225 EA 0,7	80-	6	SC
16	999 170 170 90	spark plug 145 EA 0,8	-79	6	SC
16	A 999 170 136 90	spark plug 145 EA 0,8	-79	6	SC
16	999 170 128 90	spark plug 280 EA 0,6		6	TURBO
17	911 609 011 07	set ignition cables	/L	1	
17A	911 609 010 07	set ignition cables	/R	1	
18	911 609 061 07	ignition lead distributor ignition transformer		1	
19	911 609 510 00	cable plug		1	
20	999 659 001 40	protective cap		1	
21	911 602 315 00	spark plug socket		6	
22	901 609 591 00	cable holder		4	
23	122 035 281	suppressor cap		7	
24	> 930 602 702 00	switch unit		1	
25	N 014 703 2	pan-head screw M 6 X 18		3	
26	900 031 011 02	washer 6,4		3	
27	911 613 902 02	steering lock w/o stipulated lock number		1	
27	911 613 904 02	steering lock with stipulated lock-no.		1	
28	911 613 125 00	buzzer contact		1	
29	911 613 017 01	ignition starter switch		1	
30	-	main key secondary key see group 8/04/00			
31	911 347 359 01	reinforcement plate		1	
32	999 219 017 02	shear bolt		2	
33	911 613 169 00	washer cover steering lock		1	
34	911 613 160 00	rose for steering lock		1	
-	999 190 123 02	blind rivet		2	
35	930 602 922 00	pin		1	
36	930 602 422 02	pinion		1	911.03/13 930.60/61/62
(36)	930 602 422 03	pinion		1	911.04/05/06 /15
(36)	930 602 422 90	special pinion see technical information GR. 2 NR. 19 12.12.1977		1	911.03/13 930.60/61/62
(36)	930 602 422 91	special pinion see technical information GR. 2 NR. 19 12.12.1977		1	911.04/05/06 /14/15
37	931 617 101 00	electrical control unit oxygen sensor	-80 81-	1	SC (USA) (J)
(37)	911 617 103 00	electrical control unit oxygen sensor	81-	1	(USA)
(37)	911 617 103 01	electrical control unit oxygen sensor		1	(CAL)
38	999 507 248 02	speed nut M 5	80-	3	SC

Pos	Part Number	Name	Remarks	Qty	Model	Pos	Part Number	Name	Remarks	Qty	Model
39	N 010 264 4	hexagon-head bolt M 5 X 20	80-	3	SC						
40	900 025 003 02	washer 5,3	80-	3	SC						
41	N 012 222 4	spring washer B 5	80-	3	SC						
		- -- E N D -- -									

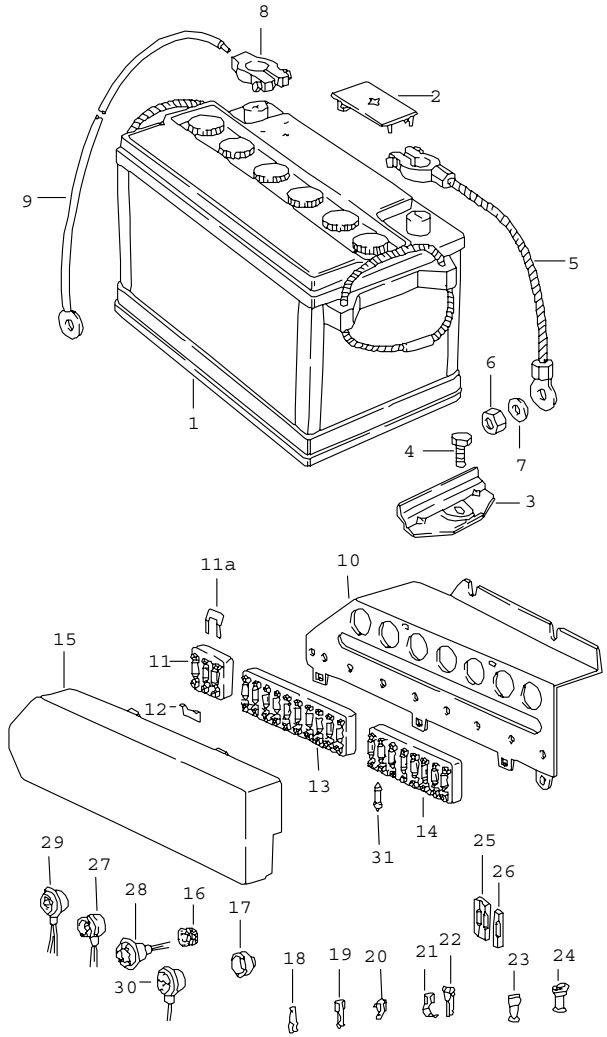

Pos	Part Number	Name	Remarks	Qty	Model
		battery fuse box			
1	928 611 101 01	battery 12 V 66 AH		1	
1	999 611 088 20	battery 12 V 88 AH		1	
2	999 611 104 00	pole covering		1	
3	911 611 209 00	bracket		1	
4	999 075 032 02	hexagon-head bolt M 8 X 20		1	
5	911 611 899 00	ground cable battery body		1	
6	900 076 030 02	hexagon nut M 8 X 1		1	
7	900 025 007 02	washer 8,4		1	
8	911 611 898 01	terminal		1	
9	911 612 022 28	battery-starter cable		1	
-	900 076 030 02	hexagon nut M 8 X 1		3	
-	900 025 007 02	washer 8,4		3	
10	911 612 197 00	plate fuse box relay		1	
-	911 612 401 00	spacer		1	
-	900 025 002 02	washer 4,3		2	
-	900 143 076 02	oval-head sheetmetal screw 4,2 X 25		1	
11	911 612 093 03	fuse box 3-pole		1	
-	900 146 009 02	oval-head screw 4 X 12		2	
11AA	901 612 835 01	connecting rail		1	
12	901 612 835 01	connecting rail		2	

Pos	Part Number	Name	Remarks	Qty	Model
13	911 612 086 01	fuse box 10-pole		1	
14	911 612 087 01	fuse box 8-pole		1	
-	900 146 009 02	oval-head screw 4 X 12		4	
-	999 507 401 40	special nut		2	
(15)	911 612 161 04	cover		1	SC
(15)	930 612 161 02	cover		1	TURBO
16	999 702 051 50	grommet		1	
17	911 611 921 00	rubber boot		1	
19	111 971 959	flat receptacle		X	
(19)	999 652 106 02	flat receptacle		X	
(19)	N 017 491 8	flat receptacle		X	
(19)	N 017 494 3	flat receptacle		X	
20	999 652 122 10	multiple plug connector		X	
23	999 652 119 40	connector housing for flat plug		X	
25	999 652 142 40	push-on connector 2-pole		X	
26	999 652 142 40	push-on connector single pole		X	
27	901 612 330 00	multiple plug connection 6-pole		X	
29	901 612 333 00	socket standard type relay		X	
30	901 612 334 00	socket flasher relay		X	
31	N 017 121 1	safety fuse 8 AMP.		X	
31	N 017 121 5	safety fuse 25 AMP.		X	
31	N 017 121 4	safety fuse 16 AMP.		X	
(31)	900 173 006 90	safety fuse 5 AMP.		X	

- -- E N D -- -

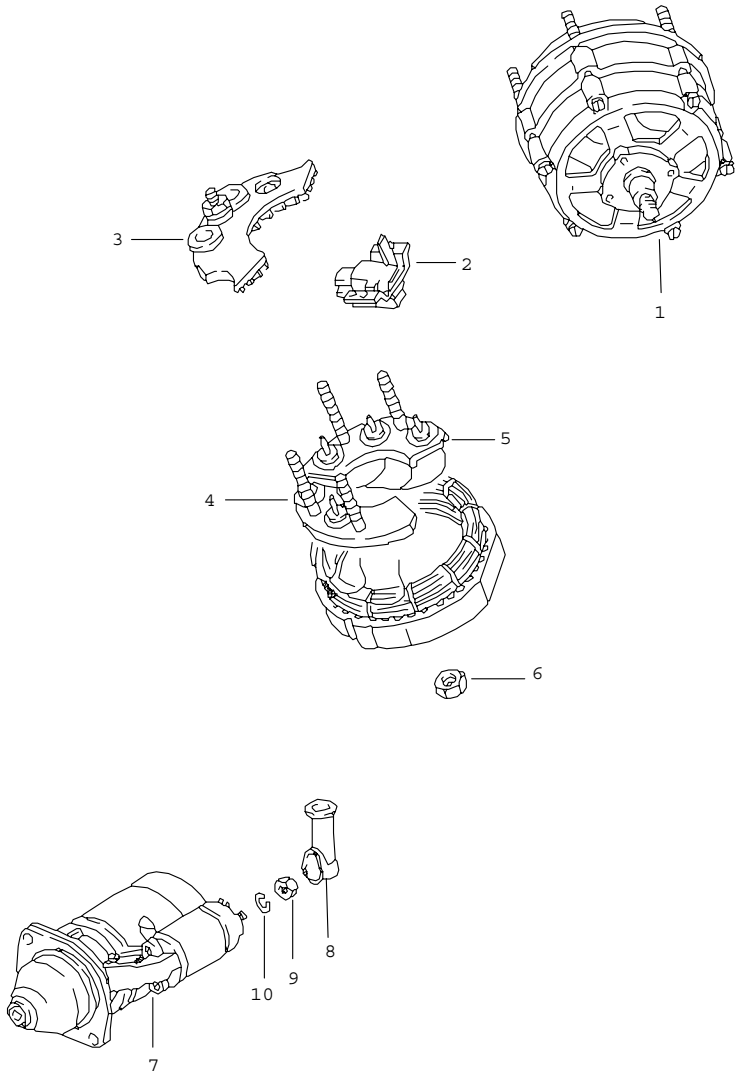

Pos	Part Number	Name	Remarks	Qty	Model
		generator starter			
		see technical information GR.2 , NR.28 , 11/81 see tpi GR.9 , NR.13 , 09/94			
1	> 911 603 120 02	generator	-81	1	
1	> 911 603 120 04	generator	82-	1	
-	900 910 009 02	lock nut VM 5	82	2	
-	N 011 005 14	hexagon nut M 5	83-	2	
-	900 076 010 02	hexagon nut M 6	82-	1	
-	911 641 981 00	resistor	82-	1	
-	111 971 511	line distributor	82-	2	
2	901 603 907 00	support	-81	1	
(3)	911 603 908 00	support diode group 980 W	-81	1	
-	928 603 910 00	diode plate for 911.603.120.04		1	
4	911 603 909 00	support diode group (-) 980 W	-81	1	
5	911 603 910 00	support diode group (+) 980 W	-81	1	
6	901 603 905 00	hexagon nut M 16 X 1	-81	1	
6	928 603 904 00	set of fastening parts M 17 X 1,5		1	
-	911 603 913 01	electronic regulator	82-	1	
-	911 612 233 00	ground strap generator crankcase		1	

Pos	Part Number	Name	Remarks	Qty	Model	Pos	Part Number	Name	Remarks	Qty	Model
7	> 916 604 101 00	starter 1,5 KW		1							
8	999 659 006 50	protection cap		1							
9	N 011 132 2	hexagon nut M 8		1							
10	900 027 015 02	lock ring B 8		1							
		- -- E N D -- -									

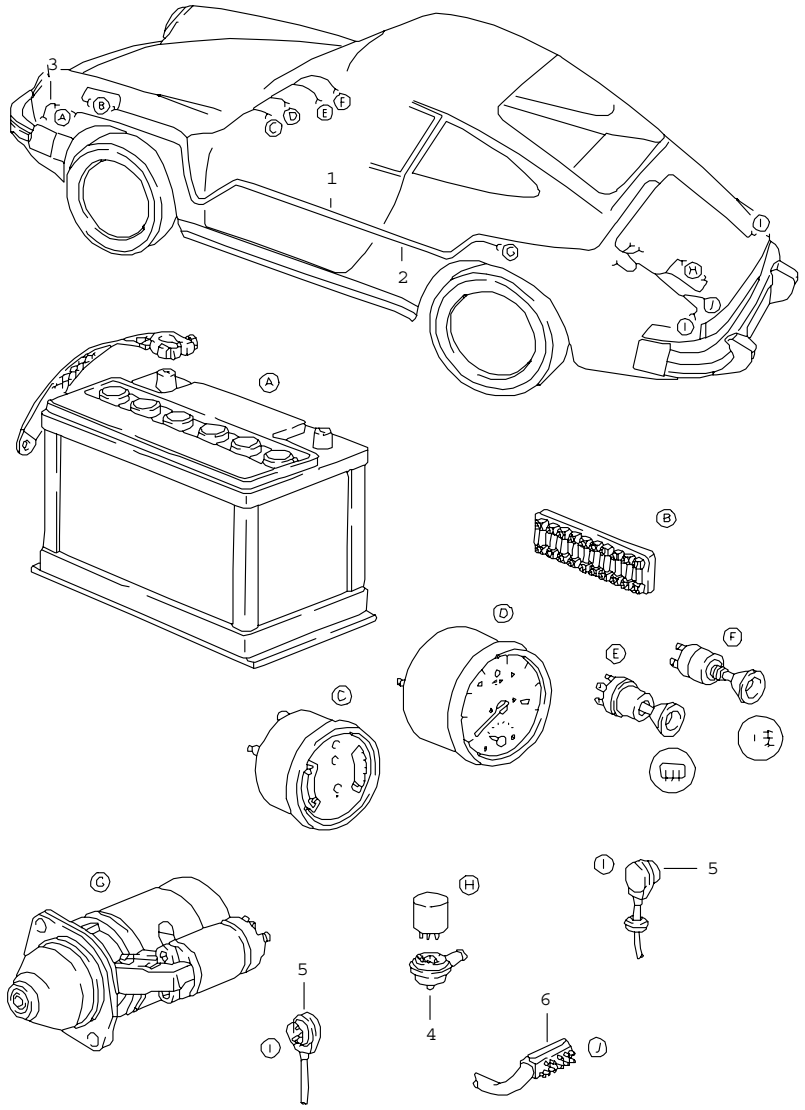

Pos	Part Number	Name	Remarks	Qty	Model
		harnesses			
1	911 612 001 30	wiring harness tunnel	/LL	1	SC
1	930 612 001 06	wiring harness tunnel	/LL	1	TURBO
(2)	911 612 022 28	battery-starter cable		1	
-	901 612 107 00	ground strap for bonnet		2	
		mounting parts			
-	999 513 002 40	tie-wrap		1	
-	999 702 132 50	rubber sleeve		1	
-	999 513 023 40	tie-wrap		5	
-	911 612 821 00	covering		1	
3	911 611 899 00	ground cable battery		1	
-	999 611 920 20	ground strap transmission		1	
4	901 612 333 00	socket standard type relay		1	
5	901 612 330 00	multiple plug connection rear light housing		2	
6	911 612 113 05	connector housing 14-pole		1	
		- -- E N D -- -			

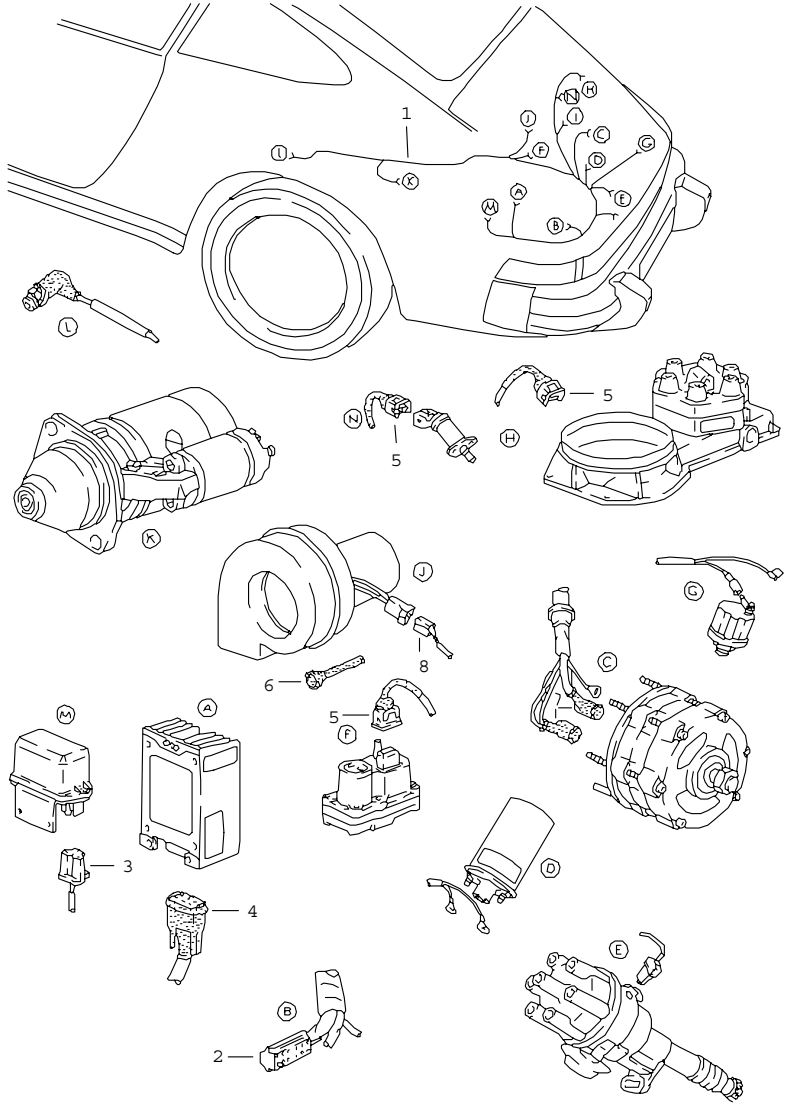

Pos	Part Number	Name	Remarks	Qty	Model
		harnesses engine			
1	911 612 016 03	wiring harness engine	-81	1	SC
(1)	911 612 016 04	wiring harness engine	82-	1	SC
(1)	911 612 012 02	wiring harness engine		1	SPM
(1)	930 612 016 05	wiring harness engine	-81	1	TURBO
(1)	930 612 016 06	wiring harness engine	82-	1	TURBO
-	911 612 907 00	contact pin for back-up light switch		2	
2	911 612 115 03	connector housing 14-pole		1	
5	022 906 231 A	connector housing		1	
6	022 906 102	protection cap		1	
7	999 659 033 50	rubber cap		2	
-	999 911 041 00	protective edging		1	
8	999 652 167 40	terminal sleeve housing		1	
-	914 613 491 00	rubber cap temperature switch		1	
-	911 612 233 00	ground strap generator crankcase		1	
-	999 511 118 02	clip for wiring harness POS. 1		1	
		o2 sensor closed-loop ctrl harnesses			
-	911 612 173 00	wiring harness control unit o2 sensor closed-loop ctrl		1	930.07/08/17
-	911 612 173 01	wiring harness control unit o2 sensor closed-loop ctrl		1	930.16

Pos	Part Number	Name	Remarks	Qty	Model	Pos	Part Number	Name	Remarks	Qty	Model
-	911 612 174 00	wiring harness engine o2 sensor closed-loop ctrl		1	930.07/08/17						
-	911 612 174 01	wiring harness engine o2 sensor closed-loop ctrl		1	930.16						
-	911 612 091 01	wiring harness luggage compartment		1							
-	171 971 998	connector housing luggage compartment		1							
		- -- E N D -- -									

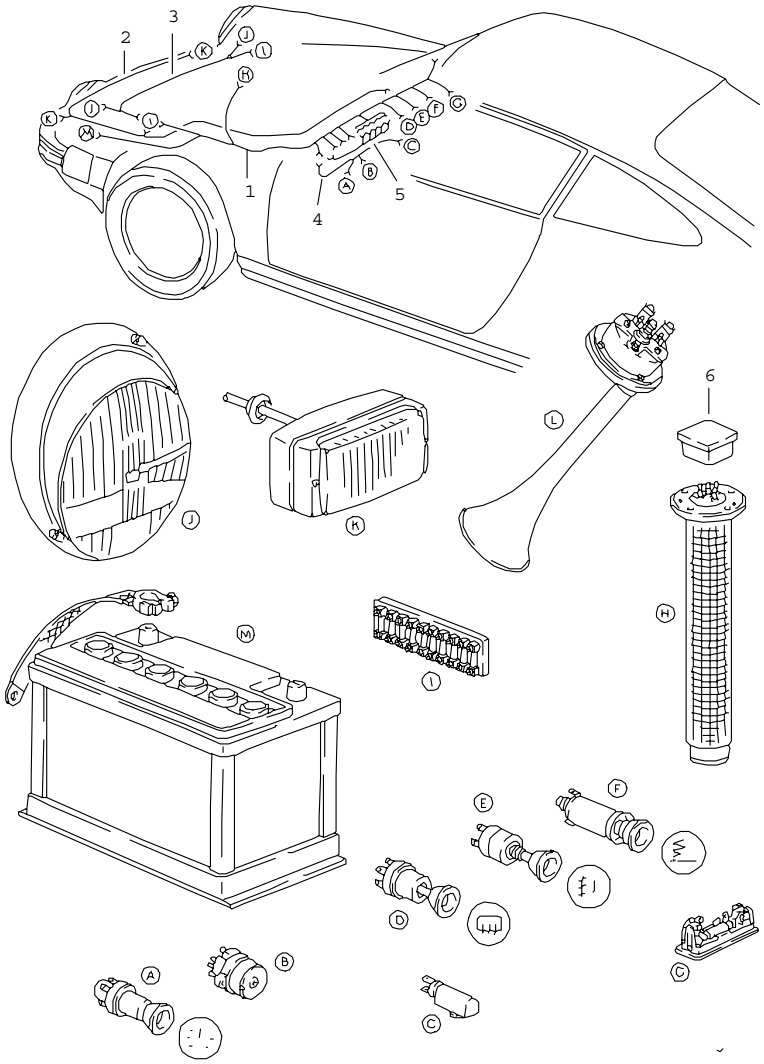

Pos	Part Number	Name	Remarks	Qty	Model
		harnesses luggage compartment steering lock			
1	911 612 002 14	wiring harness luggage compartment	/LL	1	
2	911 612 027 03	additional cables fog headlamp		1	
-	911 612 027 01	ground cable fog headlamp		1	
3	911 612 003 01	wiring harness fuse box headlamp horn		1	
4	911 612 011 32	wiring harness steering lock		1	
5	911 612 047 00	wiring harness instruments illumination		1	
-	477 953 331	grommet side turn signal		2	
-	911 612 010 03	wiring harness light switch		1	
-	930 612 091 00	single line indicator light generator diode		1	TURBO
-	111 971 977	plug with guide diode single line 930.612.091.00		1	TURBO
-	911 617 108 00	diode indicator light generator		1	TURBO
-	911 612 083 00	ground cable ashtray light		1	
-	901 612 303 20	ground strap connection piece fuel tank		1	
-	911 612 014 30	wiring harness hazard warning light sw.		1	
-	911 612 091 02	single line switch fog headlamp	81-	1	(CH)

Pos	Part Number	Name	Remarks	Qty	Model	Pos	Part Number	Name	Remarks	Qty	Model
-	901 612 064 00	ground cable switch fog headlamp		1							
6	901 612 891 01	connector housing		1							
		- -- E N D -- -									

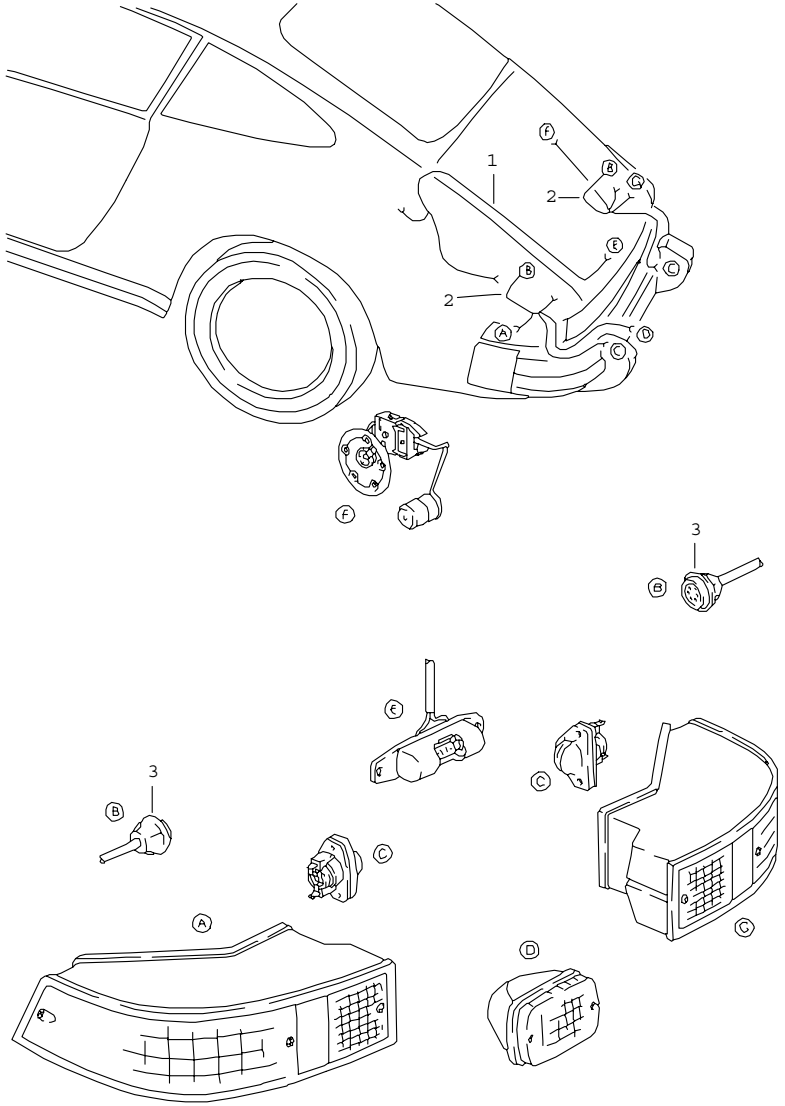

Pos	Part Number	Name	Remarks	Qty	Model
		harnesses rear end			
1	911 612 049 00	wiring harness engine compartment lamp		1	
2	911 612 039 01	wiring harness rear light	/R	1	(J)
(2)	911 612 039 10	wiring harness rear light	/L	1	(J)
(2)	911 612 039 03	wiring harness rear light	/R	1	(USA)(CDN)
2	911 612 039 11	wiring harness rear light	/L	1	(USA)(CDN)
-	901 612 066 02	wiring harness fog headlamp		1	
-	901 612 064 00	ground cable switch fog headlamp		1	
3	901 612 330 00	multiple plug connection		1	
		- -- E N D -- -			

Model	Year	MG	SG	Illustration	Restrictions	Update				
911	83	9	02	902-14		203	11:39	18.08.2006	PORSCHE	PET	PORSCHE

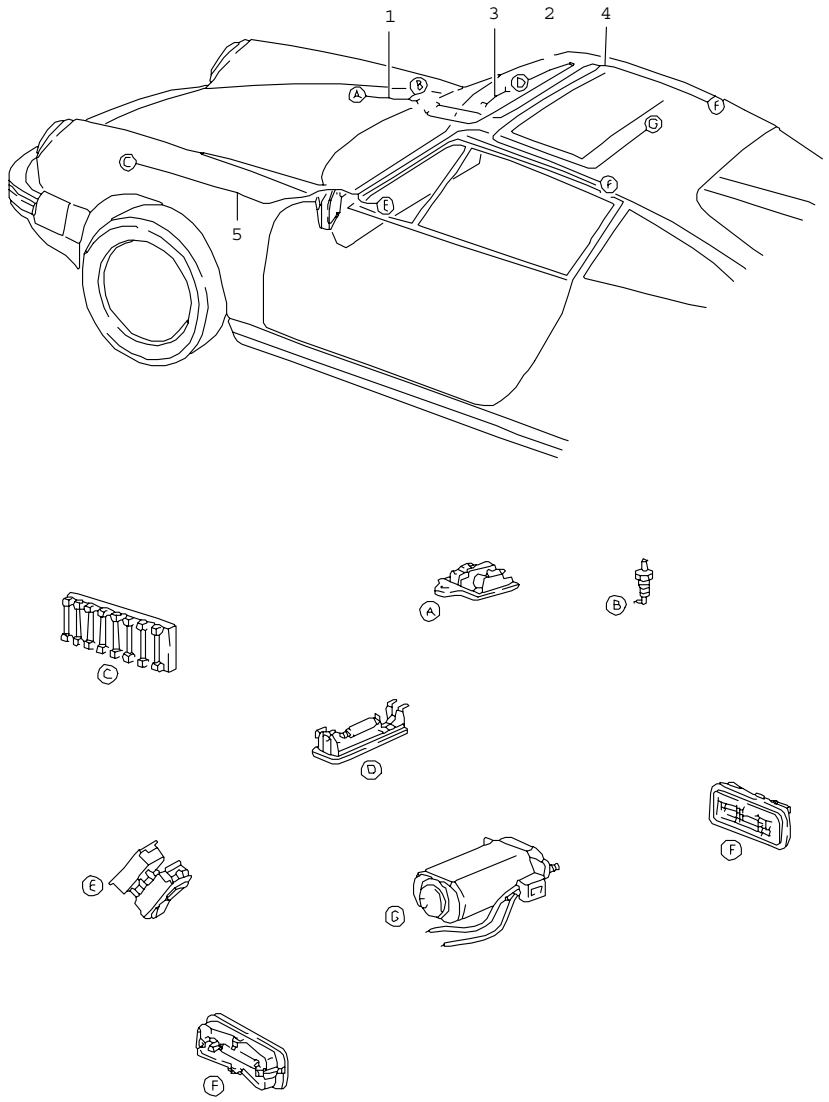

Pos	Part Number	Name	Remarks	Qty	Model
		harnesses front trunk interior lights sunroof			
1	911 612 044 21	wiring harness luggage boot lamp		1	
2	901 612 035 41	wiring harness interior light		1	TARGA
3	911 612 226 00	ground strap interior light		1	TARGA
4	901 612 035 20	wiring harness interior lights		1	COUPE
5	911 612 034 00	wiring harness sunroof	/LL	1	
-	999 613 017 40	covering cable holder		1	
-	911 612 415 00	wiring harness switch interior light	81-	1	
-	911 612 091 01	wiring harness	80-	1	
		- -- E N D -- -			

Model	Year	MG	SG	Illustration	Restrictions	Update				
911	83	9	02	902-15		203	11:40	18.08.2006	PORSCHE	PET	PORSCHE

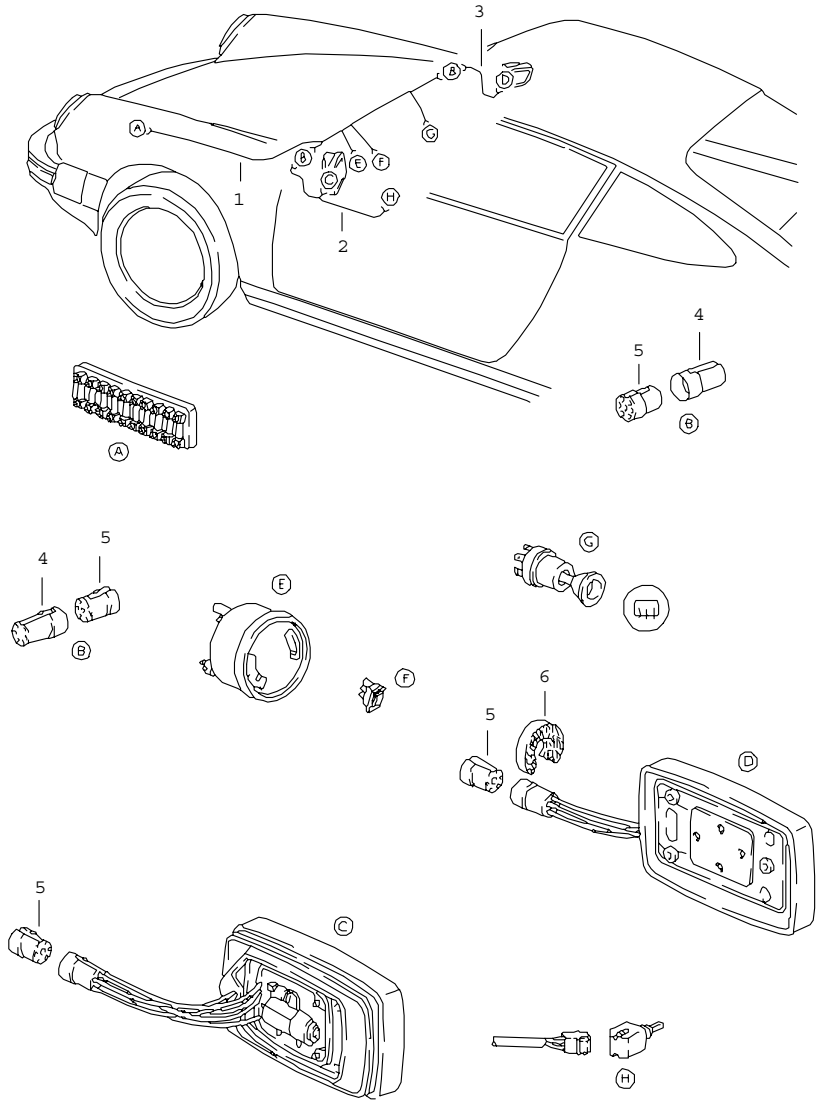

Pos	Part Number	Name	Remarks	Qty	Model
		harnesses door mirror			
		- 1 - door mirror			
1	911 612 162 03	wiring harness	/LL	1	
2	911 612 163 01	wiring harness		1	
(4)	911 612 890 00	plug socket 3-pole		1	
5	803 971 979	plug socket 7-pole		1	
		- 2 - door mirror			
1	911 612 164 03	wiring harness	/LL	1	
2	911 612 165 01	wiring harness driver's side		1	
3	911 612 166 01	wiring harness passenger's side		1	
4	803 971 980	connector 7-pole		2	
5	803 971 979	plug socket 7-pole		4	
6	911 731 317 00	seal		2	
		- -- E N D -- -			

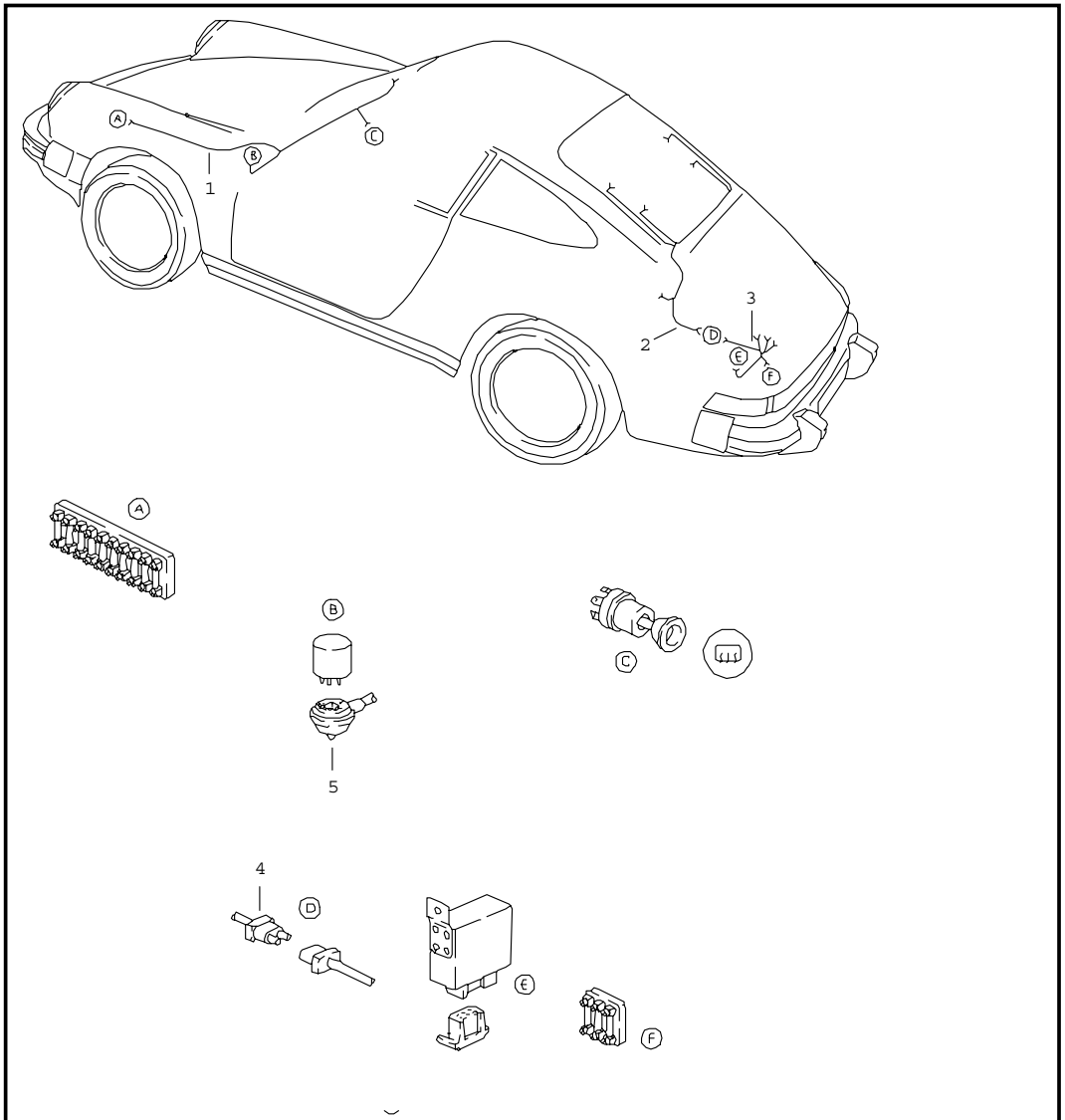

Pos	Part Number	Name	Remarks	Qty	Model
		harnesses windscreen heating rear window heating			
1	911 612 057 00	wiring harness windscreen heating	/LL	1	
2	911 612 032 01	wiring harness rear window heating two-stage heatable		1	
(2)	911 612 036 00	wiring harness rear window heating single-stage heating		1	
-	911 612 037 01	wiring harness rear window		2	COUPE
-	911 612 075 00	additional cable rear window		2	TARGA
3	911 612 035 00	wiring harness rear window relay two stages		1	
(3)	911 612 054 00	wiring harness with plate for standard type relay		1	
4	911 612 118 00	connector housing 2-pole for 911.612.032.01		1	
5	901 612 333 00	socket standard type relay		1	
-	901 612 066 02	wiring harness switch		1	
		- -- E N D -- -			

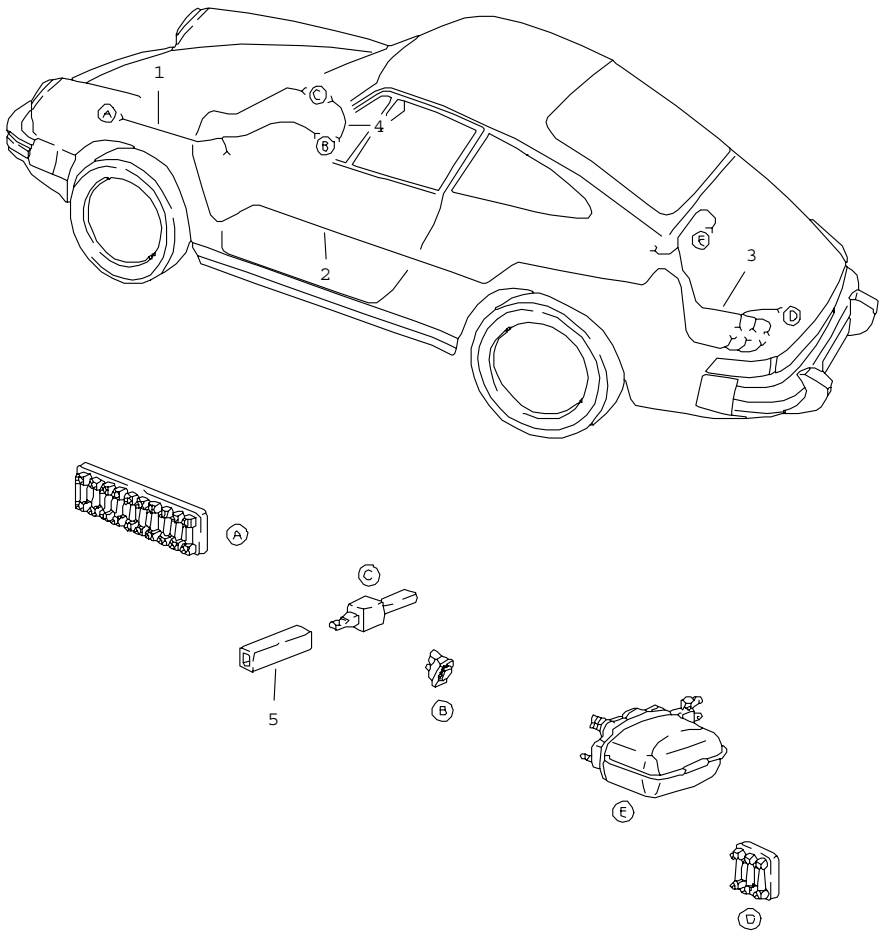

Pos	Part Number	Name	Remarks	Qty	Model
		harnesses rear window wiper			
1	911 612 019 00	wiring harness switch fuse box	/LL	1	
2	911 612 025 01	wiring harness tunnel	/LL	1	
3	911 612 031 02	wiring harness fuse box electric motor		1	SC
(3)	911 612 031 01	wiring harness fuse box electric motor		1	TURBO
4	911 612 223 00	single line switch diode		1	
5	111 971 977	plug with guide		1	
		- -- E N D -- -			

Model	Year	MG	SG	Illustration	Restrictions	Update			
911	83	9	02	902-18		203	11:40	18.08.2006	PORSCHE PET PORSCHE

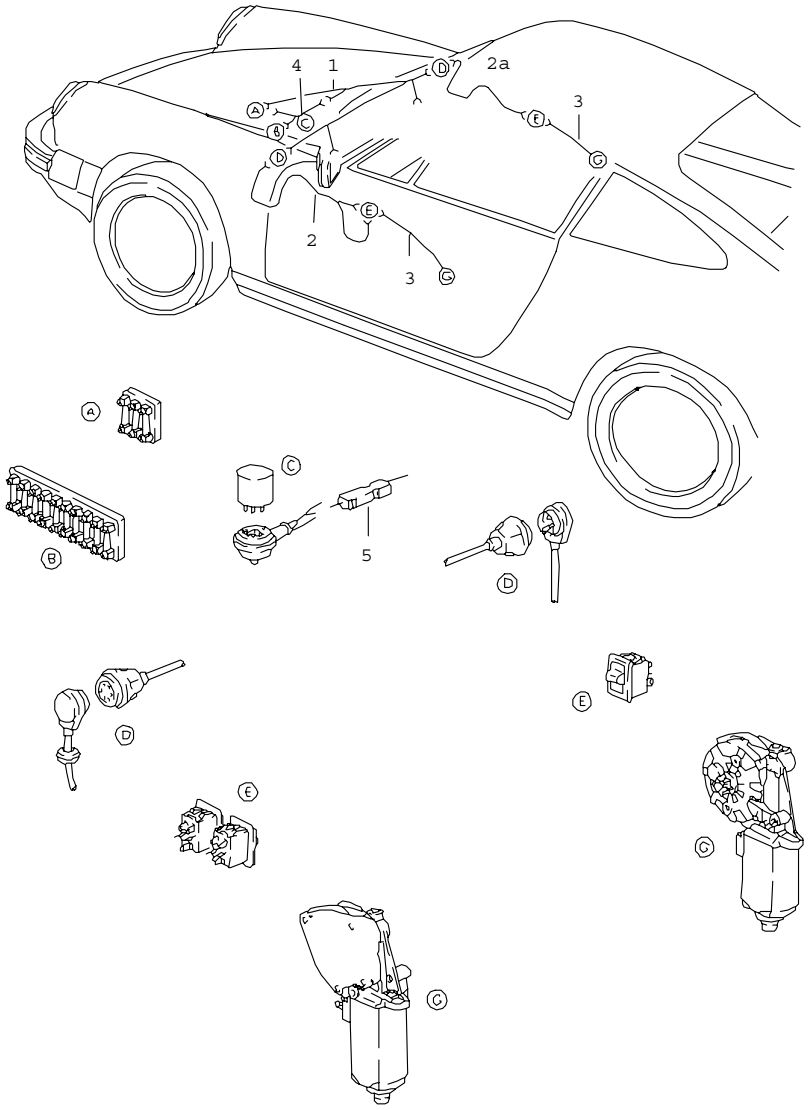

Pos	Part Number	Name	Remarks	Qty	Model
		harnesses power window			
1	911 612 167 00	wiring harness		1	
2	911 612 104 01	wiring harness switch	/L	1	
2A	911 612 104 02	wiring harness switch	/R	1	
3	911 612 048 00	wiring harness switch electric motor		2	
4	911 612 147 00	wiring harness relay		1	
5	111 971 977	plug with guide		1	
		- -- E N D -- -			

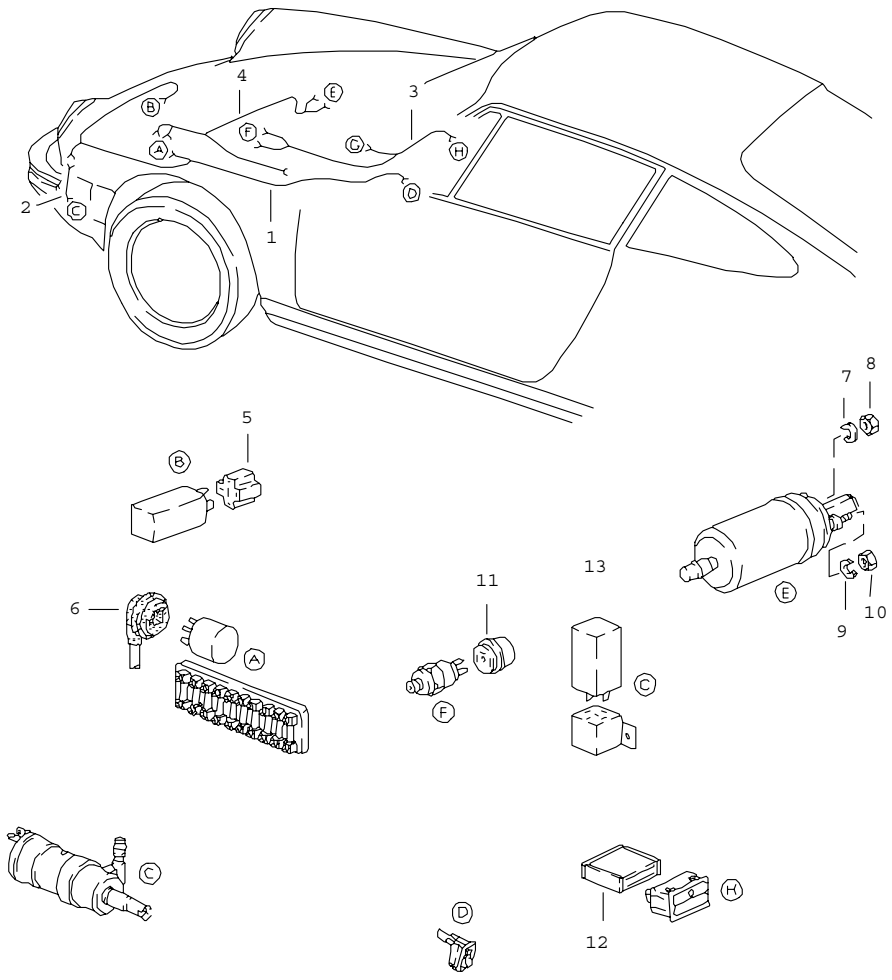

Pos	Part Number	Name	Remarks	Qty	Model
		harnesses headlight washer system warning light fuel pump			
1	911 612 076 00	wiring harness headlight washer system	-79	1	
(1)	911 612 076 01	wiring harness headlight washer system	80-	1	
2	911 612 179 01	wiring harness pump headlight washer system		1	
3	911 612 041 10	wiring harness warning light brake	/LL	1	
(3)	911 612 041 08	wiring harness warning light seat belt brake	-79	1	(USA)(CDN)
(3)	911 612 041 12	wiring harness warning light seat belt brake		1	SC (USA)(CDN)
-	N 013 970 5	tapping screw B 4,8 X 9,5		2	(USA)(CDN)
-	999 591 383 02	cable clamp		1	(USA)(CDN)
-	911 612 170 01	wiring harness warning light brake fluid		1	
4	911 612 072 01	wiring harness fuel pump		1	SC
(4)	930 612 072 02	wiring harness fuel pump		1	TURBO
(4)	930 612 072 03	wiring harness fuel pump rear		1	TURBO
5	803 971 835 A	terminal sleeve housing		1	
6	901 612 333 00	socket standard type relay		1	
7	900 027 011 01	lock ring B 4		1	
8	N 011 004 6	hexagon nut M 4		1	

Pos	Part Number	Name	Remarks	Qty	Model	Pos	Part Number	Name	Remarks	Qty	Model
9	N 012 005 3	lock ring B 5		1							
10	N 011 005 14	hexagon nut M 5		1							
11	113 945 525	terminal sleeve housing stop light switch		2							
12	113 971 998 B	connector housing warning light brake		1							
-	999 652 192 47	connector housing for harnesses POS.2 + POS.1		1							
-	815 971 989	connector housing for harnesses POS.1 + POS.2		1							
13	911 618 102 00	warning time relay seat belt		1							
		- -- E N D -- -									

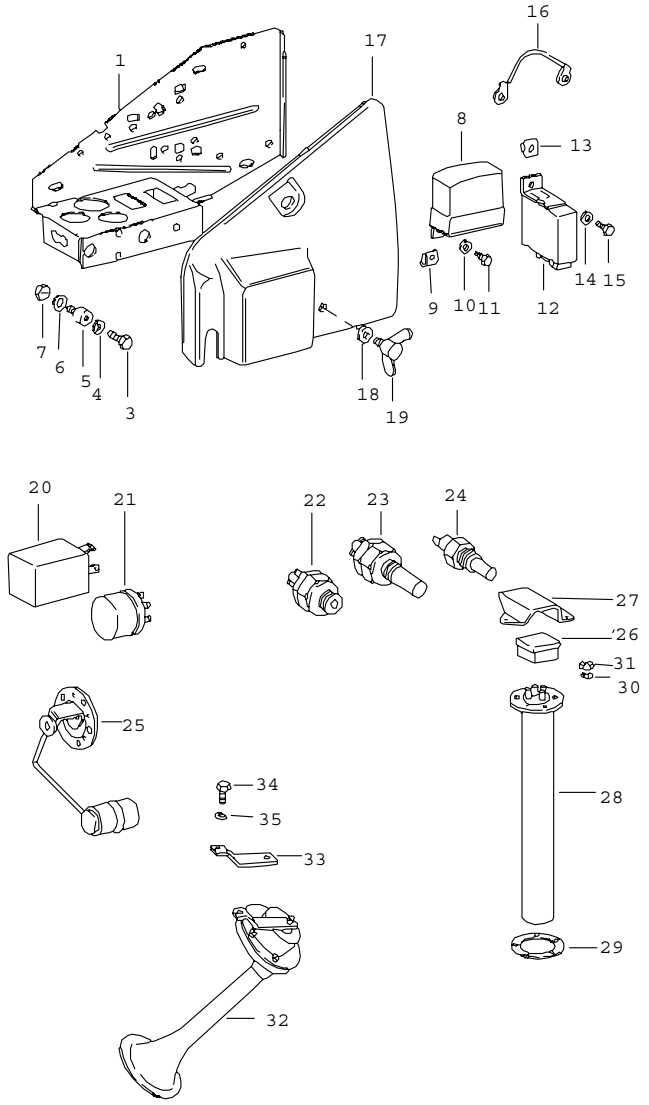

Pos	Part Number	Name	Remarks	Qty	Model
		plate relay sender fanfare			
1	911 610 103 03	plate		1	
-	999 507 321 02	captive nut		4	SC
3	N 010 208 5	hexagon-head bolt M 6 X 8		3	
4	N 012 226 5	spring washer B 6		3	
5	999 703 384 00	silentbloc		3	
6	900 031 011 02	washer B 6,4		3	
7	A 900 910 096 02	lock nut VM 6		3	
7	900 910 096 02	lock nut M 6		3	
8	911 603 206 13	regulator generator MOTOROLA,MARCHAL,SEV	-81	1	
-	911 619 001 00	suppression set for regulator	-81	1	
9	A N 015 429 2	speed nut B 4,2		2	
9	N 015 429 2	speed nut B 4,2		2	
10	900 151 001 02	washer A 4,3		2	
11	900 187 013 02	tapping screw BZ 4,2 X 13		2	
12	911 615 115 00	relay rear window heating two stages		1	
13	N 015 429 2	speed nut B 4,2		1	
14	900 151 001 02	washer A 4,3		1	
15	900 187 013 02	tapping screw BZ 4,2 X 13		1	

Pos	Part Number	Name	Remarks	Qty	Model
16	911 612 008 00	ground strap plate		1	
(17)	930 610 105 03	cover plate		1	
18	900 151 003 02	washer A 6,4		2	
19	900 029 102 02	winged screw M 6 X 12		2	
20	914 618 303 11	flasher relay		1	
(20)	911 618 103 00	flasher relay only together with trailer coupling		1	
21	911 615 109 01	standard type relay black		X	
21	911 615 108 01	standard type relay red		1	
-	A 930 617 117 01	relay slow-action relay ignition cut-off		1	TURBO
-	930 617 117 01	relay slow-action relay ignition cut-off		1	TURBO
-	821 951 253	relay oxygen sensor	80-	1	SC
22	914 613 541 02	back-up light switch		1	
-	999 652 315 02	flat plug ground cable		1	
26	901 612 891 01	connector housing sender		1	
27	901 201 275 30	cap		1	
28	901 741 801 00	sender fuel-level indicator fuel tank 62 - 85 L see group 2/01/00		1	
29	A 477 919 133	sealing ring		1	
29	477 919 133	sealing ring		1	
30	N 012 222 4	spring washer A 5		5	
31	N 011 005 14	hexagon nut M 5		5	
32	911 635 101 20	fanfare short high-pitched		1	
(32)	911 635 102 20	fanfare long low-pitched		1	
33	911 635 091 00	support high-pitched		1	
(33)	911 635 097 01	support low-pitched		1	
34	900 075 087 02	hexagon-head bolt M 8 X 16		2	
35	900 027 015 02	lock ring B 8		2	
-	911 612 093 03	fuse box 3-pole for plate		1	
-	900 014 074 02	pan-head screw AM 4 X 12		2	
-	N 012 224 3	spring washer B 4		2	
-	N 011 004 6	hexagon nut M 4		2	
-	999 702 119 50	rubber sleeve		2	
-	911 617 131 01	control unit enrichment		1	SC

- -- E N D -- -

Model	Year	MG	SG	Illustration	Restrictions	Update	11:41	18.08.2006	PORSCHE PET PORSCHE
911	83	9	03	903-05		203			

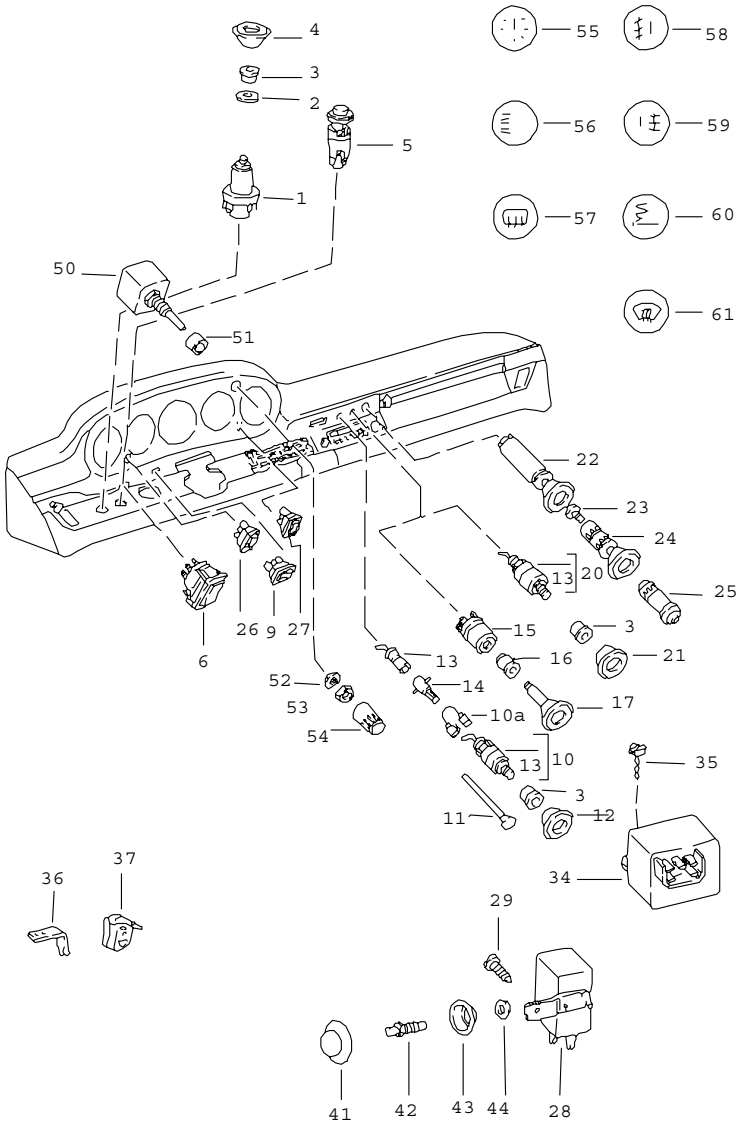

Pos	Part Number	Name	Remarks	Qty	Model
		switch relay			
1	911 613 029 03	switch		1	
2	900 151 026 02	washer		1	
3	911 613 213 02	rose	-80	2	
(3)	911 613 213 03	rose	81-	2	
4	911 613 215 00	knob		1	(J)
(4)	911 613 215 01	knob		1	(USA) (CDN)
5	911 613 124 32	hazard warning light sw.		1	
-	900 631 102 90	bulb 2 W		1	
-	911 612 249 00	resistor 150 OHM - 2 - W		1	
6	911 613 622 00	tip switch for sliding roof		1	
-	911 613 621 03	switch for window opener		3	
-	911 613 635 20	wiper frame for window opener		3	
9	911 613 113 00	changeover switch door mirror		1	
(10)	911 613 149 00	switch rear window heating single-stage heating	81-	1	
(10)	911 613 145 00	switch rear window heating two-stage heatable	-80	1	
(10)	911 613 147 00	switch rear window heating two-stage heatable	81-	1	
11	911 613 228 00	luminous stick	-80	1	
-	999 703 067 50	grommet		1	
12	911 613 215 03	knob	-80	1	
(12)	911 613 028 03	knob	81-	1	
13	999 632 007 00	bulb holder		1	

Pos	Part Number	Name	Remarks	Qty	Model
14	900 631 102 90	bulb 12 V 2 W	-80	1	
(14)	900 631 132 90	bulb	81-	1	
15	914 613 451 10	switch fog headlamp rear fog light	-80	1	
(15)	911 613 147 00	switch fog headlamp rear fog light	81-	1	
16	911 613 213 03	rose		1	
17	911 613 028 03	knob		1	
20	902 613 623 90	switch fog headlamp or rear fog light	-80	1	
(20)	911 613 149 00	switch fog headlamp rear fog light	81-	1	
-	911 612 251 00	resistor for switch fog headlamp rear fog light	-80	1	
21	911 613 215 02	knob	-80	1	
(21)	911 613 028 03	knob	81-	1	
22	911 652 102 06	cigarette lighter		1	
23	644 652 112 00	glower cigarette lighter		1	
24	911 652 122 02	connector cigarette lighter		1	
25	901 613 801 00	connector		1	
26	911 613 321 01	tip switch rear window wiper		1	
27	911 613 319 01	tip switch headlight washer system		1	
28	928 618 111 00	relay headlight washer system		1	
29	N 013 968 7	tapping screw B 4,8 X 13		1	
-	911 617 136 00	relay for cars with catalytic converter		1	SC
34	911 618 149 01	pulse sender wipe interval		1	
35	N 013 970 5	tapping screw B 4,8 X 9,5		1	
36	901 613 523 20	contact bow hand brake switch		1	
37	901 613 521 20	contact piece		1	
41	901 615 616 20	rubber cap		2	
42	964 613 601 00	door contact switch luggage boot lamp		3	
(42)	928 613 147 00	door contact switch interior light	80-	2	
(42)	901 615 601 02	door contact switch glove compartment light		1	
43	901 615 615 20	concave washer		2	
44	900 031 001 60	washer A 8,4		2	
50	911 618 147 01	potentiometer wipe interval		1	
51	911 618 207 00	spacer sleeve		1	
52	900 028 019 01	spring washer B 7		1	
53	911 618 209 00	hexagon nut M 7 X 0,75		1	
54	911 618 011 00	knob		1	
		cap with symbol			
56	911 613 239 01	cap with symbol light switch		1	
57	911 613 232 02	cap with symbol		1	
	01C	satin black rear window heating			
58	911 613 233 01	cap with symbol fog headlamp		1	

Pos	Part Number	Name	Remarks	Qty	Model	Pos	Part Number	Name	Remarks	Qty	Model
59	911 613 234 01	cap with symbol rear fog light		1							
60	911 613 235 01	cap with symbol cigarette lighter		1							
61	911 613 240 01	cap with symbol windscreen heating		1							
		- -- E N D -- -									

Model	Year	MG	SG	Illustration	Restrictions	Update			
911	83	9	03	903-10		203	11:41	18.08.2006	PORSCHE PET PORSCHE

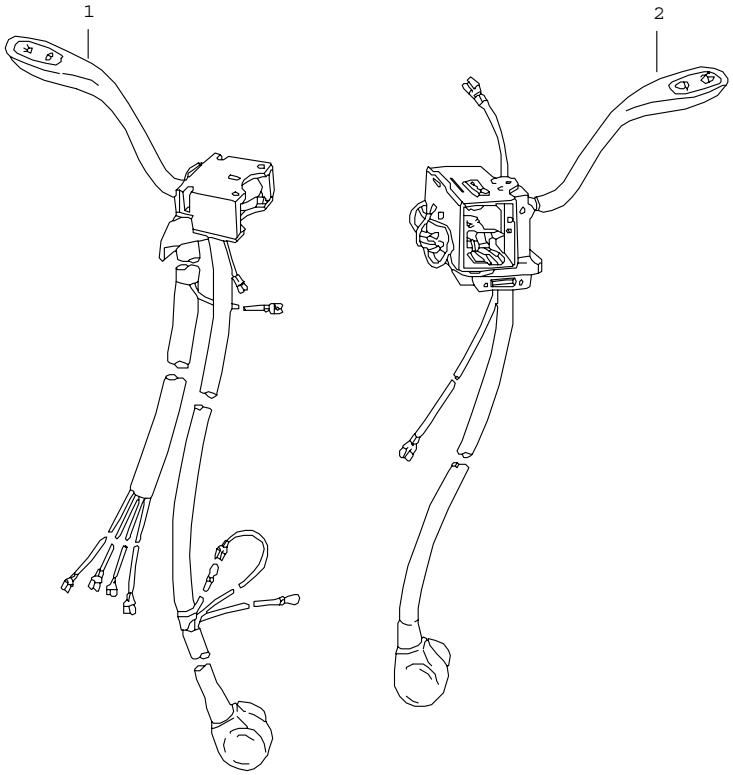

Pos	Part Number	Name	Remarks	Qty	Model
		steering column switch			
1	911 613 305 01	steering column switch direction indicator light low/high beam		1	
2	911 613 306 02	steering column switch windscreen wiper system		1	
		- -- E N D -- -			

Model	Year	MG	SG	Illustration	Restrictions	Update	11:41	18.08.2006	PORSCHE PET PORSCHE
911	83	9	04	904-00		203			

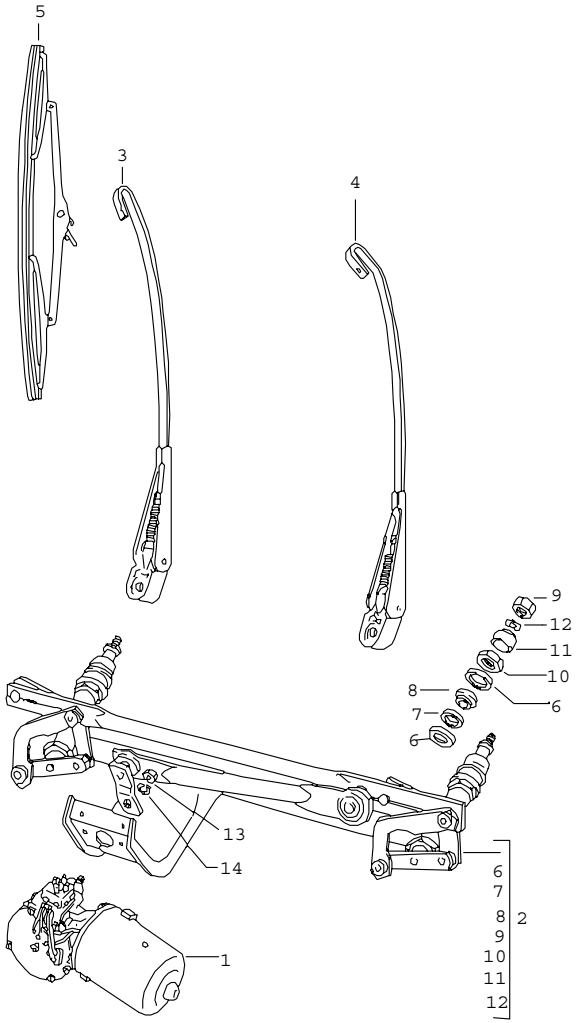

Pos	Part Number	Name	Remarks	Qty	Model
		windscreen wiper system			
1	A 911 628 115 01	wiper motor	/LL	1	
2	A 911 628 961 00	crank drive	/LL	1	
3	911 628 313 00	wiper arm	/LL/L /RL/R	1	
4	911 628 314 00	wiper arm	/LL/R	1	
5	964 628 901 00	wiper blade		2	
6	911 628 963 00	washer		4	
7	901 628 923 01	rubber bush		2	
8	901 628 924 00	rubber bush		2	
9	N 011 118 11	hexagon nut BM 8		2	
10	901 628 925 00	hexagon nut		2	
11	901 628 926 00	cap		2	
12	901 628 927 00	spring washer		2	
13	900 076 010 02	hexagon nut M 6		1	
14	N 042 121 1	shake-proof washer 6,4		1	
		- -- E N D -- -			

Model	Year	MG	SG	Illustration	Restrictions	Update	11:42	18.08.2006	PORSCHE PET PORSCHE
911	83	9	04	904-05		203			

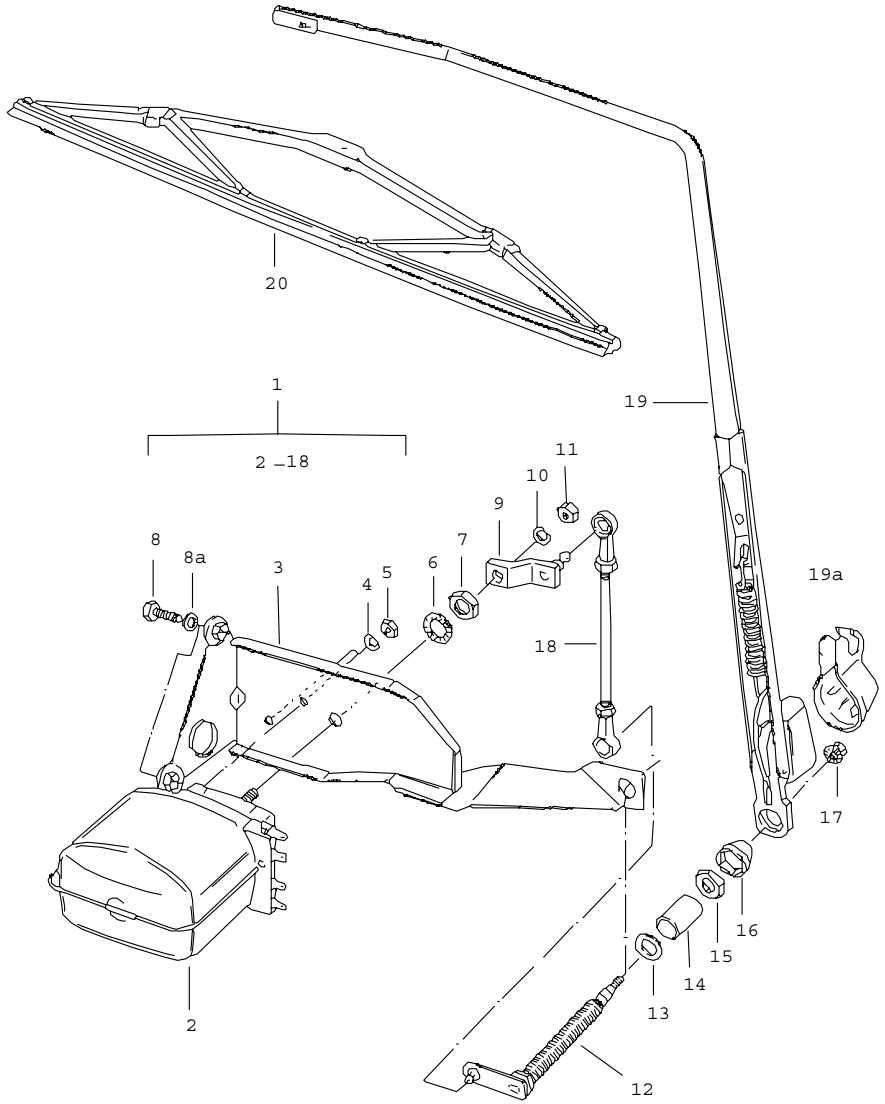

Pos	Part Number	Name	Remarks	Qty	Model
		rear window wiper for subsequent installat. 911SC /M 559 use also: condenser 911.573.057.04		1	
1	911 628 019 03	rear window wiper without wiper arm wiper blade		1	SC
(1)	911 628 019 04	rear window wiper without wiper arm wiper blade	-80	1	SC,M 473
(1)	911 628 019 05	rear window wiper without wiper arm wiper blade	81-	1	SC,M 473 TURBO
2	911 628 063 00	wiper motor		1	
3	911 628 037 01	wiper frame		1	
4	N 012 006 4	lock ring		2	
5	999 076 023 02	hexagon nut M 5		2	
6	911 628 338 00	washer 14,2		1	
7	999 078 014 02	hexagon nut M 14 X 1		1	
8	999 072 005 09	hexagon-head bolt M 6 X 12		2	
8A	N 012 006 4	lock ring B 6		1	
9	901 628 318 00	lever		1	
10	N 012 006 4	lock ring A 6		1	
11	999 076 024 02	hexagon nut M 6		1	
12	911 628 256 02	wiper bearing		1	SC
(12)	911 628 256 01	wiper bearing		1	SC,M 473 TURBO

Pos	Part Number	Name	Remarks	Qty	Model
13	999 040 002 00	round seal B 10		1	
14	911 628 251 03	bush		1	SC
(14)	911 628 251 01	bush		1	SC,M 425/473
(14)	911 628 251 04	bush		1	SC,M 473
(14)	911 628 251 02	bush		1	TURBO
15	999 183 004 02	hexagon nut M 12 X 1		1	
16	911 628 193 00	cap		1	
17	999 084 045 02	lock nut M 6		1	
18	911 628 145 00	joint rod		1	
19	911 628 611 01	wiper arm		1	
19A	911 628 623 00	cap	82-	1	
20	911 628 613 01	wiper blade		1	
-	911 613 321 01	tip switch		1	
-	911 612 031 02	wiring harness wiper motor		1	SC
-	911 612 031 01	wiring harness wiper motor		1	TURBO
-	911 612 025 01	wiring harness wiper switch	/LL	1	
-	911 612 223 00	single line wiper switch		1	
-	911 612 019 00	wiring harness wiper switch	/LL	1	
-	911 617 106 01	diode		1	
		- -- E N D -- -			

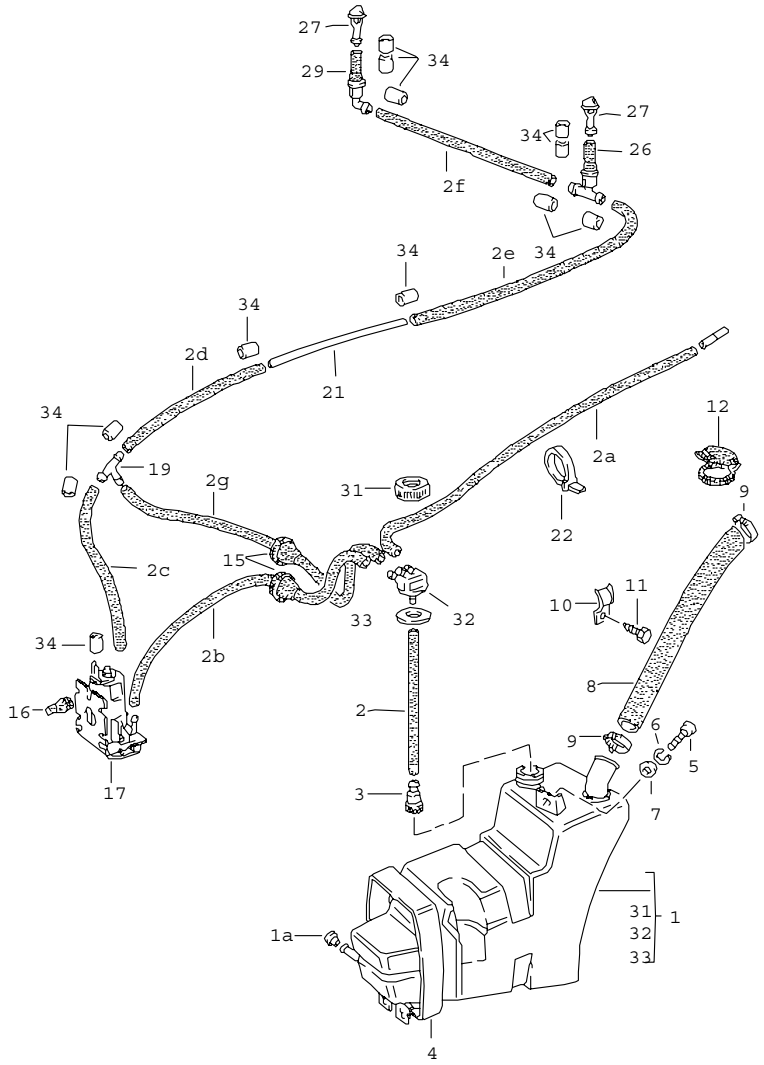

Pos	Part Number	Name	Remarks	Qty	Model
		windscreen washer system			
1	911 628 075 08	water reservoir		1	
1	911 628 075 08	water reservoir	-79	1	M 288
1	911 628 075 07	water reservoir	80-	1	M 288
1A	999 703 013 50	plug		1	
-	N 020 301 1	hose PVC 4 X 6		X	
2	-	300 MM		1	
2A	-	800 MM		1	
2B	-	650 MM		1	
2C	-	150 MM		1	
2D	-	360 MM		1	
2E	-	360 MM		1	
2F	-	900 MM		1	
2G	-	500 MM		1	
3	911 628 749 00	t-piece water reservoir		1	
4	911 628 081 00	restraining strap		1	
5	N 010 217 9	hexagon-head bolt M 6 X 20		1	
6	N 012 007 2	lock ring A 6		1	
7	900 151 003 02	washer A 6,4		1	
8	911 628 236 00	filling hose 25 X 32 X 710		1	
9	999 512 356 02	hose clamp		2	
10	911 573 145 00	clamp		1	
11	900 187 025 02	hexagon-head tapping screw B 5,5 X 13		1	
12	964 201 507 00	cover filler neck		1	
15	911 612 132 00	rubber sleeve		1	

Pos	Part Number	Name	Remarks	Qty	Model
16	914 628 741 00	plug		3	
17	928 628 074 01	pump electric		1	
19	901 628 749 20	t-piece		1	
21	911 628 237 00	pipe 4 X 5 X 1100 MM		1	
22	999 513 023 40	tie-wrap		2	
26	914 628 433 00	valve		1	
27	914 628 203 11	nozzle		2	
29	911 628 999 00	valve	-80	1	
29	477 955 481	valve	81-	1	
31	911 628 735 00	threaded cover		1	
32	911 628 737 00	centre piece		1	
33	911 628 743 00	closing gasket		1	
34	111 971 521 A	hose protecting sleeve		8	
		- -- E N D -- -			

Pos	Part Number	Name	Remarks	Qty	Model

Model	Year	MG	SG	Illustration	Restrictions	Update	11:42	18.08.2006	PORSCHE PET PORSCHE
911	83	9	04	904-15		203			

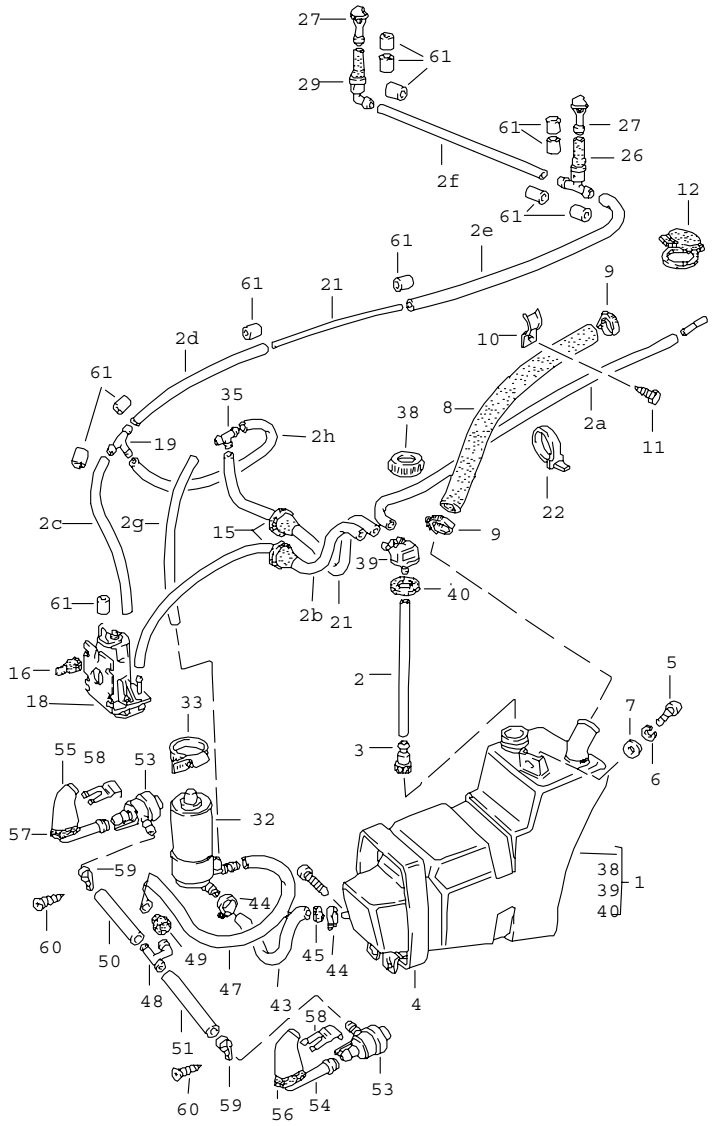

Pos	Part Number	Name	Remarks	Qty	Model
		windscreen washer system headlight washer system	-79		
1	911 628 075 08	water reservoir		1	
-	N 020 301 1	hose PVC 4 X 6		X	
2	-	300 MM		1	
2A	-	800 MM		1	
2B	-	650 MM		1	
2C	-	150 MM		1	
2D	-	360 MM		1	
2E	-	360 MM		1	
2F	-	900 MM		1	
2G	-	510 MM		1	
(2G)	-	320 MM for cars with air conditioner		1	
2H	-	100 MM		1	
2I	-	530 MM		1	
3	911 628 749 00	t-piece water reservoir		1	
4	911 628 081 00	restraining strap		1	
5	N 010 217 9	hexagon-head bolt M 6 X 20		1	
6	N 012 007 2	lock ring A 6		1	
7	900 151 003 02	washer A 6,4		1	
8	911 628 236 00	filling hose 25 X 32 X 710		1	
9	999 512 356 02	hose clamp		2	
10	911 573 145 00	clamp		1	
11	900 187 025 02	hexagon-head tapping screw B 5,5 X 13		1	
12	964 201 507 00	cover filler neck		1	

Pos	Part Number	Name	Remarks	Qty	Model
15	911 612 132 00	rubber sleeve		2	
16	914 628 741 00	plug		3	
17	928 628 074 01	pump electric		1	
19	901 628 749 20	t-piece		1	
21	911 628 237 00	pipe 4 X 5 X 1100		1	
22	999 513 023 40	tie-wrap		2	
26	914 628 433 00	valve		1	
27	914 628 203 11	nozzle		2	
(27)	944 628 911 00	nozzle heatable		2	
29	911 628 999 00	valve		1	
(32)	477 955 679 A	pump		1	
33	999 512 164 02	hose clamp		1	
35	911 628 748 00	valve		1	
38	911 628 735 00	threaded cover		1	
39	911 628 737 00	centre piece		1	
40	911 628 743 00	closing gasket		1	
-	999 181 182 40	hose PVC 10 X 14		*	
43	-	330 MM		1	
(43)	-	140 MM for cars with air conditioner		1	
44	999 512 134 02	hose clamp		2	
45	021 119 569 A	rubber sleeve		1	
47	900 918 031 40	pressure hose 10 X 12,5		1	
(47)	900 918 031 40	pressure hose		1	
(47)	900 918 031 40	pressure hose PA 11 for cars with air conditioner		1	
48	914 628 413 10	distributing piece		1	
-	999 512 554 00	hose clamp		2	
49	411 941 189	grommet		1	
-	900 918 031 40	pressure hose 10 X 12,5		X	
		780 MM		1	
		480 MM		1	
53	113 955 187	nozzle		2	
54	911 628 085 00	nozzle		1	
55	911 628 086 00	nozzle		1	
56	911 628 807 00	desk pad jet carrier		1	
57	911 628 808 00	desk pad jet carrier		1	
58	113 955 199	leaf spring		2	
59	999 511 052 02	clamp		2	
60	N 013 968 7	tapping screw B 4,8 X 13		2	
61	111 971 521 A	hose protecting sleeve		12	
		- -- E N D -- -			

Model	Year	MG	SG	Illustration	Restrictions	Update	11:42	18.08.2006	PORSCHE PET PORSCHE
911	83	9	04	904-20		203			

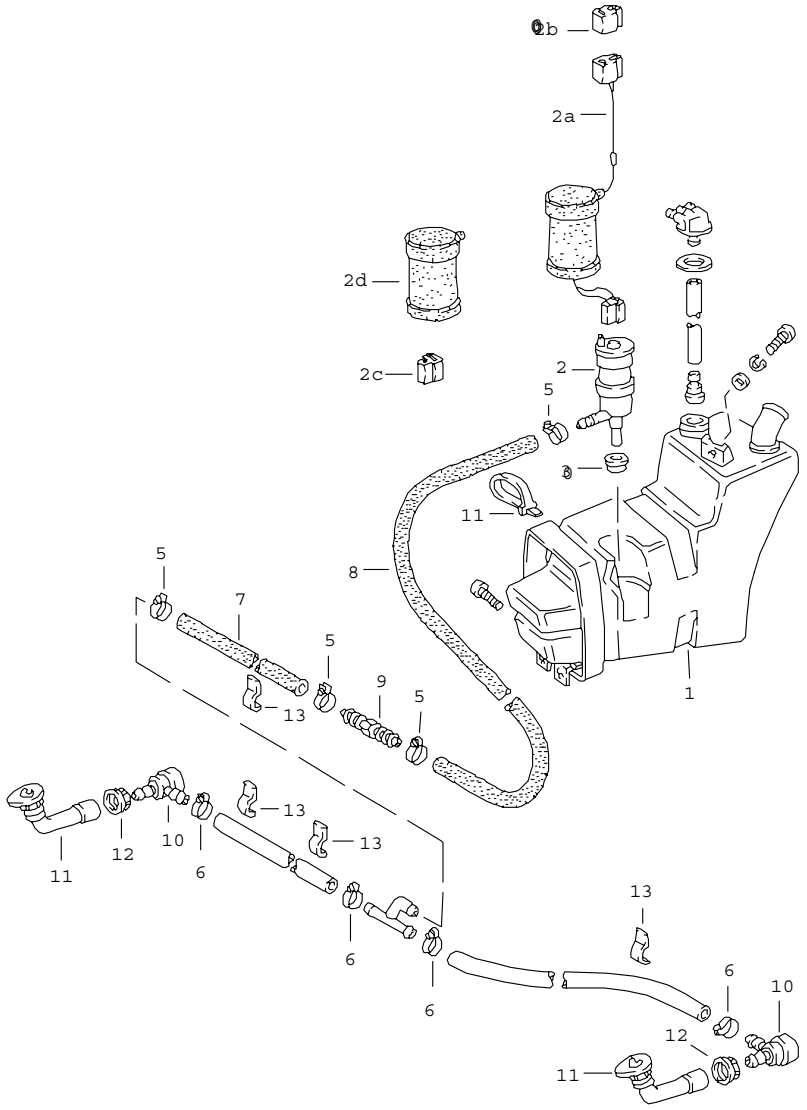

Pos	Part Number	Name	Remarks	Qty	Model
		windscreen washer system headlight washer system	80-		
		see group 9/04/15			
1	911 628 075 07	water reservoir		1	
2	191 955 681	pump		1	
2A	911 612 179 01	wiring harness		1	
2B	999 652 192 47	connector housing		1	
2C	999 652 167 40	terminal sleeve housing		1	
2D	477 971 921	protection cap		1	
3	928 628 193 00	gasket		1	
5	N 023 570 2	hose clamp		4	
6	999 512 160 02	hose clamp		4	
-	999 181 806 40	hose PVC 10 X 16		X	
7	-	420 MM		1	
8	-	230 MM		1	
9	999 137 023 40	connecting socket		1	
10	477 955 183	pressure control valve		2	
11	911 628 085 01	jet carrier		2	
12	900 281 002 40	hexagon nut APG 11		2	
13	999 613 017 40	covering cable holder		X	
14	999 513 008 40	tie-wrap		1	
		- -- E N D -- -			

Model	Year	MG	SG	Illustration	Restrictions	Update	11:43	18.08.2006	PORSCHE	PET	PORSCHE
911	83	9	05	905-00		203					

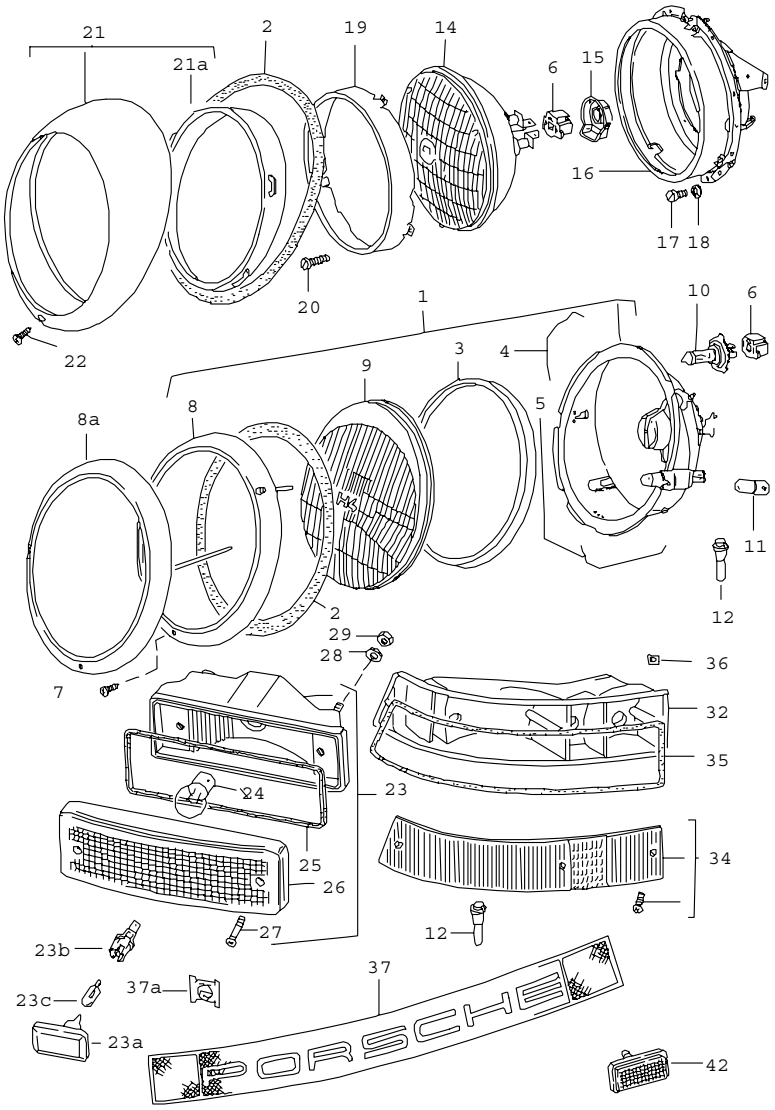

Pos	Part Number	Name	Remarks	Qty	Model
		headlamp lights			
2	911 631 115 02	gasket		2	
6	911 631 108 00	terminal sleeve housing		2	
(14)	999 631 127 90	headlamp unit "SEALED BEAM" - HALOGEN - 60/40 W		2	(USA)(CDN)
(14)	911 631 114 00	headlamp		2	(J)
-	900 631 109 90	bulb 12 V - 45/40 W for 911.631.114.00		2	(J)
15	911 631 116 00	cap for 911.631.114.00		2	(J)
16	901 631 103 02	mounting piece		2	
17	999 014 008 02	cheese-head screw		8	
18	900 114 014 01	shake-proof washer A 4,3		8	
19	901 631 102 03	glass plate		2	
20	N 014 122 8	oval-head screw AM 4 X 8		6	
(21)	901 631 102 05	retaining ring for "SEALED BEAM" chrome order also: 911.631.137.00		2	
(21)	911 631 135 01	retaining ring for "SEALED BEAM" prime coated order also: 911.631.137.00		2	
-	911 631 137 00	plug for retaining ring		4	
(21A)	911 631 133 01	intermediate ring plastic material		2	
22	A 911 631 146 01	lens-head screw AM 5 X 18		2	

Pos	Part Number	Name	Remarks	Qty	Model
22	911 631 146 01	lens-head screw for retaining ring 911.631.135.00		2	
-	911 631 148 00	bush for retaining ring 911.631.135.00		2	
-	113 951 539	washer		2	
(23)	911 631 409 00	direction indicator light		2	(USA) (CDN)
(23)	911 631 411 00	side marker light		2	(USA) (CDN)
(23)	911 631 417 00	direction indicator light	-80	2	(DK)(N)(I) (J)
(23)	911 631 413 00	side direction indicator	-80	2	(DK)(N)(I) (J)
23A	4A0 949 101	side turn signal not for (USA)(CDN)	80-	2	
23B	161 949 111	bulb holder not for (USA)(CDN)	80-	2	
23C	999 631 032 90	bulb	80-	2	
24	-	bulb see group 9/05/05			
25	911 631 961 00	rubber seal direction indicator light		2	
26	911 631 914 00	lens yellow direction indicator light		2	
(26)	911 631 916 00	lens direction indicator light		2	(USA) (CDN)
(26)	911 631 920 00	lens side marker light		2	(USA) (CDN)
(26)	911 631 957 00	lens side turn signal		2	(DK)(N)(I) (J)
27	911 631 918 00	oval-head sheetmetal screw		4	
28	900 025 003 02	washer 5,3		4	
29	N 021 196 1	lock nut M 5		4	
-	999 591 379 02	cable clamp		4	
(32)	911 631 939 00	rear light housing	/L	1	(J)
(32)	911 631 940 00	rear light housing	/R	1	(J)
(32)	901 631 941 00	rear light housing	/L	1	(USA) (CDN)
(32)	901 631 942 00	rear light housing	/R	1	(USA) (CDN)
34	911 631 949 00	lens rear light	/L	1	(J)
(34)	911 631 950 00	lens rear light	/R	1	(J)
(34)	911 631 951 00	lens rear light	/L	1	(USA) (CDN)
(34)	911 631 952 00	lens rear light	/R	1	(USA) (CDN)
35	911 631 971 01	gasket rear light	/L	1	
(35)	911 631 971 00	gasket rear light	/R	1	
36	999 507 312 12	captive nut M 5		4	
37	911 631 432 03	covering with reflector		1	
37A	999 591 447 02	cage		10	

- -- E N D -- -

Model	Year	MG	SG	Illustration	Restrictions	Update	11:43	18.08.2006	PORSCHE PET PORSCHE
911	83	9	05	905-05		203			

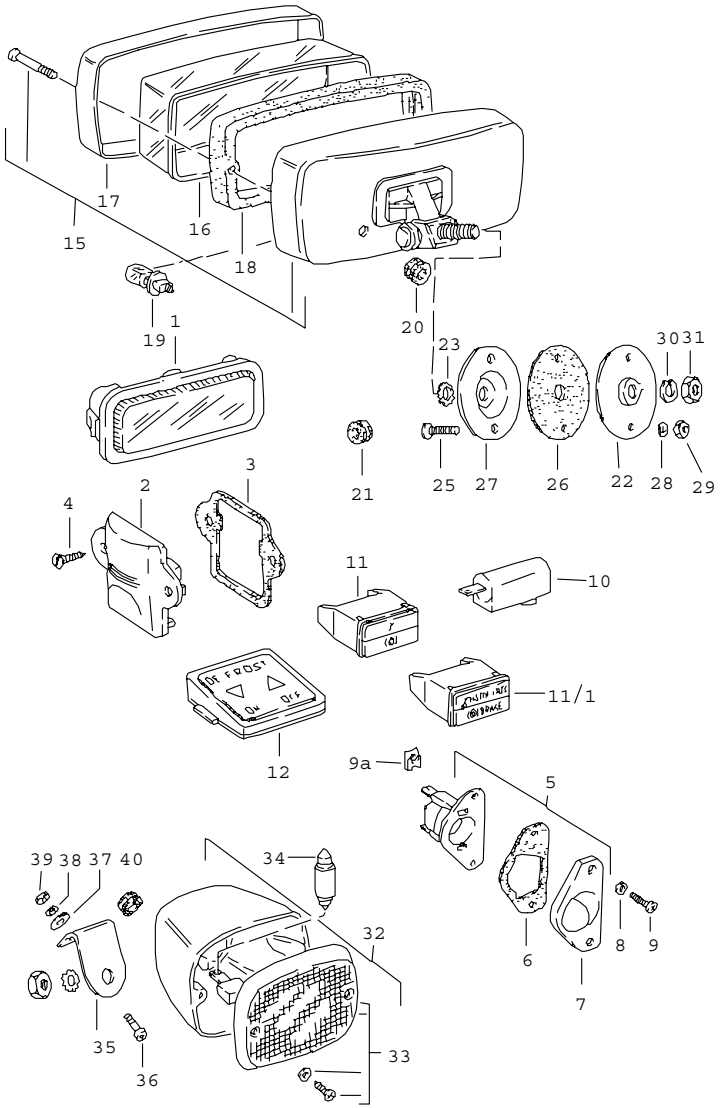

Pos	Part Number	Name	Remarks	Qty	Model
		interior lights fog headlamp			
1	901 632 101 28	interior light		2	SC,COUPE
(1)	901 632 101 28	interior light		2	TURBO
(1)	911 632 102 00	light		1	TARGA
-	964 555 153 00	desk pad interior light 901.632.101.00		2	SC,COUPE
2	901 632 201 01	luggage boot lamp		1	
3	901 632 291 00	desk pad luggage boot lamp		1	
4	N 013 961 2	tapping screw B 3,9 X 13		2	
5	911 631 620 04	license plate light		2	
6	911 631 608 00	gasket license plate light		2	
7	911 631 606 00	lens		2	
8	911 631 604 00	sealing washer		4	
(9)	900 143 116 07	oval-head sheetmetal screw B 3,5 X 22		4	
9A	911 505 339 00	speed nut BG 3,5		4	
-	999 591 381 02	cable clamp		2	
10	911 632 904 00	ashtray light		1	
11	911 632 013 03	indicator light double seat belt brake		1	(J)
11/1	911 632 013 04	indicator light double seat belt brake		1	(USA) (CDN)
-	911 632 116 01	grommet for indicator light double		1	(J)
-	900 631 132 90	bulb 12 V - 1,2 W		1	(USA) (CDN)

Pos	Part Number	Name	Remarks	Qty	Model
12	914 632 107 00	light lever heating		1	(USA) (CDN)
-	N 013 954 1	tapping screw B 2,9 X 13 for 914.632.107.00		1	(USA) (CDN)
15	911 631 206 03	fog headlamp housing black		2	
16	911 631 964 00	light-diffusing lens for 911.631.206.03		2	
17	911 631 959 28	ring for fog headlamp black		2	
18	911 631 956 00	gasket		2	
19	900 631 126 90	halogen bulb H 3		2	
20	999 702 084 50	rubber sleeve		2	
21	911 612 132 00	rubber sleeve		2	
22	911 631 060 01	tensioning plate inner		2	
23	900 114 011 01	shake-proof washer A 10,5		2	
25	900 067 009 02	pan-head screw M 6 X 16		4	
26	911 631 151 01	rubber base		2	
27	911 631 150 01	tensioning plate outer		2	
28	N 012 226 5	spring washer A 6		4	
29	900 076 010 02	hexagon nut M 6		4	
30	900 027 016 02	lock ring B 10		2	
31	900 027 015 02	lock ring M 10		2	
-	911 631 315 01	engine compartment lamp bulb		1	
-	999 631 127 90	headlamp unit "SEALED BEAM" 12 V - 60/50 W		2	(USA) (CDN)
-	900 631 109 90	bulb 12 V - 45/40 W		2	(J)
-	900 631 126 90	halogen bulb H 3		2	
-	900 631 103 90	bulb 12 V - 4 W		2	(DK)(N)(I)(J
-	900 631 115 90	bulb 12 V - 10 W		1	
-	900 631 106 90	linolite lamp 12 V - 10 W		3	
-	900 631 102 90	bulb 12 V - 2 W	-80	X	
-	900 631 127 90	bulb 12 V - 21 W		2	(J)
-	900 631 128 90	bulb 12 V - 21/5 W		2	(J)
-	900 631 132 90	bulb	81-	X	
-	900 631 132 90	bulb 12 V - 1,2 W		X	
-	900 631 123 90	linolite lamp 12 V - 18 W		2	(J)
-	900 631 104 90	bulb 12 V - 5 W		2	(J)
-	999 631 115 90	bulb 12 V - 32/3 CP		4	(USA) (CDN)
-	900 631 127 90	bulb 12 V - 32 CP		4	(USA) (CDN)

- -- E N D -- -

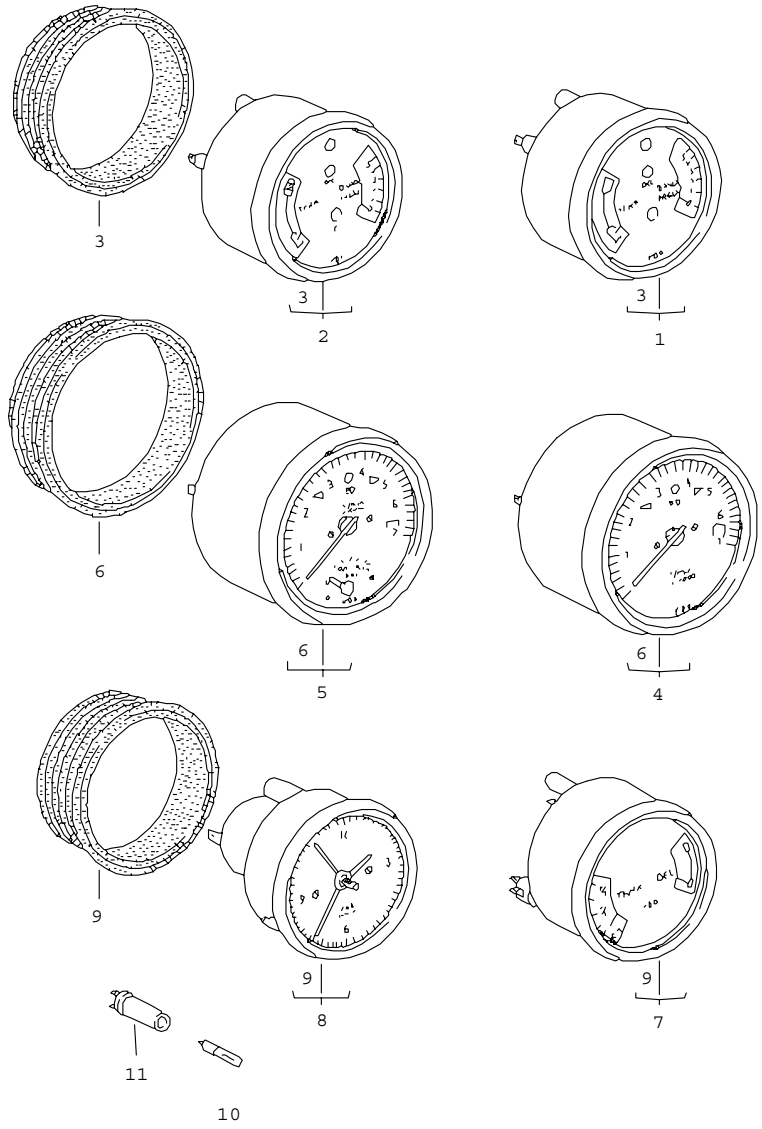

Pos	Part Number	Name	Remarks	Qty	Model
		instruments			
1	911 641 103 03	instrument cluster 100 $	-81	1	
(1)	911 641 103 04	instrument cluster 100 $	-81	1	(J)
(1)	911 641 923 00	instrument cluster 100 $	82-	1	
2	911 641 105 03	instrument cluster 100 $	SPM	1	
3	911 641 902 00	rubber ring 100 $		2	
4	911 641 301 03	tachometer 115 $		1	SC
5	930 641 302 01	tachometer with boost pressure gauge 115 $		1	TURBO
6	911 641 903 00	rubber ring 115 $		2	
7	911 641 202 03	instrument cluster 80 $		1	
8	911 641 701 29	clock 80 $		1	
9	911 641 901 00	rubber ring 80 $		2	
10	900 631 102 90	bulb for illumination 12 V 2 W	-80	X	
-	900 631 132 90	bulb	81-	X	
-	900 631 103 90	bulb indicator light generator	82-	1	
11	999 632 007 00	bulb holder - 1 - terminal clamp		X	
(11)	999 632 009 10	bulb holder small - 2 - terminal clamp		1	

Pos	Part Number	Name	Remarks	Qty	Model	Pos	Part Number	Name	Remarks	Qty	Model
(11)	999 632 002 00	bulb holder - 2 - terminal clamp	82-	1							
-	911 612 047 00	wiring harness for illumination instruments		1							
-	999 652 161 10	tubular rivet for 999.632.003.00		8							
		- -- E N D -- -									

Model	Year	MG	SG	Illustration	Restrictions	Update	11:43	18.08.2006	PORSCHE PET PORSCHE
911	83	9	06	906-05		203			

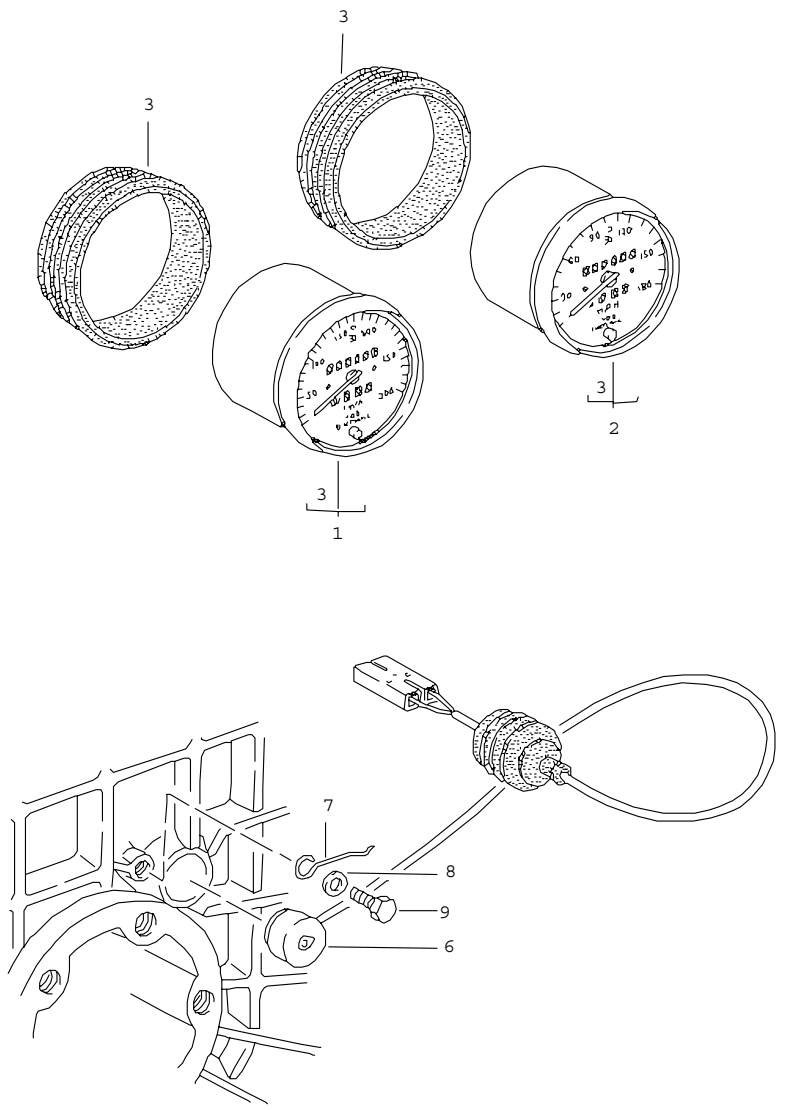

Pos	Part Number	Name	Remarks	Qty	Model
		speedometer			
(1)	911 641 516 01	speedometer 250 KM/H		1	SC
1	930 641 507 01	speedometer 300 KM/H		1	TURBO
(1)	911 641 537 04	speedometer 250 KM/H with warning indicator		1	SC (J)
1	911 641 539 00	speedometer 300 KM/H with warning indicator		1	TURBO (J)
2	A 930 641 508 00	speedometer 150 MPH	-79	1	
2	911 641 517 00	speedometer 170 MPH + 270 KM/H		1	(USA)
3	911 641 902 00	rubber ring 100 $		4	
6	911 606 209 00	pulse sender		1	
7	915 660 509 00	tensioning spring		1	
8	N 011 524 7	washer 6,4		1	
9	999 072 005 09	hexagon-head bolt M 6 X 12		1	
-	911 612 406 01	cable holder		1	
-	900 093 010 02	grooved nail 3 X 8		1	
-	999 513 002 40	tie-wrap		1	TURBO
		- -- E N D -- -			

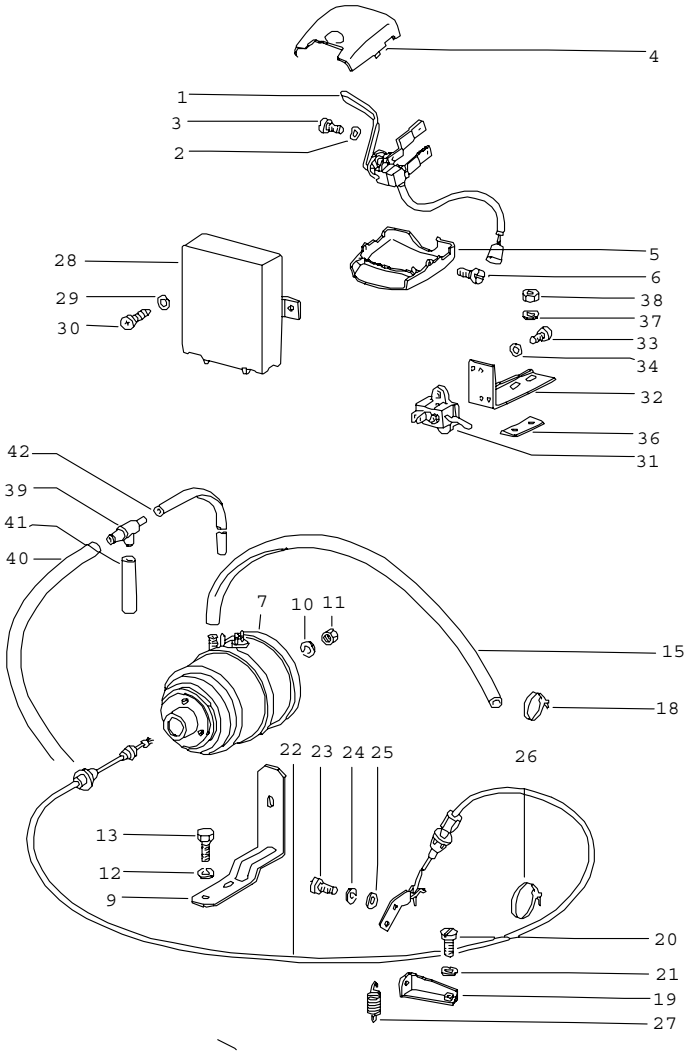

Pos	Part Number	Name	Remarks	Qty	Model
		cruise control			
1	911 613 102 01	switch		1	
2	900 115 007 01	serrated lock washer 3,2		2	
3	900 014 079 02	pan-head screw M 3 X 10		2	
4	911 613 311 02	switch housing upper part		1	
5	911 613 312 02	switch housing lower part		1	
6	900 014 079 02	pan-head screw M 3 X 10		2	
7	911 617 123 02	drive link cruise control		1	
9	911 617 127 00	support		1	
10	900 027 015 02	lock ring B 8		1	
11	900 076 025 02	hexagon nut M 8		1	
12	N 012 006 4	lock ring B 6		2	
13	999 072 005 09	hexagon-head bolt M 6 X 12		2	
-	N 020 359 1	hose C 9 X 15		*	
15	-	670 MM		1	
18	999 513 010 40	tie-wrap 140 MM long		1	
19	911 110 226 00	retaining bracket		1	
20	900 071 005 02	oval-head screw M 5 X 10		1	
21	N 012 222 4	spring washer B 5		1	
22	911 617 124 01	bowden cable	-80	1	
(22)	911 617 124 02	bowden cable	81-	1	

Pos	Part Number	Name	Remarks	Qty	Model
23	N 014 128 13	oval-head screw M 5 X 8		2	
24	N 012 005 3	lock ring A 5		2	
25	900 025 003 02	washer A 5,3		2	
26	999 513 010 40	tie-wrap 250 MM long		2	
27	911 110 227 00	gas prop		1	
28	928 617 127 00	cruise control regulator		1	
29	N 012 222 4	spring washer B 5	/LL	2	
30	999 217 008 02	hexagon-head bolt M 5 X 10	/LL	2	
31	911 613 411 00	stop light switch		1	
32	911 613 131 00	support		1	
33	900 146 011 02	oval-head screw M 4 X 10		2	
34	900 114 014 01	shake-proof washer A 4,3		2	
36	911 613 132 00	plate		1	
37	N 012 226 5	spring washer B 6		2	
38	900 076 010 02	hexagon nut M 6		2	
(39)	999 137 004 40	t-socket		1	
-	N 020 353 5	hose 3,5 X 7,5		*	
40	-	130 MM		1	
41	-	600 MM		1	
42	-	680 MM		1	
-	911 612 157 07	wiring harness cruise control regulator tunnel	/LL	1	
-	911 612 157 06	wiring harness cruise control regulator tunnel	/RL	1	
-	911 612 158 01	wiring harness tunnel drive link		1	
-	911 612 156 02	wiring harness		1	SPM

- -- E N D -- -

Model	Year	MG	SG	Illustration	Restrictions	Update				
911	83	9	07	907-05		203	11:44	18.08.2006	PORSCHE	PET	PORSCHE

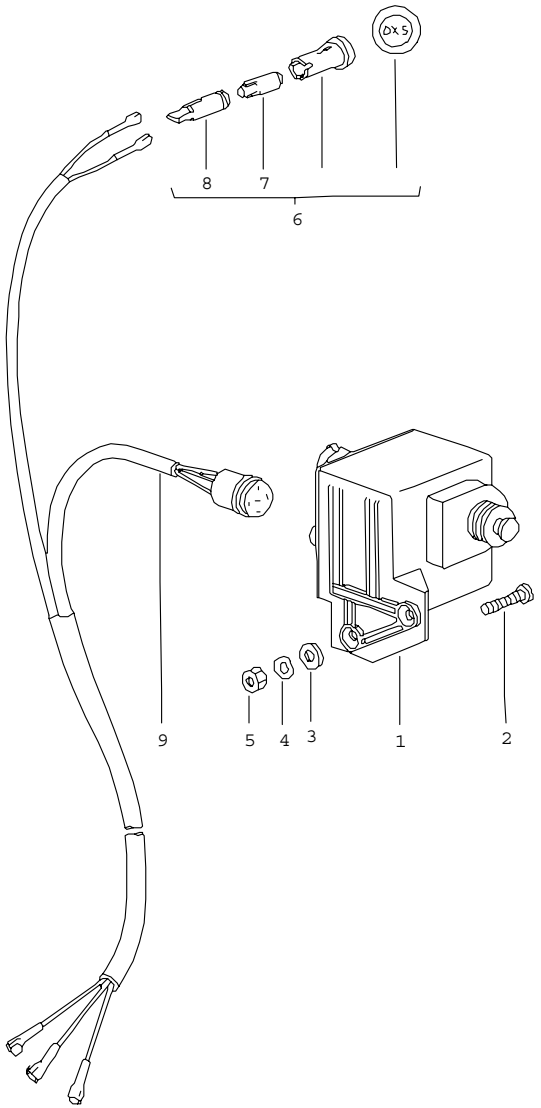

Pos	Part Number	Name	Remarks	Qty	Model
		counter switch			
1	911 641 225 02	counter switch		1	
2	N 014 133 8	oval-head screw AM 5 X 12		2	
3	900 025 003 02	washer 5,3		2	
4	N 012 222 4	spring washer B 5		2	
5	N 011 005 14	hexagon nut M 5		2	
6	477 919 209 B	indicator light OXS		1	
7	900 631 132 90	bulb 12 V, 1,2 W		1	
8	111 919 243	bulb holder		1	
9	911 612 149 01	wiring harness counter switch		1	
		- -- E N D -- -			

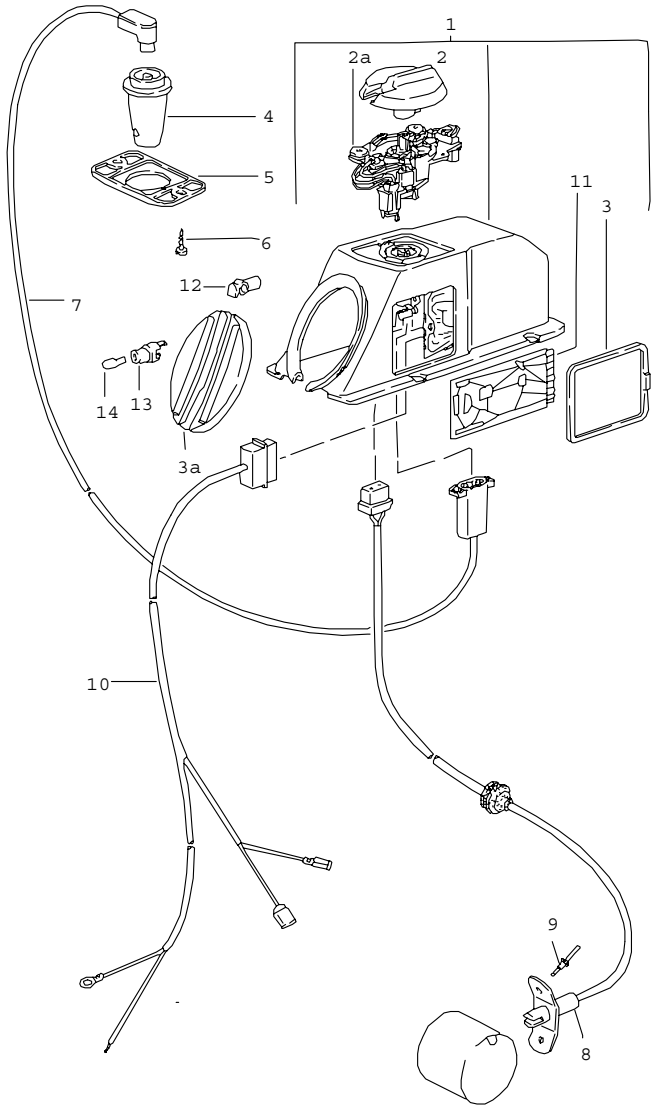

Pos	Part Number	Name	Remarks	Qty	Model
		heating automatic			
1	911 659 049 01	control mechanism		1	
2	911 659 110 00	knob		1	
2A	911 659 908 00	switch		1	
3	911 659 108 00	cover		2	
3A	911 424 591 05	sleeve		1	
4	911 659 105 01	interior sensor		1	
5	911 571 235 01	rose		1	
6	900 143 065 07	tapping screw B 2,9 X 9,5		2	
7	911 612 150 00	wiring harness interior sensor		1	
8	911 659 101 00	caloric feeler		1	
-	-	connecting piece see group 2/02/00			
9	999 190 129 02	blind rivet		2	
10	911 612 152 00	wiring harness	/LL	1	
-	N 012 225 2	spring washer B 5		4	
-	900 075 154 07	hexagon-head bolt M 5 X 18		4	
11	911 659 058 02	printed circuit board		1	
12	999 168 021 40	ball socket		2	
13	914 631 179 10	bulb holder		1	
14	900 631 132 90	bulb 12 V - 1,2 W		1	
		- -- E N D -- -			

Model	Year	MG	SG	Illustration	Restrictions	Update				
911	83	9	09	909-00		203	11:44	18.08.2006	PORSCHE	PET	PORSCHE

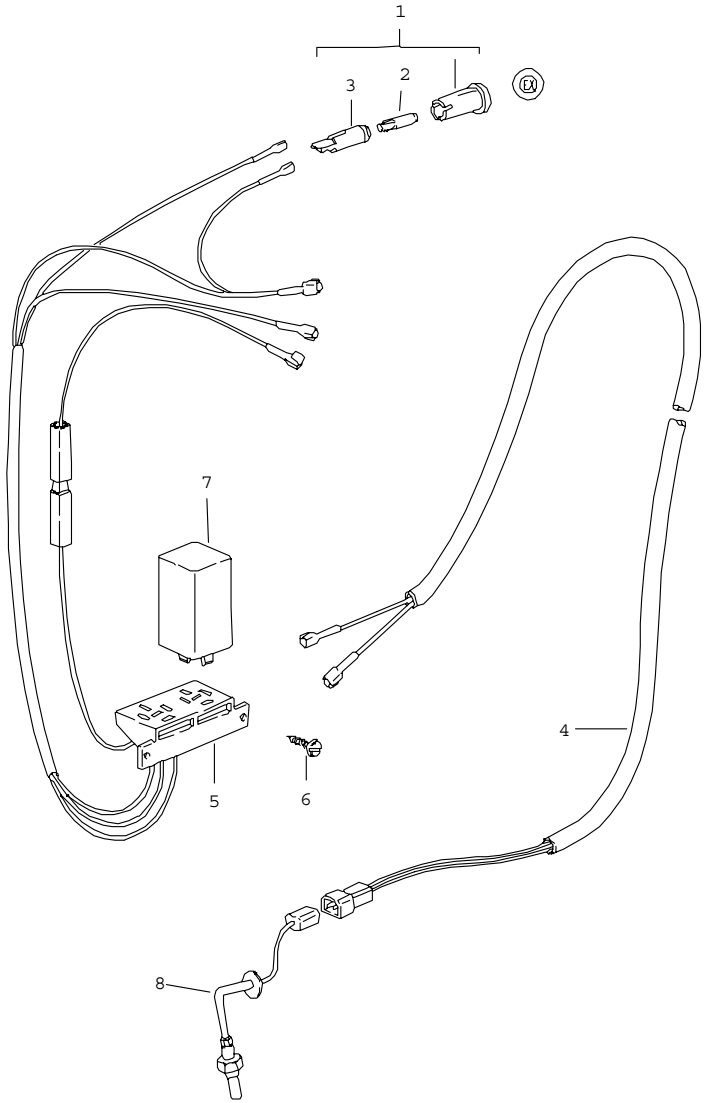

Pos	Part Number	Name	Remarks	Qty	Model
		temperature monitoring exhaust gas			(J)
1	911 632 015 01	indicator light EX		1	
2	900 631 132 90	bulb		1	
3	111 919 243	bulb holder		1	
4	930 612 171 00	wiring harness temperature sensor		1	
5	930 612 169 00	wiring harness indicator light EX		1	
6	N 013 970 5	tapping screw B 4,8 X 9,5		1	
7	911 617 119 00	switch unit temperature monitoring		1	SC
(7)	043 906 086	switch unit temperature monitoring		1	TURBO
8	-	see group 2/02/00		1	SC
(8)	-	see group 2/02/00		1	TURBO
		- -- E N D -- -			

Model	Year	MG	SG	Illustration	Restrictions	Update	11:44	18.08.2006	PORSCHE PET PORSCHE
911	83	9	10	910-00		203			

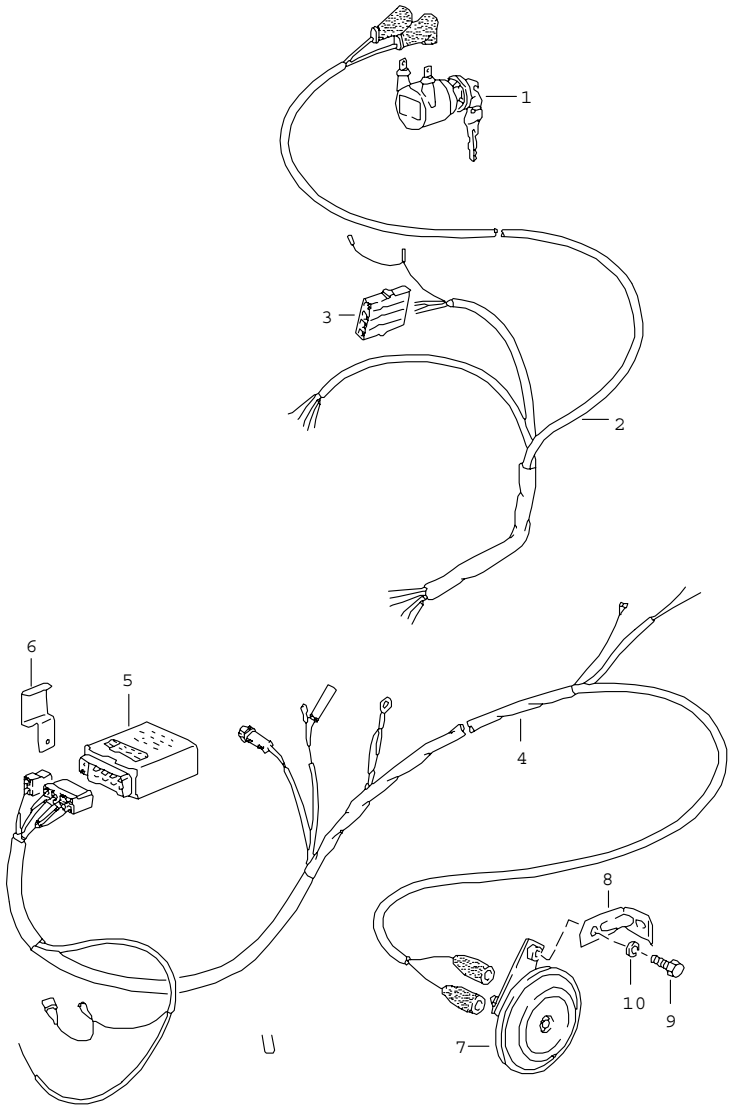

Pos	Part Number	Name	Remarks	Qty	Model
		alarm system left-hand drive			
1	911 637 101 00	alarm switch with 2 key		1	
2	911 612 163 02	wiring harness	/L	1	
(2)	911 612 165 02	wiring harness	/L	1	
3	111 971 977	plug with guide		1	
4	911 612 176 01	wiring harness		1	
5	911 637 104 00	control unit		1	
6	911 637 117 00	support		1	
7	944 637 103 01	horn		1	
8	911 635 093 00	retaining bracket		1	
9	N 010 239 11	hexagon-head bolt M 8 X 18		1	
10	900 027 015 02	lock ring B 8		1	
		- -- E N D -- -			

Model	Year	MG	SG	Illustration	Restrictions	Update		
911	83	9	98	998-00		203	11:45	18.08.2006

Pos	Part Number	Name	Remarks	Qty	Model
		repair kits			
>>	> 911 628 997 00	headlight washer system	-79	1	
		1 set			
		for subsequent installat.			
		comprising:			
		water reservoir		1	
		hose			
		10 X 14			
		330 MM		1	
		hose			
		10 X 12,5			
		480 MM		1	
		780 MM		1	
		hose			
		4 X 6			
		1000 MM		1	
		hose		1	
		hose		1	
		pump		1	
		valve		1	
		hose clamp		1	
		hose clamp		2	
		grommet		1	
		grommet		1	
		pressure control valve		2	
		leaf spring		2	
		nozzle		1	
		nozzle		1	
		desk pad		1	
		desk pad		1	
		distributing piece		1	
		fuse box		1	
		triple			
		oval-head screw		2	
		M 4 X 12			
		switch		1	
		control unit		1	
		wiring harness		1	
		mounting		1	
		mounting		1	
		clip		2	
		connecting rail		1	

Model	Year	MG	SG	Illustration	Restrictions	Update		
911	83	9	98	998-00		203	11:45	18.08.2006

Pos	Part Number	Name	Remarks	Qty	Model
>>	> 911 628 997 01	headlight washer system 1 set for subsequent installat. comprising:	80-	1	
		jet carrier		2	
		hexagon nut		2	
		valves		2	
		motor pump		1	
		gasket		1	
		wiring harness NR. 179		1	
		wiring harness NR. 76		1	
		relay		1	
		switch		1	
		hose 10 X 16 350 MM		1	
		230 MM		1	
		hose 10 X 12,5 380 MM		1	
		480 MM		1	
		hose connection		1	
		distributing piece		1	
		hose clamp		4	
		hose clamp		4	
		cable strap		1	
		cable strap		1	
		spring washer A 5		1	
		oval-head sheetmetal screw 4,8 X 9,5		1	
>>	> 911 631 993 00	fog headlamp white 1 set for subsequent installat. comprising:		1	
-	911 631 206 03	fog headlamp white		2	
-	999 702 084 50	rubber sleeve		2	
-	911 612 132 00	rubber sleeve		2	
-	900 114 011 01	shake-proof washer A 10,5		2	
-	911 631 060 01	tensioning plate outer		2	
-	911 631 151 01	rubber base		2	
-	911 631 150 01	tensioning plate inner		2	
-	900 067 009 02	pan-head screw M 6 X 16		4	

Model	Year	MG	SG	Illustration	Restrictions	Update		
911	83	9	98	998-00		203	11:45	18.08.2006

Pos	Part Number	Name	Remarks	Qty	Model
-	N 012 226 5	spring washer A 6		4	
-	900 076 010 02	hexagon nut M 6		4	
-	900 027 016 02	lock ring B 10		2	
-	N 011 010 6	hexagon nut M 10		2	
-	911 612 027 03	additional cables		1	
-	901 612 064 00	ground cable		1	
-	901 612 066 02	wiring harness for switch		1	
-	911 615 109 01	standard type relay		1	
-	902 613 623 90	switch		1	
-	999 703 067 50	grommet		1	
-	911 613 213 02	rose		1	
-	900 631 132 90	bulb 12 V - 2 W		1	
-	911 613 215 02	knob		1	
		- -- E N D -- -			

M000 ! SUMMARY OF OPTIONAL EXTRAS "M"!
M020 SPEEDOMETER WITH TWO SCALES MPH-KM/H
M026 WITH ACTIVATED CHARCOAL CANISTER
M027 VERSION FOR CALIFORNIA
M034 VERSION FOR ITALY
M058 IMPACT ABSORBERS FRONT AND REAR
M062 VERSION FOR SWEDEN
M113 VERSION FOR CANADA
M124 VERSION FOR FRANCE
M157 EXHAUST GAS RECIRCULATION,
M157 AIR PUMP AND CATALYST -79
M157 THREE-BED CATALYST,
M157 OXYGEN SENSOR, L-JETRONIC 80
M157 AIR PUMP, THREE-BED CATALYST,
M157 OXYGEN SENSOR, CENTRAL COLD
M157 START INJECTION, L-JETRONIC 81-
M186 SEAT BELT FOR BACK SEATS
M187 HEADLAMPS WITH SEALED-BEAM
M187 INSERT "ASYMMETRIC"
M190 INCREASED SIDE DOOR STRENGTH
M193 VERSION FOR JAPAN
M197 STRONGER BATTERY
M220 LOCKING DIFFERENTIAL 40 %
M249 AUTOMATIC TRANSMISSION
M261 OUTSIDE MIRROR - PLAIN - PASSENGER'S SIDE,
M261 ELECTRICALLY ADJUSTABLE AND HEATABLE
M406 928 S - ANNIVERSARY CAR 82
M406
M406 CONSTRUCTIONS"
M406 LACQUER: METEORMETALLIC
M406 INTERIOR EQUIPMENT: BURGUNDY
M409 SPORT SEATS, LEATHER
M410 SPORT SEATS, SEAT AND BACKREST SURFACE
M410 CLOTH/LEATHERETTE
M418 SIDE PROTECTION MOLDINGS
M437 COMFORT SEAT LEFT,
M437 ELECTRICALLY ADJUSTABLE
M438 COMFORT SEAT RIGHT,
M438 ELECTRICALLY ADJUSTABLE
M462 928 - SPECIAL MODEL 82
M462 WEISSACH
M462 LACQUER: HELLBRONCE-METALLIC
M462 INTERIOR EQUIPMENT: LEATHER-
M462 MEDIUM BROWN
M467 OUTSIDE MIRROR FOR DRIVER'S SIDE, CONVEX,
M467 ELECTRICALLY HEATABLE AND ADJUSTABLE
M473 WITH FRONT SPOILER AND REAR SPOILER
M474 SHOCK ABSORBER (SPORTING) FRONT AND REAR
M479 VERSION FOR AUSTRALIA
M484 SYMBOLS AND INSIGNIAS
M484 FOR SWITCHES AND INSTRUMENTS

M489	SWITCHES AND INSIGNIAS IN GERMAN LANGUAGE
M492	FOR LEFT-HAND TRAFFIC
M494	ADDITIONAL AMPLIFIER
M528	OUTER REAR VIEW MIRROR FOR PASSENGER'S SIDE
M528	- CONVEX - ELECTRICALLY HEATABLE AND ADJUSTABLE
M533	ANTI-THEFT DEVICE
M553	VERSION FOR USA, CANADA
M563	AIRBAG - PASSENGER'S SIDE
M568	TINTED SIDE GLASSES AND TINTED WINDSHIELD
M573	AIR CONDITIONER
M650	ELECTRICAL SLIDING ROOF
M981	LEATHER EQUIPMENT

TR203

THIS PARTS CATALOGUE CONTAINS ALL ORDER INFORMATION OF
TYPE 911 FROM MODEL YEAR 1978 TO MODEL YEAR 1983

IT IS AVAILABLE IN TWO EDITIONS IN THE FOLLOWING LANGUAGES:

EDITION
USA, CANADA - *

EDITION
ALL OTHER COUNTRIES - GERMAN

* - ENGLISH

- FRENCH

- ITALIAN

- SPANISH

UPDATING IS BEING PERFORMED BY CHANGING OF UPDATE.

THE EDITION CAN BE RECOGNIZED BY THE CURRENT NO.
YEAR IN THE BOTTOM LINE OF SUBJECT UPDATE.

THE PREVIOUS UPDATE SHOULD NO LONGER BE USED.

ALL ILLUSTRATIONS ARE SUBJECT TO CHANGE WITHOUT OBLIGATION.

"WE RESERVE THE RIGHT TO SUPPLY A SUBSEQUENTLY
PRODUCED COMPONENT, ON WHICH ADDITIONAL WORK
IS NECESSARY, INSTEAD OF THE COMPONENT LISTED IN
THE CATALOGUE"

ALL ILLUSTRATIONS ARE SUBJECT TO
CHANGE WITHOUT OBLGATION.

TR006

```
     EXPLANATION OF THE ABRIDGED VERSION OF THE VEHICLE IDENT. NUMBERS (VIN)
     ======================================================================
     USED IN THE CATALOGUE
     =====================


     --->MOD.79
     ==========

      DIGIT:                          1 2 3   4   5   6 7 8 9 10

      EXAMPLE:                        9 1 1   9   3   0 0 2 5 3
                                      =====   =   =   =========
                                        !     !   !       !
 VEHICLE TYPE--------------------------+     !   !       !
                                             !   !       !
 MODEL YEAR----------------------------------+   !       !
                                                 !       !
 CODE FOR BODY AND ENGINE------------------------+       !
                                                         !
 SERIAL NUMBER-------------------------------------------+


     MOD.80--->
     ==========

      DIGIT:            1 2 3   4 5 6   7 8  9  10  11  12  13 14 15 16 17

      EXAMPLE:          W P O   Z Z Z   9 1  Z   D   S   1   0  0  3  1  6
                                        ===      =   =   =   =============
                                         !       !   !   !         !
 VEHICLE TYPE 1ST+2ND DIGIT--------------+       !   !   !         !
                                                 !   !   !         !
 MODEL YEAR------------------------------------+   !   !         !
                                                     !   !         !
 MANUFACTURING LOCATION------------------------------+   !         !
                                                         !         !
 VEHICLE TYPE 3RD DIGIT----------------------------------+         !
                                                                   !
 SERIAL NUMBER-----------------------------------------------------+
```

Model	Year	MG	SG	Illustration	VIN No.	Update	11:46	18.08.2006
911	83	9	98	998		203		

FR203

VEHICLE TYPE	MY		VIN		ENGINE TYPE	
911 SC COUPE	78	8	91183	00001>10000	930.03/13	132KW
911 SC TARGA	78	8	91183	10001>>	930.03/13	132KW
911 TURBO	78	8	93087	00001>>	930.60	221KW
911 SC COUPE (USA)(CDN)(CAL)	78	8	91182	00001>10000	930.04/06	132KW
911 SC TARGA (USA)(CDN)(CAL)	78	8	91182	10001>>	930.04/06	132KW
911 TURBO (USA)(CDN)(CAL)	78	8	93088	00001>>	930.61/63	195KW
911 SC COUPE (J)	78	8	91183	09501>19500	930.05/15	132KW
911 SC TARGA (J)	78	8	91183	19501>>	930.05/15	132KW
911 TURBO (J)	78	8	93087	09501>>	930.62	195KW
911 SC COUPE	79	9	91193	00001>10000	930.03/13	132KW
911 SC TARGA	79	9	91193	10000>>	930.03/13	132KW
911 TURBO	79	9	93097	00001>>	930.60	221KW
911 SC COUPE (USA)(CDN)(CAL)	79	9	91192	00001>10000	930.04/06	132KW
911 SC TARGA (USA)(CDN)(CAL)	79	9	91192	10001>>	930.04/06	132KW
911 TURBO (USA)(CDN)(CAL)	79	9	93098	00001>>	930.64/63	195KW
911 SC COUPE (J)	79	9	91193	09501>>	930.05/15	132KW
911 SC TARGA (J)	79	9	91193	19501>>	930.05/15	132KW
911 TURBO (J)	79	9	93097	09501>>	930.65	195KW
911 SC	80	A	91A01	30001>39999	930.09/19	138KW
911 TURBO	80	A	93A00	70001>79999	930.60	221KW
911 SC (USA)(CDN)	80	A	91A01	40001>49999	930.07	132KW
911 SC (J)	80	A	91A01	30001>39999	930.08	132KW
911 TURBO (J)	80	A	93A00	70001>79999	930.65	195KW
911 SC COUPE	81	B	91BS1	00001>05000	930.10	150KW
911 SC TARGA	81	B	91BS1	40001>45000	930.10	150KW
911 TURBO	81	B	93BS0	00001>02000	930.60	221KW
911 SC COUPE (USA)(CDN)	81	B	91BS1	20001>25000	930.16	132KW
911 SC TARGA (USA)(CDN)	81	B	91BS1	60001>65000	930.16	132KW
911 TURBO (CDN)	81	B	93BS0	50001>52000	930.60	221KW
911 SC COUPE (J)	81	B	91BS1	29500>29999	930.17	132KW
911 SC TARGA (J)	81	B	91BS1	69500>69999	930.17	132KW
911 SC COUPE	82	C	91CS1	00001>05000	930.10	150KW
911 SC TARGA	82	C	91CS1	40001>45000	930.10	150KW
911 TURBO	82	C	93CS0	00001>02000	930.60	221KW
911 SC COUPE (USA)(CDN)	82	C	91CS1	20001>25000	930.16	132KW
911 SC TARGA (USA)(CDN)	82	C	91CS1	60001>65000	930.16	132KW
911 TURBO (CDN)	82	C	93CS0	50001>52000	930.60	221KW
911 SC COUPE (J)	82	C	91CS1	09500>09999	930.17	132KW
911 SC TARGA (J)	82	C	91CS1	49500>49999	930.17	132KW
911 SC COUPE	83	D	91DS1	00001>05000	930.10	150KW
911 SC TARGA	83	D	91DS1	40001>45000	930.10	150KW
911 SC CABRIO	83	D	91DS1	50001>55000	930.10	150KW
911 TURBO	83	D	93DS0	00001>02000	930.66	221KW
911 SC COUPE (USA)(CDN)	83	D	91DS1	20001>25000	930.16	132KW
911 SC TARGA (USA)(CDN)	83	D	91DS1	60001>65000	930.16	132KW
911 SC CABRIO (USA)(CDN)	83	D	91DS1	70001>75000	930.16	132KW
911 TURBO (CDN)	83	D	93DS0	50001>52000	930.66	221KW
911 SC (J)	83	D	91DS1	09501>09999	930.17	132KW
911 SC TARGA (J)	83	D	91DS1	49501>49999	930.17	132KW
911 SC CABRIO (J)	83	D	91DS1	59501>59999	930.17	132KW

T

```
EXPLANATION OF THE MOTOR-NUMBERS USED IN THE CATALOGUE
======================================================

--->MOD.81
==========

DIGIT:                                          1 2 3   4 5 6 7

EXAMPLE:                                        6 3 1   0 2 5 3
                                                = = =   =======
                                                ! ! !       !
ENGINE TYPE (6 = 6-CYL.-ENGINE)-----------------+ ! !       !
                                                  ! !       !
ENGINE VERSION-----------------------------------+ !       !
                                                    !       !
MODEL YEAR---------------------------------------+       !
                                                         !
SERIAL NUMBER-----------------------------------------------+


MOD.82--->
==========

DIGIT:                                          1 2 3   4 5 6 7 8

EXAMPLE:                                        6 3 D   0 2 5 3 4
                                                = = =   =========
                                                ! ! !        !
ENGINE TYPE (6 = 6-CYL.-ENGINE)-----------------+ ! !        !
                                                  ! !        !
ENGINE VERSION-----------------------------------+ !        !
                                                    !        !
MODEL YEAR---------------------------------------+        !
                                                          !
SERIAL NUMBER-----------------------------------------------+
```

Model	Year	MG	SG	Illustration	VIN No.	Update	11:46	18.08.2006
911	83	9	98	998		203		

MR203

VEHICLE TYPE	ENGINE TYPE	MY	ENGINE NO.	TECHNICAL DATA
911 SC	930.03	78	8 638 0001>9000	6-ZYL/3,0L/132KW
911 SC SPM	930.13	78	8 638 9001>>	6-ZYL/3,0L/132KW
911 TURBO	930.60	78	8 678 0001>>	6-ZYL/3,3L/221KW
911 SC (USA)(CDN)	930.04	78	8 628 0001>>	6-ZYL/3,0L/132KW
911 TURBO (USA)(CDN)	930.61	78	8 688 0001>>	6-ZYL/3,3L/195KW
911 SC (CAL)	930.06	78	8 658 0001>>	6-ZYL/3,0L/132KW
911 TURBO (CAL)	930.63	78	8 688 1001>>	6-ZYL/3,3L/195KW
911 SC (J)	930.05	78	8 618 0001>9000	6-ZYL/3,0L/132KW
911 SC SPM	930.15	78	8 618 9001>>	6-ZYL/3,0L/132KW
911 TURBO	930.62	78	8 678 2001>>	6-ZYL/3,3L/195KW
911 SC	930.03	79	9 639 0001>9000	6-ZYL/3,0L/132KW
911 SC SPM	930.13	79	9 639 9001>>	6-ZYL/3,0L/132KW
911 TURBO	930.60	79	9 679 0001>>	6-ZYL/3,3L/221KW
911 SC (USA)(CDN)	930.04	79	9 629 0001>>	6-ZYL/3,0L/132KW
911 TURBO (USA)(CDN)	930.64	79	9 689 0001>>	6-Z>L/3,3L/195KW
911 SC (CAL)	930.06	79	9 659 0001>>	6-ZYL/3,0L/132KW
911 TURBO (CAL)	930.63	79	9 689 1001>2000	6-ZYL/3,3L/195KW
911 SC (J)	930.05	79	9 619 0001>9000	6-ZYL/3,0L/132KW
911 SC SPM	930.15	79	9 619 9001>>	6-ZYL/3,0L/132KW
911 TURBO (J)	930.65	79	9 679 1001>2000	6-ZYL/3,3L/195KW
911 SC	930.09	80	A 630 0001>8000	6-ZYL/3,0L/138KW
911 SPM	930.19	80	A 630 9001>9999	6-ZYL/3,0L/138KW
911 TURBO	930.60	80	A 670 0001>1000	6-Z>L/3,3L/221KW
911 SC (USA)(CDN)	930.07	80	A 640 0001>9999	6-ZYL/3,0L/132KW
911 SC (J)	930.08	80	A 630 8001>9000	6-ZYL/3,0L/132KW
911 TURBO (J)	930.65	80	A 670 8001>9000	6-ZYL/3,3L/195KW
911 SC	930.10	81	B 631 0001>8000	6-ZYL/3,0L/150KW
911 TURBO	930.60	81	B 671 0001>1000	6-ZYL/3,3L/221KW
911 SC (USA)(CDN)	930.16	81	B 641 0001>9999	6-ZYL/3,0L/132KW
911 TURBO (CDN)	930.60	81	B 671 0001>1000	6-ZYL/3,3L/221KW
911 SC (J)	930.17	81	B 631 8001>9000	6-ZYL/3,0L/132KW
911 SC	930.10	82	C 63C 0001>8000	6-ZYL/3,0L/150KW
911 TURBO	930.60	82	C 67C 0001>1000	6-ZYL/3,3L/221KW
911 SC (USA)(CDN)	930.16	82	C 64C 0001>9999	6-ZYL/3,0L/132KW
911 TURBO (CDN)	930.60	82	C 67C 0001>1000	6-ZYL/3,3L/221KW
911 SC	930.17	82	C 63C 8001>9000	6-ZYL/3,0L/132KW
911 SC	930.10	83	D 63D 0001>8000	6-ZYL/3,0L/150KW
911 TURBO	930.66	83	D 67D 0001>1000	6-ZYL/3,3L/221KW
911 SC (USA)(CDN)	930.16	83	D 64D 0001>9999	6-ZYL/3,0L/132KW
911 TURBO (CDN)	930.66	83	D 67D 0001>1000	6-ZYL/3,3L/221KW
911 SC (J)	930.17	83	D 63D 8001>9000	6-ZYL/3,0L/132KW

```
T
    EXPLANATION OF THE TRANSMISSION-NUMBERS USED IN THE CATALOGUE
    =============================================================

    --->MOD.81
    ==========

    DIGIT:                                          1 2 3   4 5 6 7

    EXAMPLE:                                        7 3 1   0 3 5 5
                                                    = = =   =======
                                                    ! ! !       !
    TRANSMISSION TYPE--------------------------------+ !       !
                                                      ! !       !
    TRANSMISSION VERSION-----------------------------+ !       !
                                                         !       !
    MODEL YEAR---------------------------------------------+       !
                                                                   !
    SERIAL NUMBER-------------------------------------------------+


    MOD.82--->
    ==========

    DIGIT:                                          1 2 3   4 5 6 7 8

    EXAMPLE:                                        7 3 D   0 2 5 3 4
                                                    = = =   =========
                                                    ! ! !        !
    TRANSMISSION TYPE--------------------------------+ !        !
                                                      ! !        !
    TRANSMISSION VERSION-----------------------------+ !        !
                                                         !        !
    MODEL YEAR---------------------------------------------+        !
                                                                    !
    SERIAL NUMBER-------------------------------------------------+
```

Model	Year	MG	SG	Illustration	VIN No.	Update	11:46	18.08.2006
911	83	9	98	998		203		

GR203

VEHICLE TYPE	TRANSM. TYPE	MY	TRANSMISSION NO.	TECHNICAL DATA
911 SC	915.61	78 8	718 0001>>	5-SPEED
911 SC SPM	925.16	78 8	768 0001>>	3-SPEED
911 TURBO	930.34	78 8	778 0001>>	4-SPEED
911 SC	915.61	79 9	719 0001>>	5-SPEED
911 SC SPM	925.16	79 9	769 0001>>	3-SPEED
911 TURBO	930.34	79 9	779 0001>>	4-SPEED
911 SC	915.62	80 A	730 0001>9999	5-SPEED
911 SC SPM	925.16	80 A	760 0001>2000	3-SPEED
911 TURBO	930.34	80 A	770 0001>2000	4-SPEED
911 SC (USA)(CDN)	915.63	80 A	740 0001>9999	5-SPEED
911 SC (J)	915.62	80 A	730 0001>9999	5-SPEED
911 SC	915.62	81 B	731 0001>9999	5-SPEED
911 TURBO	930.34	81 B	771 0001>2000	4-SPEED
911 SC (USA)(CDN)	915.63	81 B	741 0001>9999	5-SPEED
911 SC	915.62	82 C	73C 0001>9999	5-SPEED
911 TURBO	930.34	82 C	77C 0001>2000	4-SPEED
911 SC (USA)(CDN)(J)	915.63	82 C	74C 0001>9999	5-SPEED
911 SC	915.62	83 D	73D 0001>9999	5-SPEED
911 TURBO	930.34	83 D	77D 0001>2000	4-SPEED
911 SC (USA)(CDN)(J)	915.63	83 D	74D 0001>9999	5-SPEED

TR201

LEGENDS AND NOTICES

IN COLUMN -S- STATUS

N	NEW ADDITION
P	PART ALREADY IN PROGRAMME, BUT NEW AT THIS APPLICATION
W	DELETED AT THIS APPLICATION, BUT CONTINUED TO BE CARRIED
A	STOCK TO BE USED UP
U	DELETED WITHOUT REPLACEMENT
*	PART ALSO OR ONLY AVAILABLE IN REPAIR KIT
>	ALSO AVAILABLE IN EXCHANGE

IN COLUMN - ILL. -

1	IDENTIFICATION NO. IN ILLUSTRATION
(1)	PART ONLY SIMILAR AS ILLUSTRATED
-	PART IS NOT ILLUSTRATED

FIG.-NUMBERS FOR WHICH THERE IS SHOWN NO TEXT ARE NOT VALID FOR THIS EDITION OF CATALOGUE

IN COLUMN -PART NUMBER/CODE-

000 000 000 00	PART NUMBER EQUALS ORDERING NO., IF A CODE IS SHOWN, IT WILL HAVE TO BE PART OF ORDERING NUMBER
AC3	COLOUR CODE

IN COLUMN -TEXT

INSTALLATION WIRH ENGINE OR CHASSIS NUMBER-RANGE

		EXAMPLE:
M 63D 01291 >>		FROM ENGINE NO.
F	>> 91 DS1 01291	UP TO VIN

TR201

```
                    IN COLUMN  - A -
                    ----------------

                    IDENTIFICATION LETTER FOR PERIOD OF INSTALLATION
                    THAT IS REPEATED SEVERAL TIMES IN THE CATALOG GROUP.

                    EXPLANATION PLEASE FIND IN TEXT COLUMN OF THE CATALOG GROUP


                    IN COLUMN   - QU -   = NO. OF PIECES
                    ------------------------------------

          1         NUMBER PER APPLICATION

          X         NUMBER AS NEEDED

          *         AVAILABLE ONLY IN RUNNING LENGTHS   1 = 1 METRE


                    IN COLUMN   - MODEL/SYMBOL -
                    ----------------------------

        M650        OPTIONAL EQUIPMENT  -  SEE M-NO. LIST

         -83        LIMITATION OF MODEL YEAR FOR INSTANCE: VALID UP TO
                    END OF MODEL YEAR 1983

        /LL         LHD

        /RL         RHD
                    ---------+
        /V          FRONT    I
                             I
        /H          REAR     I
                             I---> APPLIES TO
        /L          LEFT     I     DIRECTION OF TRAVEL
                             I
        /R          RIGHT    I
                    ---------+

       SPM          SPORTOMATIC

        WW          THE PART CAN BE USED INSTEAD OF THE
                    PRECEDING ONE
```

TR206

EQUIPMENT BY COUNTRY REGULATIONS

(A)	AUSTRIA
(AUS)	AUSTRALIA
(B)	BELGIUM
(CDN)	CANADA
(CH)	SWITZERLAND
(D)	FEDERAL REPUBLIC OF GERMANY
(DK)	DENMARK
(E)	SPAIN
(F)	FRANCE
(GB)	GREAT BRITAIN
(GR)	GREECE
(HK)	HONGKONG
(I)	ITALY
(J)	JAPAN
(L)	LUXEMBURG
(N)	NORWAY
(NL)	NETHERLANDS
(NS)	NEW ZEALAND
(P)	PORTUGAL
(RS)	TAIWAN
(S)	SWEDEN
(SA)	SAUDI ARABIA
(SF)	FINLAND
(USA)	UNITED STATES OF AMERICA